TECHNICAL PROCEDURE

AIRTEK® for Mack Vehicles

SUBJECT: Service Instructions
LIT NO: 17730-250
DATE: November 2010 REVISION: B

TABLE OF CONTENTS

Section 1 Introduction 2

Section 2 Product Description 2

Section 3 Important Safety Notice 5

Section 4 Special Tools 9

Section 5 Parts List 10

Section 6 Towing Procedure 15

Section 7 Preventive Maintenance
- Component Inspection 19
- Clamp Group Re-torque Interval 20
- Lubrication Intervals 21
- Kingpin Lubrication 21
- Tie Rod End Lubrication 22
- Tie Rod End Inspection 23
- Tire Inspection 25
- Shock Absorber Inspection 27
- Thrust Washer Inspection 28
- Kingpin Bushing Inspection 29
- Steering Knuckle Inspection 30
- Axle Wrap Inspection 30

Section 8 Alignment and Adjustments
- Alignment Definitions 31
- Inspection Prior to Alignment 34
- Front Wheel Alignment 35
- Ride Height Verification - Post '07 Engine 36
- Dual Ride Height Verification - 3/05 to 12/07 . . 36
- Single Ride Height Verification - Prior to 3/05 . . 39
- Steering Stop 41
- Toe Setting 41
- Spring Eye Re-torque 43

Section 9 Component Replacement
- Fasteners 45
- Height Control Valve 45
- Air Spring (12K/12.5K pounds Capacity) 47
- Air Spring (13.5K/14.6K pounds Capacity) . . . 49
- Rubber Axle Stop 50
- Front Leaf Spring Hanger 51
- Shackle Bracket 51
- Thrust Washers 52
- Leaf Spring 53
- Front and Rear Spring Eye Bushings 56
- Shock Absorber 56
- Bottom Axle Wrap 57
- Top Axle Wrap 58
- Front Axle Assembly 61
- Steertek Axle Removal 62
  - Steertek Axle (removed from chassis) 63
  - Steering Knuckle Disassembly 66
  - Kingpin Measurement & Preparation 67
  - Kingpin Bushing Removal 69
  - Steering Knuckle Bore Measurement 70
  - Kingpin Bushing Installation 70
  - Kingpin Bushing Reaming 71
  - Kingpin Seal Installation 72
  - Steering Knuckle Assembly 73
- Tie Rod End and Cross Tube 75
- Single to Dual HCV Conversion 76

Section 10 Plumbing Diagrams 80

Section 11 Troubleshooting Guide 82

Section 12 Torque Specifications 84

Section 13 Front Wheel Alignment Specs 86

Section 14 Reference Material 87

HENDRICKSON
The World Rides On Us®

SECTION 1

Introduction

This publication is intended to acquaint and assist maintenance personnel in the preventive maintenance, service, repair, and rebuild for the following Hendrickson equipment as installed on applicable Mack Vehicles:

- AIRTEK® — An Integrated front air suspension with the STEERTEK axle.
- STEERTEK — A durable, lightweight, fabricated steer axle assembly.

NOTE

Use only Hendrickson Genuine Parts for servicing this suspension system.

It is important to read and understand the entire Technical Procedure publication prior to performing any maintenance, service, repair, or rebuild of this product. The information in this publication contains parts lists, safety information, product specifications, features, proper maintenance, service, repair and rebuild instructions for the AIRTEK Suspension and the STEERTEK axle.

Hendrickson reserves the right to make changes and improvements to its products and publications at any time. Contact Hendrickson Tech Services at toll-free 1-866-755-5968 or email techservices@hendrickson-intl.com for information on the latest version of this manual.

The latest revision of this publication is also available online at www.hendrickson-intl.com.

SECTION 2

Product Description

FIGURE 2-1

AIRTEK SUSPENSION — Capacity: 12,000, 12,500, 13,200, and 14,600 pounds
Suspension Weight: 268 lbs. for 12,000/12,500 pounds capacity and 280 pounds for 13,200/14,600 pounds capacity.
Not including the axle, weight may vary with ride height or with frame height.

STEERTEK — Axle Weight: 286 pounds for 12,000/12,500 pounds capacity and 307 pounds for 13,200/14,600 pounds capacity. Weight may vary with ride height.
Axle Rating: 12,000, 12,500, 13,200, and 14,600 pounds
Axle Drop: 4.25"

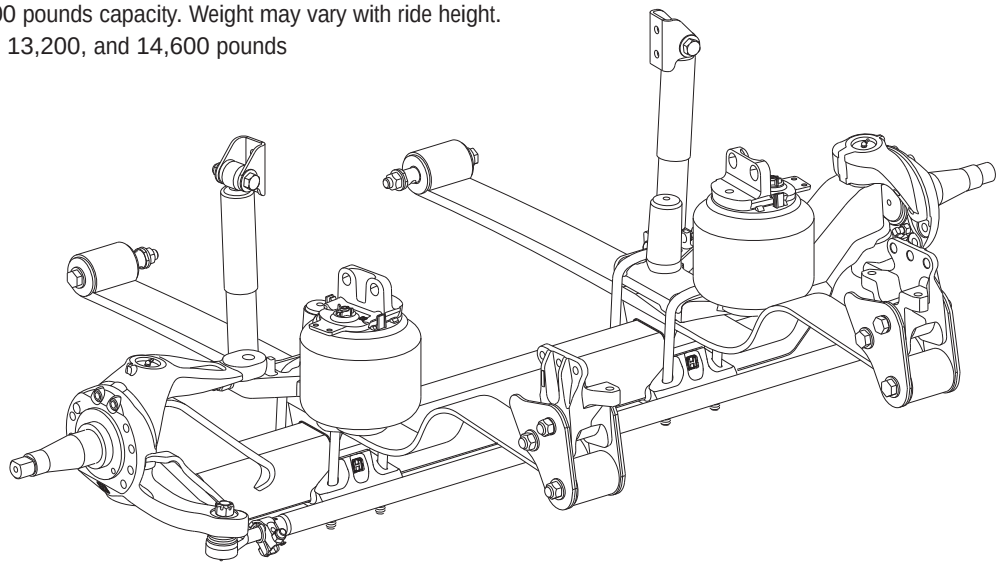

AIRTEK® — Winner of the 2001 Automotive News and Cap Gemini Ernst & Young PACE Award for Product Innovation. AIRTEK is an integrated front air suspension and fabricated steer axle that work together to form an integrated torsion system. This lightweight system provides driver comfort and is ideal for a variety of applications including on-highway line and bulk haul operations. Utilizing a system approach, Hendrickson has engineered and optimized the following components to form a system delivering unmatched ride, stability, and handling characteristics with reduced weight and maintenance.

Air Springs — Exclusive to Hendrickson, the lightweight air springs deliver an extremely soft ride. The air springs are engineered to support 80% of the vertical load while providing a very low spring rate. The quick "snap" design (12,000 and 12,500 pound capacity), bolt on design (13,200 & 14,600 pound capacity) and "push-to-connect" air supply design (all models) also provide fast and easy removal and installation.

Leaf Spring Assembly — With its innovative design, the leaf spring provides superior stability, performance and a soft ride. The patented leaf spring shares loads with the air spring. Durable rubber front and rear bushings are greaseless and only require periodic inspections.

Shock Absorbers — AIRTEK utilizes premium shocks that have been tested and tuned specifically for the AIRTEK system.

Shackle Brackets — Optimized design delivers weight reduction and proven durability.

STEERTEK — Integrated into the AIRTEK system, the box-shaped design provides a stiffer axle and resists torsional, longitudinal, and vertical loads more effectively than traditional axle beams. Together with the front limbs of the leaf springs, the fabricated axle beam forms a torsion system, enhancing roll stability characteristics and improving handling.

Axle clamp group — The axle-friendly clamp group provides four-sided clamping pressure. The Clamp Group consists of the following:

- Top Axle Wrap
- Top Axle Wrap Liner
- Top Pad
- Bottom Axle Wrap
- Bottom Axle Wrap Liner
- M20 Bolts, Washers and Locknuts

Adjustable tie rod — To help maximize tire life, the tie rod easily adjusts toe-in/out.

Steering knuckles — The steering and tie rod arms are integrated for increased strength and reduced weight. The unique steering knuckle packaging delivers a maximum of 50° wheel cut. The two piece knuckle design makes servicing the kingpin bushings easier by eliminating the need to remove the kingpins.

TECHNICAL NOTES

1. AIRTEK is approved for 100% on-highway usage with up to 15 percent operation on unpaved secondary roads. All applications must comply with applicable Hendrickson specifications and must also be approved by the respective vehicle manufacturer with the vehicle in its original, as-built configuration. Contact Hendrickson and the respective vehicle manufacturer for approval of additional applications. This system has 12,000, 12,500, 13,200, and 14,600 pound capacities. System capacity represents maximum loads on tires at ground level.
2. The STEERTEK axle is available with 70.87" Kingpin Intersections (KPI).
3. The STEERTEK axle offers 4.25" axle beam drop height. Axle beam drop is measured from the kingpin intersection to the top of the axle beam.
4. AIRTEK suspension weight includes shackle bracket assemblies, main springs, bushings, air springs and air spring bracket, height control system, shocks, upper shock brackets and axle clamp group.
5. STEERTEK axle weight is based on a 4.25" drop height and a 70.87" KPI. Axle weight includes, the axle beam, knuckle/steering arm assemblies and tie rod assemblies.
6. AIRTEK is integral to and available exclusively with the STEERTEK axle. This system is anti-lock braking system (ABS) ready. STEERTEK is compatible with most industry standard wheel ends and brakes; contact OEM for more information.
7. Suspension capacity can be determined two different ways.
   a. Suspension capacity is indicated by the third digit in the axle part number, which can be found on the product identification tag located on the center front side of the axle. The axle part number is an eight-digit number in the form of ABCDE-XYZ. If the third digit (position C) is a “2”, the suspension is rated at 12,000 or 12,500 pounds. A “4” indicates a rating of 13,200 or 14,600 pounds, see Figure 2-2.
   b. Suspension capacity can also be determined by the air spring part number, which is molded into the flexible rubber member of the air spring. 66349-002L indicates a 12,000 or 12,500 pounds rating, and 60716-002 indicates a 13,200 or 14,600 pounds rating.

FIGURE 2-2 Front view of STEERTEK axle showing approximate location of Product Identification.

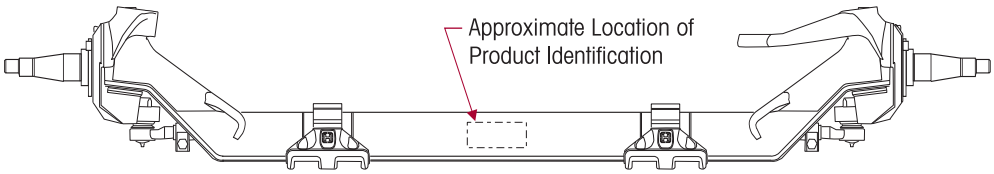

8. Frame Rail Height — The AIRTEK suspension is available with two different frame rail heights, 266 mm and 300 mm. To determine the vehicle frame rail height, measure the bottom to the top of the frame rail flange.

SECTION 3

Important Safety Notice

Proper maintenance, service, and repair is important for the reliable operation of the suspension. The procedures recommended by Hendrickson and described in this technical publication are methods of performing such maintenance, service and repair.

The warnings and cautions should be read carefully to help prevent personal injury and to assure that proper methods are used. Improper maintenance, service or repair may damage the vehicle, cause personal injury, render it unsafe in operation, or void manufacturer's warranty.

Failure to follow the safety precautions in this manual can result in personal injury and/or property damage. Carefully read and understand all safety related information within this publication, on all decals and in all such materials provided by the vehicle manufacturer before conducting any maintenance, service or repair.

EXPLANATION OF SIGNAL WORDS

Hazard "Signal Words" (Danger-Warning-Caution) appear in various locations throughout this publication. Information accented by one of these signal words must be observed to help minimize the risk of personal injury to service personnel, or possibility of improper service methods which may damage the vehicle or render it unsafe.

This is the safety alert symbol. It is used to alert you to potential personal injury hazards. Obey all safety messages that follow this symbol to avoid possible injury or death.

Additional Notes or Service Hints are utilized to emphasize areas of procedural importance and provide suggestions for ease of repair. The following definitions indicate the use of these signal words as they appear throughout the publication.

DANGER — INDICATES AN IMMINENTLY HAZARDOUS SITUATION WHICH, IF NOT AVOIDED, WILL RESULT IN SERIOUS INJURY OR DEATH.

WARNING — INDICATES A POTENTIAL HAZARDOUS SITUATION WHICH, IF NOT AVOIDED, COULD RESULT IN SERIOUS INJURY OR DEATH.

CAUTION — INDICATES A POTENTIAL HAZARDOUS SITUATION WHICH, IF NOT AVOIDED, MAY RESULT IN MINOR OR MODERATE INJURY, OR PROPERTY DAMAGE.

NOTE — An operating procedure, practice condition, etc. which is essential to emphasize.

SERVICE HINT — A helpful suggestion that will make the servicing being performed a little easier and/or faster.

Also note that particular service operations may require the use of special tools designed for specific purposes. These special tools can be found in the Special Tools Section of this publication.

The torque symbol alerts you to tighten fasteners to a specified torque value. Refer to Torque Specifications Section of this publication.

SAFETY PRECAUTIONS

WARNING

FASTENERS

DISCARD USED FASTENERS. ALWAYS USE NEW FASTENERS TO COMPLETE A REPAIR. FAILURE TO DO SO COULD RESULT IN FAILURE OF THE PART, OR MATING COMPONENTS, LOSS OF VEHICLE CONTROL, PERSONAL INJURY, OR PROPERTY DAMAGE.

LOOSE OR OVER TORQUED FASTENERS CAN CAUSE COMPONENT DAMAGE, LOSS OF VEHICLE CONTROL, PROPERTY DAMAGE, OR SEVERE PERSONAL INJURY. MAINTAIN CORRECT TORQUE VALUE AT ALL TIMES. CHECK TORQUE VALUES ON A REGULAR BASIS AS SPECIFIED, USING A REGULARLY CALIBRATED TORQUE WRENCH. TORQUE VALUES SPECIFIED IN THIS TECHNICAL PUBLICATION ARE FOR HENDRICKSON SUPPLIED FASTENERS ONLY. IF NON HENDRICKSON FASTENERS ARE USED, FOLLOW TORQUE SPECIFICATION LISTED IN THE VEHICLE MANUFACTURER'S SERVICE MANUAL.

DANGER

AIR SPRINGS

AIR SPRING ASSEMBLIES MUST BE DEFLATED PRIOR TO LOOSENING ANY CLAMP GROUP HARDWARE. UNRESTRICTED AIR SPRING ASSEMBLIES CAN VIOLENTLY SHIFT. DO NOT INFLATE AIR SPRING ASSEMBLIES WHEN THEY ARE UNRESTRICTED. AIR SPRING ASSEMBLIES MUST BE RESTRICTED BY SUSPENSION OR OTHER ADEQUATE STRUCTURE. DO NOT INFLATE BEYOND PRESSURES RECOMMENDED BY AIR SPRING MANUFACTURER, CONTACT HENDRICKSON TECHNICAL SERVICES FOR DETAILS. IMPROPER USE OR OVER INFLATION MAY CAUSE AIR SPRING ASSEMBLIES TO BURST, CAUSING PROPERTY DAMAGE AND/OR SEVERE PERSONAL INJURY.

WARNING

WHEN SERVICING THE VEHICLE OR ATTACHING AN AIR SPRING AND THE VEHICLE IS ON THE GROUND, PRIOR TO AIRING THE SUSPENSION SYSTEM MAKE CERTAIN THE AIR SPRING LOCATOR IS INDEXED INTO THE UPPER AIR SPRING BRACKET PROPERLY, AND THE AIR SPRING IS FULLY SEATED ON THE TOP PAD. FAILURE TO FOLLOW THESE INSTRUCTIONS CAN RESULT IN PREMATURE AIR SPRING FAILURE, CAUSE PERSONAL INJURY, OR PROPERTY DAMAGE.

WARNING

PRIOR TO AND DURING DEFLATION AND INFLATION OF THE FRONT AIR SUSPENSION SYSTEM, ENSURE THAT ALL PERSONNEL AND EQUIPMENT ARE CLEAR FROM UNDER THE VEHICLE AND AROUND THE SERVICE AREA, FAILURE TO DO SO CAN CAUSE SERIOUS PERSONAL INJURY, DEATH, OR PROPERTY DAMAGE.

WARNING

LOAD CAPACITY

ADHERE TO THE PUBLISHED CAPACITY RATINGS FOR THE SUSPENSIONS. ADD-ON AXLE ATTACHMENTS AND OTHER LOAD TRANSFERRING DEVICES (I.E. SLIDING FIFTH WHEELS) CAN INCREASE THE SUSPENSION LOAD ABOVE THE RATED AND APPROVED CAPACITIES WHICH CAN RESULT IN FAILURE AND LOSS OF VEHICLE CONTROL, POSSIBLY CAUSING PERSONAL INJURY OR PROPERTY DAMAGE.

WARNING

SHOCK ABSORBERS

THE SHOCK ABSORBERS ARE THE REBOUND TRAVEL STOPS FOR THE AIR SPRINGS. ANYTIME THE FRONT AXLE ON AN AIRTEK SUSPENSION IS SUSPENDED IT IS MANDATORY THAT THE SHOCK ABSORBERS REMAIN CONNECTED. FAILURE TO DO SO CAN CAUSE THE AIR SPRINGS TO EXCEED THEIR MAXIMUM LENGTH, POSSIBLY CAUSING THE AIR SPRINGS TO SEPARATE FROM THE PISTON, OR CAUSE A REVERSE ARCH IN THE STEEL LEAF SPRINGS, POSSIBLY RESULTING IN PREMATURE STEEL LEAF SPRING FAILURE.

WARNING

REPAIR OR RECONDITIONING

THE REPAIR OR RECONDITIONING OF SUSPENSION OR AXLE COMPONENTS IS NOT ALLOWED AS SHOWN ON LABEL IN FIGURE 3-1. ANY SUSPENSION OR AXLE COMPONENTS FOUND TO BE DAMAGED OR OUT OF SPECIFICATIONS MUST BE REPLACED. ALL MAJOR HENDRICKSON COMPONENTS ARE HEAT TREATED AND TEMPERED. AIRTEK COMPONENTS CANNOT BE BENT, WELDED, HEATED, OR REPAIRED WITHOUT REDUCING THE STRENGTH OR LIFE OF THE COMPONENT. FAILURE TO FOLLOW THESE GUIDELINES CAN CAUSE LOSS OF VEHICLE CONTROL, POSSIBLE PERSONAL INJURY, DEATH, OR PROPERTY DAMAGE AND WILL VOID APPLICABLE WARRANTIES.

WARNING

AXLE CAMBER

AXLE CAMBER IS NOT ADJUSTABLE. DO NOT CHANGE THE AXLE CAMBER ANGLE OR BEND THE AXLE BEAM, SEE FIGURE 3-1. BENDING THE AXLE BEAM TO CHANGE THE CAMBER ANGLE CAN DAMAGE THE AXLE AND REDUCE AXLE STRENGTH, WILL VOID HENDRICKSON'S WARRANTY AND CAN CAUSE LOSS OF VEHICLE CONTROL, POSSIBLY CAUSING PERSONAL INJURY OR PROPERTY DAMAGE.

FIGURE 3-1 REPLACE ANY SAFETY DECALS THAT ARE FADED, TORN, MISSING, ILLEGIBLE, OR OTHERWISE DAMAGED. CONTACT HENDRICKSON TO ORDER REPLACEMENT LABELS.

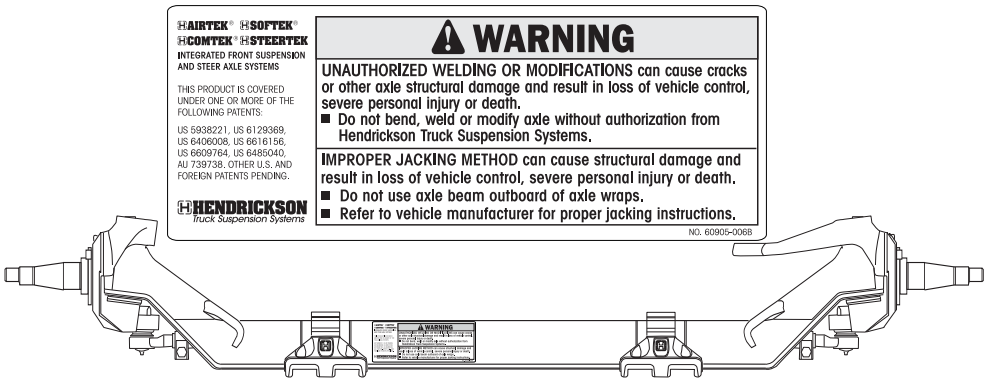

WARNING

AXLE KINGPINS

STEERTEK IS A UNIQUE AXLE, IN THAT THE KINGPIN IS CRYOGENICALLY INSTALLED IN THE AXLE. THE KINGPIN IS A NON-REPLACEABLE COMPONENT OF THE AXLE ASSEMBLY. DO NOT TRY TO REMOVE THE KINGPIN. IF THE KINGPIN SHOWS SIGNS OF MOVEMENT, CONTACT THE HENDRICKSON TECH SERVICES DEPARTMENT.

WARNING

DAMAGED AXLE COMPONENTS

IF A VEHICLE EQUIPPED WITH A STEERTEK AXLE IS INVOLVED IN A CRASH, A THOROUGH INSPECTION OF THE AXLE MUST BE PERFORMED NOTING THE CONDITION OF THE AXLE BEAM, KINGPINS, AND KNUCKLE ASSEMBLIES. IF ANY COMPONENT APPEARS DAMAGED, THE AXLE MUST BE REPLACED. IN THE EVENT THE CRASH RESULTED IN EXCESSIVE SIDE LOAD, SUCH AS A BENT WHEEL, HUB, OR SPINDLE, IT IS STRONGLY RECOMMENDED TO REPLACE THE COMPLETE AXLE ASSEMBLY, CONTACT HENDRICKSON TECHNICAL SERVICES WITH ANY QUESTIONS. FAILURE TO REPLACE ANY DAMAGED COMPONENTS CAN CAUSE LOSS OF VEHICLE CONTROL, POSSIBLE PERSONAL INJURY, DEATH, OR PROPERTY DAMAGE AND WILL VOID APPLICABLE WARRANTIES.

WARNING

MODIFYING COMPONENTS

DO NOT MODIFY OR REWORK PARTS WITHOUT AUTHORIZATION FROM HENDRICKSON. DO NOT SUBSTITUTE OR USE REPLACEMENT COMPONENTS NOT AUTHORIZED BY HENDRICKSON. USE OF MODIFIED, REWORKED, SUBSTITUTE OR REPLACEMENT PARTS NOT AUTHORIZED BY HENDRICKSON MAY NOT MEET HENDRICKSON'S SPECIFICATIONS, AND CAN RESULT IN FAILURE OF THE PART, LOSS OF VEHICLE CONTROL, AND POSSIBLE PERSONAL INJURY OR PROPERTY DAMAGE. USE ONLY HENDRICKSON AUTHORIZED REPLACEMENT PARTS.

WARNING

PERSONAL PROTECTIVE EQUIPMENT

ALWAYS WEAR PROPER EYE PROTECTION AND OTHER REQUIRED PERSONAL PROTECTIVE EQUIPMENT TO HELP PREVENT PERSONAL INJURY WHEN PERFORMING VEHICLE MAINTENANCE, REPAIR OR SERVICE.

WARNING

SUPPORT THE VEHICLE PRIOR TO SERVICING

PLACE THE VEHICLE ON A LEVEL FLOOR AND CHOCK THE WHEELS TO HELP PREVENT THE VEHICLE FROM MOVING. NEVER WORK UNDER A RAISED VEHICLE SUPPORTED BY ONLY A FLOOR JACK. ALWAYS SUPPORT A RAISED VEHICLE WITH SAFETY STANDS. BLOCK THE WHEELS AND MAKE SURE THE UNIT WILL NOT ROLL BEFORE RELEASING BRAKES. A JACK CAN SLIP OR FALL OVER. SERIOUS PERSONAL INJURY CAN RESULT.

WARNING

OFF ROADWAY TOWING

WHEN A VEHICLE IS DISABLED AND EQUIPPED WITH A STEERTEK AXLE, CARE MUST BE TAKEN TO ENSURE THERE IS NO DAMAGE TO THE SUSPENSION OR AXLE WHEN TOWING THE VEHICLE. THE USE OF TOW STRAPS ARE NECESSARY TO TOW A DISABLED VEHICLE INTO A REPAIR FACILITY PARKING LOT INTO THE SHOP BAY. THE TOW STRAPS SHOULD BE CONNECTED TO THE TOW HOOKS PROVIDED BY THE VEHICLE MANUFACTURER AT THE FRONT OF THE BUMPER. IF THE USE OF TOW HOOKS IS NOT AN OPTION, THEN TOW STRAPS MAY BE WRAPPED AROUND THE FRONT STEERTEK AXLE, SEE FIGURE 3-2, IN A MANNER THAT IS ACCEPTABLE FOR TOWING THE VEHICLE FROM A REPAIR FACILITY PARKING LOT INTO THE SHOP BAY. DO NOT USE A TOW CHAIN AROUND THE FRONT STEERTEK AXLE TO TOW THE VEHICLE, DOING SO WILL DAMAGE THE AXLE AND VOID WARRANTY, SEE FIGURE 3-3. FOR DETAILED INSTRUCTIONS FOR ON-HIGHWAY TOWING, SEE TOWING PROCEDURE SECTION OF THIS PUBLICATION.

FIGURE 3-2 ACCEPTABLE

FIGURE 3-3 NOT ACCEPTABLE

CAUTION

PROCEDURES AND TOOLS

A MECHANIC USING A SERVICE PROCEDURE OR TOOL WHICH HAS NOT BEEN RECOMMENDED BY HENDRICKSON MUST FIRST SATISFY HIMSELF THAT NEITHER HIS SAFETY NOR THE VEHICLE'S SAFETY WILL BE JEOPARDIZED BY THE METHOD OR TOOL SELECTED. INDIVIDUALS DEVIATING IN ANY MANNER FROM THE INSTRUCTIONS PROVIDED ASSUME ALL RISKS OF CONSEQUENTIAL PERSONAL INJURY OR DAMAGE TO EQUIPMENT INVOLVED.

WARNING

TORCH/WELDING

DO NOT USE A CUTTING TORCH TO REMOVE ANY FASTENERS. THE USE OF HEAT ON SUSPENSION COMPONENTS WILL ADVERSELY AFFECT THE STRENGTH OF THESE PARTS. A COMPONENT DAMAGED IN THIS MANNER CAN RESULT IN THE LOSS OF VEHICLE CONTROL AND POSSIBLE PERSONAL INJURY OR PROPERTY DAMAGE.

EXERCISE EXTREME CARE WHEN HANDLING OR PERFORMING MAINTENANCE IN THE AREA OF THE SPRING ASSEMBLY AND AXLE. DO NOT CONNECT ARC WELDING GROUND LINE TO THE SPRING ASSEMBLY OR AXLE. DO NOT STRIKE AN ARC WITH THE ELECTRODE ON THE SPRING ASSEMBLY OR AXLE. DO NOT USE HEAT NEAR THE SPRING ASSEMBLY OR AXLE. DO NOT NICK OR GOUGE THE SPRING ASSEMBLY OR AXLE. SUCH IMPROPER ACTIONS CAN DAMAGE THE SPRING ASSEMBLY OR THE AXLE, AND CAN CAUSE LOSS OF VEHICLE CONTROL AND POSSIBLE PERSONAL INJURY OR PROPERTY DAMAGE.

WARNING

PARTS CLEANING

SOLVENT CLEANERS CAN BE FLAMMABLE, POISONOUS AND CAUSE BURNS. TO HELP AVOID SERIOUS PERSONAL INJURY, CAREFULLY FOLLOW THE MANUFACTURER'S PRODUCT INSTRUCTIONS AND GUIDELINES AND THE FOLLOWING PROCEDURES:

1. WEAR PROPER EYE PROTECTION.
2. WEAR CLOTHING THAT PROTECTS YOUR SKIN.
3. WORK IN A WELL-VENTILATED AREA.
4. DO NOT USE GASOLINE, OR SOLVENTS THAT CONTAIN GASOLINE. GASOLINE CAN EXPLODE.
5. HOT SOLUTION TANKS OR ALKALINE SOLUTIONS MUST BE USED CORRECTLY. FOLLOW THE MANUFACTURER'S RECOMMENDED INSTRUCTIONS AND GUIDELINES CAREFULLY TO HELP PREVENT PERSONAL ACCIDENT OR INJURY.

DO NOT USE HOT SOLUTION TANKS OR WATER AND ALKALINE SOLUTIONS TO CLEAN GROUND OR POLISHED PARTS. DOING SO WILL CAUSE DAMAGE TO THE PARTS AND VOID WARRANTY.

SECTION 4

Special Tools

These shop made tools are designed to install and remove kingpin bushings. Bushing tools are made from cold rolled steel or equivalent. Drawings are for reference only. Hendrickson does not supply these tools.

KINGPIN BUSHING TOOLS

Kingpin Bushing Installer

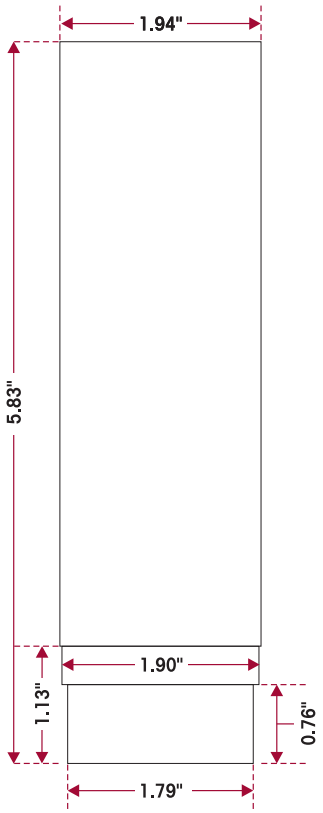

Kingpin Bushing Removar

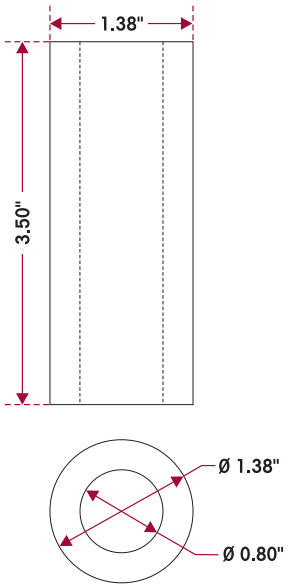

Steering Arm Receiver

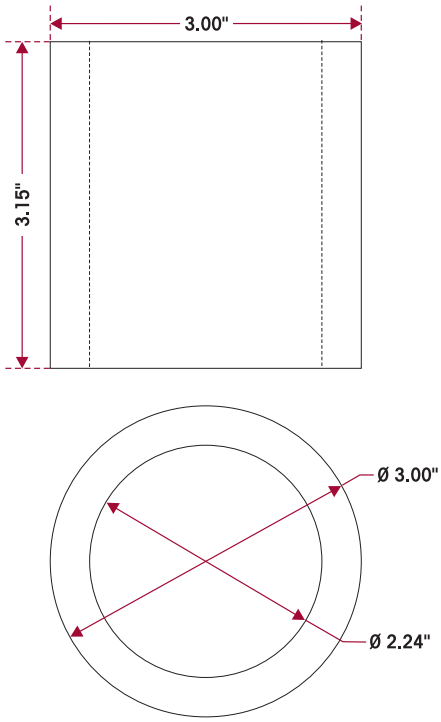

ADJUSTABLE STRAIGHT FLUTE REAMER

The dimension of cutting diameter must facilitate a range of 1.802" – 1.812"

SECTION 5

Parts List

AIRTEK for Mack Vehicles with Post '07 Engine

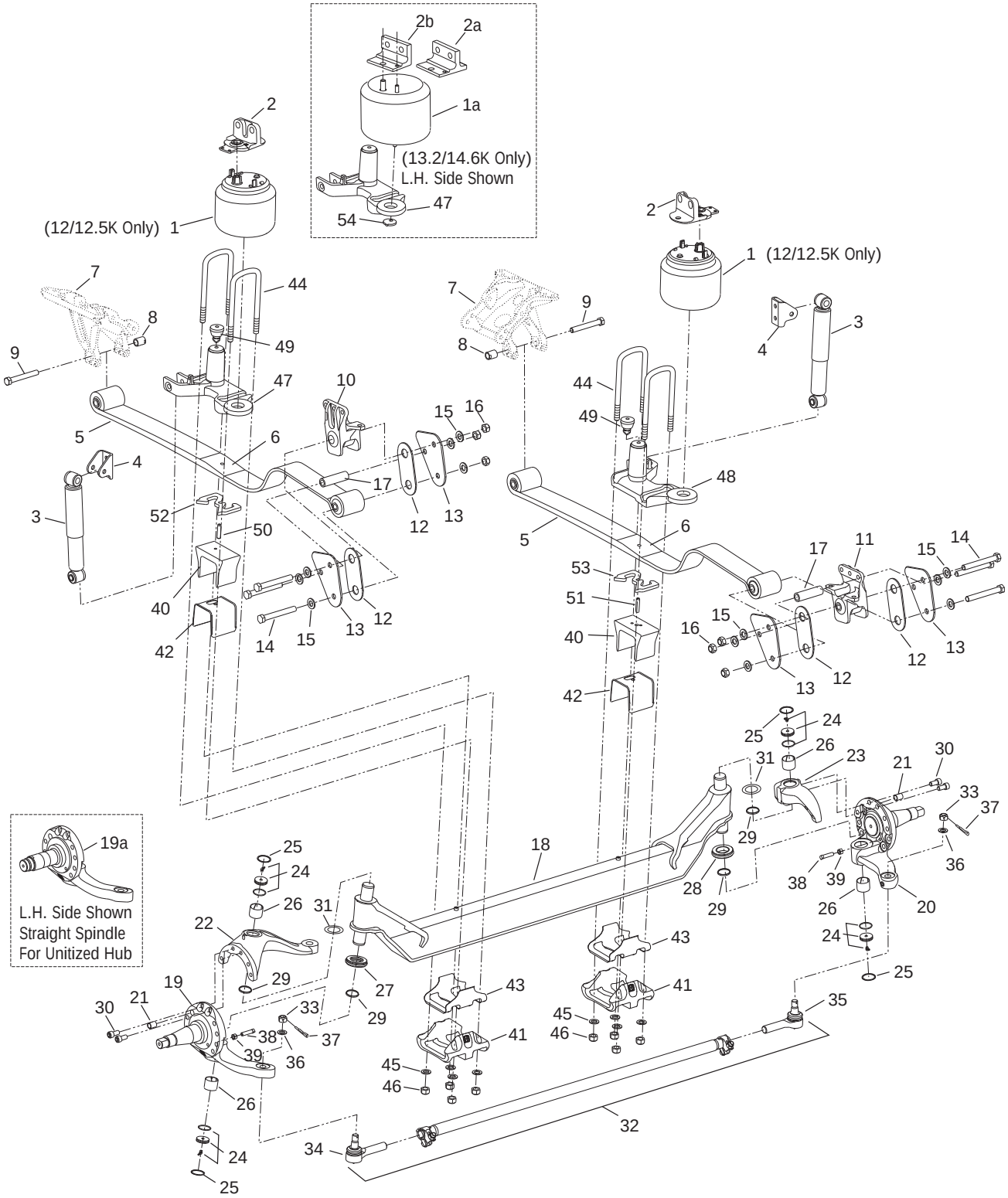

KEY NO.	PART NO.	DESCRIPTION	NO.REQ.
		Air Spring	2
1	66349-002L	12K/12.5K, *Replaces 60750-002L*	
1a	60716-002L	13.2K/14.6K	
2		Air Spring Bracket	2
	60757-000	12K/12.5K 266 Rail	
	60976-000	12K/12.5K 300 Rail	
2a	60738-001	13.2K/14.6K 266 Rail	
2b	60738-002	13.2K/14.6K 300 Rail	
3	64838-003L	Shock Absorber	2
4	64241-001	Upper Shock Bracket	2
	60961-072	Front Leaf Spring Assembly Service Kit, One Side, Includes Key Nos. 5, 13	
5	64772-000	Leaf Spring Assembly with Bushings Includes Key No. 6	2
6		**Steel Galvanized Liner	2
7		*Front Spring Hanger	2
8	64486-000	Inboard Spring Adapter, *Replaces 64162-000*	2
9	58258-009	M20 x 2.5-6G 230 mm Hex Bolt	2
		LH Rear Shackle Bracket Service Kit, One Side Includes Key Nos. 10, 12-17	
	64876-001	266 Frame Rail	
	64800-001	300 Frame Rail	
		RH Rear Shackle Bracket Service Kit, One Side Includes Key Nos. 11-17	
	64876-002	266 Frame Rail	
	64800-002	300 Frame Rail	
10		LH Rear Shackle Bracket w/Bushing (Cast Part No. 64153-001)	1
	64175-001	266 Frame Rail	
	64176-001	300 Frame Rail	
11		RH Rear Shackle Bracket w/Bushing (Cast Part No. 64153-002)	1
	64175-002	266 Frame Rail	
	64176-002	300 Frame Rail	
	60961-034	Shackle Bracket Service Kit, Axle Set, Includes Key Nos. 12-17	
12	64159-000	Thrust Washer	4
13	64794-000	Shackle Plate	4
14	58258-008	M20 x 2.5-6G 160 mm Hex Bolt	6
15	58246-009	M20 Flat Washer	12
16	58259-001	M20 x 2.5-6H Locknut	6
17	60631-000	Shackle Stop Spacer	2
	60952-0XX	STEERTEK Axle Assembly, Includes Key Nos. 18-43	1
18		Axle & Kingpin Assembly, 70.9 KPI	1
		•12K/12.5K	
	64905-001	338/366 mm Ride Ht., 4.25 Drop	
	64905-003	338 mm Ride Ht., 5.36 Drop	
		•13.2K/14.6K	
	64905-005	338/366 mm Ride Ht., 4.25 Drop	
	64905-007	338 mm Ride Ht., 5.36 Drop	
19		LH Lower Steering Knuckle Assembly	1
	58900-007	<190 Ackermann STD Hub	
	58900-009	>190 Ackermann STD Hub	
19a	58900-017	<190 Ackermann Unitized Hub	
19a	58900-019	>190 Ackermann Unitized Hub	
20		RH Lower Steering Knuckle Assembly	1
	58900-008	<190 Ackermann STD Hub	
	58900-010	>190 Ackermann STD Hub	
Not Shown	58900-018	<190 Ackermann Unitized Hub	
Not Shown	58900-020	>190 Ackermann Unitized Hub	
21	64246-000	ABS Sensor Sleeve	2
22		LH Upper Steering Knuckle Assembly	1
	60903-011	338 mm Ride Ht.	
	60903-013	366 mm Ride Ht.	
23	60904-002	RH Upper Steering Knuckle Assembly	1

KEY NO.	PART NO.	DESCRIPTION	NO.REQ.
	60961-040	Kingpin Bushing and Bearing Service Kit, Axle Set, Includes Kit Nos. 60961-009 & 60961-039	
	60961-009	LH Kingpin Bushing w/Composite Thrust Bearing Service Kit, Includes Key Nos. 24-27, 29-31 & Loctite	
	60961-039	RH Kingpin Bushing w/Roller Thrust Bearing Service Kit, Includes Key Nos. 24-26, 28-31 & Loctite	
24	59156-000	Grease Cap Assembly	4
25	58937-000	Retaining Ring	4
26	58909-000	Kingpin Bushing	4
	60961-043	Thrust Bearing Service Kit, Axle Set, Includes Kit Nos. 60961-041 & 60961-042	
	60961-041	LH Composite Thrust Bearing Service Kit, Includes Key Nos. 27, 29-31 & Loctite	
	60961-042	RH Roller Thrust Bearing Service Kit, Includes Key Nos. 28-31 & Loctite	
27	59828-000	LH Composite Thrust Bearing	1
28	64256-000	RH Roller Thrust Bearing	1
29	58910-001	Kingpin Seal, *Replaces 58910-000*	4
30	60236-001	5/8" Socket Head Cap Screw	4
31	60259-002	Kingpin Shim	2
Not Shown	60937-000	Loctite (Red) Compound Tube	1
32		Tie Rod Assembly, Includes Key Nos. 33-37	1
		12K/12.5K	
	60239-001	<190 Ackermann, *Replaces 64801-002*	
	60239-002	>190 Ackermann, *Replaces 64801-003*	
		13.2K/14.6K	
	64006-001	<190 Ackermann, *Replaces 64442-002*	
	64006-002	>190 Ackermann, *Replaces 64442-003*	
33		**7/8" Castle Nut	2
		***Tie Rod End Service Kit, Axle Set, Includes LH and RH Tie Rod End Service Kits	
	60961-010	12K/12.5K, *Replaces 60961-081*	
	60961-011	13.2K/14.6K, *Replaces 60961-082*	
		***LH Tie Rod End Service Kit, Includes Key Nos. 34, 36-37	
	60961-025	12K/12.5K, *Replaces 60961-083*	
	60961-027	13.2K/14.6K, *Replaces 60961-085*	
		***RH Tie Rod End Service Kit, Includes Key Nos. 35-37	
	60961-026	12K/12.5K, *Replaces 60961-084*	
	60961-028	13.2K/14.6K, *Replaces 60961-086*	
34		***LH Tie Rod End	1
	64000-001	12K/12.5K, *Replaces 65033-001*	
	64002-001	13.2K/14.6K, *Replaces 65034-001*	
35		***RH Tie Rod End	1
	64000-002	12K/12.5K, *Replaces 65033-002*	
	64002-002	13.2K/14.6K, *Replaces 65034-002*	
36	22962-007	7/8" Flat Washer	2
37	17800-004	Tie Rod Nut Cotter Pin	2
38	60238-001	½"-13 UNC Square Head Bolt	2
39	60240-000	½"-13 UNC Hex Jam Nut	2
40	59952-017	Top Axle Wrap	2
41	64722-003	Bottom Axle Wrap	2
		U-bolt Clamp Group Service Kit, One Side, Includes Key Nos. 42-46	
	60961-185	12K/12.5K and 13.2K/14.6K	
		366 mm Ride Height, 4.25 Drop	
		338 mm Ride Height, 5.36 Drop	
	60961-186	12K/12.5K, 338 mm Ride Ht., 4.25 Drop	
	60961-187	13.2K/14.6K, 338 mm Ride Ht., 4.25 Drop	
	60961-015	Top/Bottom Axle Wrap Liner Service Kit, One Side, Includes Key Nos. 42-43	
42	60508-000	Top Axle Wrap Liner	2
43	59845-000S	Bottom Axle Wrap Liner	2

KEY NO.	PART NO.	DESCRIPTION	NO.REQ.
44		M20 x 2.5-6G U-bolt	4
		• Vehicles built with Pre '07 Engine, see page 13	
	65663-002	12K/12.5K and 13.2K/14.6K 366 mm Ride Ht., Bolt Length 275 mm	
	65663-003	12K/12.5K 338 mm Ride Ht., Bolt Length 225 mm	
	65663-004	13.2K/14.6K 338 mm Ride Ht., Bolt Length 255 mm	
45	58246-009	M20 Flat Washer	8
46	65072-001	M20 x 2.5-6H Locknut	8
47		LH Top Pad	1
	67266-001	266 Frame Rail, *Replaces 64517-001, 64172-001L, 64725-001L, 65493-001L*	
	67300-001	300 Frame Rail, *Replaces 64173-001L, 64173-001L, 64727-001L, 65605-001L*	
		• Vehicles built with Pre '07 Engine, see page 13	
48		RH Top Pad	1
	67266-002	266 Frame Rail, *Replaces 64517-002, 64172-002L, 64725-002L, 65493-002L*	
	67300-002	300 Frame Rail, *Replaces 64161-002, 64173-002L, 64727-002L, 65605-002L*	
		• Vehicles built with Pre '07 Engine, see page 13	
49	64080-000	Rubber Axle Stop	2
50		LH Dowel Pin	1
		• Vehicles equipped with dual HCVs, built after 03/05	
	57159-004	366 mm Ride Height, 66.8 mm	
		• Vehicles equipped with a single HCV built prior to 03/05	
	57159-007	338 mm Ride Height, 79.5 mm	
	57159-012	338 mm Ride Height, 85.9 mm	
	57159-009	366 mm Ride Height, 107.2 mm	
	57159-013	366 mm Ride Height, 115 mm	
51		RH Dowel Pin	1
		• Vehicles equipped with dual HCVs built after 03/05	
	57159-004	366 mm Ride Height, 66.8 mm	
		• Vehicles equipped with a single HCV built prior to 03/05	
	57159-004	338 mm Ride Height, 66.8 mm	
	57159-008	366 mm Ride Height, 94.8 mm	
52		LH Front Axle Spacer	1
		• Vehicles equipped with dual HCVs built after 03/05	
	64318-028	366 mm Ride Height, 28 mm	
		• Vehicles equipped with a single HCV built prior to 03/05	
	64318-012	338 mm Ride Height, 12 mm	
	64318-020	338 mm Ride Height, 20 mm	
	64318-040	366 mm Ride Height, 40 mm	
	64318-048	366 mm Ride Height, 48 mm	
53		RH Front Axle Spacer	1
		• Vehicles equipped with dual HCVs built after 03/05	
	64318-028	366 mm Ride Height, 28 mm	
54	64166-000	Air Spring Adapter for Top Pad 13.2K/14.6K Only	2

NOTE: * Not supplied by Hendrickson, used for reference only. Refer to OEM (vehicle manufacturer) for more information. Hendrickson is not responsible for components supplied by vehicle manufacturer. For assistance with maintenance and rebuild instructions on these components see vehicle manufacturer.

** Item included in assembly only, part not sold separately.

*** Hendrickson supplies different tie rod assemblies and each type may take a different replacement tie rod end kit to service. Prior to ordering find the part number on the tie rod tube, see Hendrickson Literature No. SEU-0223 or contact Hendrickson Sales Engineering for corresponding kit numbers.

HENDRICKSON AIRTEK RIDE HEIGHT GAUGES FOR MACK VEHICLES:
Lit No. 45745-170 (12K/12.5K Capacity) or Lit No. 45745-195 (13.2K/14.6K Capacity). Height Gauges can be obtained on-line at www.hendrickson-intl.com/literature/litform.asp

Top Pad with Hex Bolt

Mack vehicles built with Pre'07 Engine

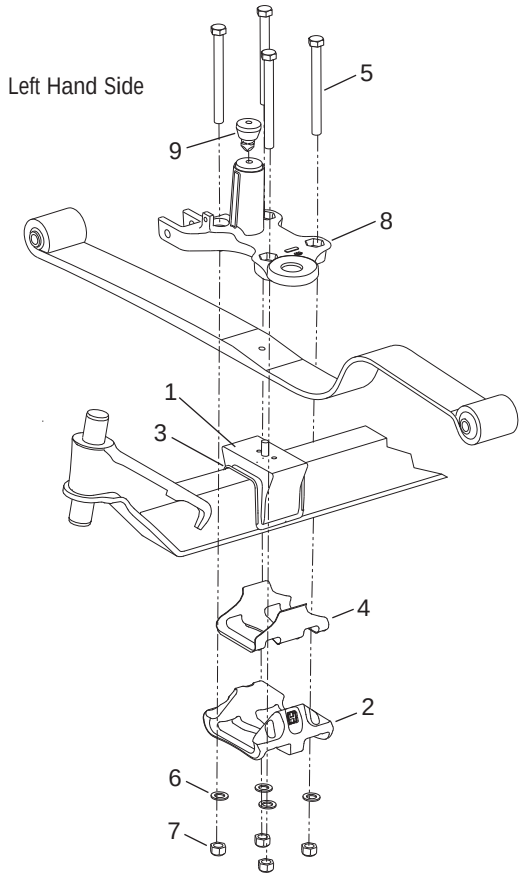

KEY NO.	PART NO.	DESCRIPTION	NO.REQ.
1	59952-017	Top Axle Wrap	2
2	64722-003	Bottom Axle Wrap	2
		Straight Bolt Clamp Group Service Kit, One Side, Includes Key Nos. 3-7	
		• Vehicles equipped with dual HCVs, built after 03/05	
		12K/12.5K and 13.2K/14.6K	
	60961-035	338 mm Ride Ht.	
	60961-036	366 mm Ride Ht.	
		• Vehicles equipped with a single HCV, built prior to 03/05	
	60961-035	12K/12.5K, 338 mm Ride Ht.	
	60961-036	12K/12.5K, 366 mm Ride Ht.	
	60961-037	13.2K/14.6K, 338 mm Ride Ht.	
	60961-038	13.2K/14.6K, 366 mm Ride Ht.	
3	60508-000	Top Axle Wrap Liner	2
4	59845-000S	Bottom Axle Wrap Liner	2
5		M20 x 2.5-6G Hex Bolt	8
		• Vehicles equipped with dual HCVs, built after 03/05	
		12K/12.5K and 13.2K/14.6K	
	58258-007	338 mm Ride Ht., Bolt Length 220 mm	
	58258-011	366 mm Ride Ht., Bolt Length 250 mm	
		• Vehicles equipped with a single HCV, built prior to 03/05	
		12K/12.5K	
	58258-009	338 mm Ride Ht., Bolt Length 230 mm	
	58258-010	366 mm Ride Ht., Bolt Length 260 mm	
		13.2K/14.6K	
	58258-007	338 mm Ride Ht., Bolt Length 220 mm	
	58258-011	366 mm Ride Ht., Bolt Length 250 mm	
6	58246-009	M20 Flat Washer	8
7	65072-001	M20 x 2.5-6H Locknut	8
8		Top Pad Assembly, (Pre '07 Engine Top Pads are obsolete. If top pad replacement is required, replace with current top pad and U-bolts, see Key Nos. 44,47,48)	
9	64080-000	Rubber Axle Stop	2

Dual Height Control Valves

Mack vehicles built between 03/05 and 12/07

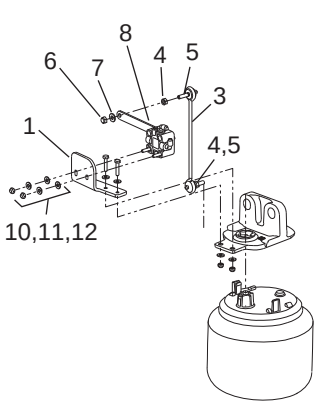

LEFT HAND
12K/12.5K Shown

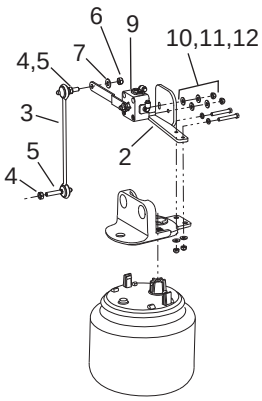

RIGHT HAND
12K/12.5K Shown

KEY NO.	PART NO.	DESCRIPTION	NO.REQ.
		HCV, Link Mount & Linkage Assembly, Includes Key Nos. 1-12	2
	65601-006	LH 12K/12.5K	
	65601-007	RH 12K/12.5K	
	65602-006	LH 13.2K/14.6K	
	65602-007	RH 13.2K/14.6K	
1		LH Height Control Valve Bracket	1
	64480-005	12K/12.5K	
	64481-005	13.2K/14.6K	
2		RH Height Control Valve Bracket	1
	64480-004	12K/12.5K	
Not Shown	64481-004	13.2K/14.6K	
		HCV & Linkage Assembly	2
	59427-025	LH, Includes Key Nos. 3-8, 10-12	1
	59427-026	RH, Includes Key Nos. 3-7, 9-12	1
3	59428-004	Height Control Valve Linkage	2
4	64298-000	M8 x 1.25-6H Hex Nut	4
5	59169-002	M8 Link Stud	4
6	64297-000	M8 x 1.25-6H Locknut	4
7	58246-012	M8 Flat Washer	4
8	59935-017	LH HCV	1
9	59935-016	RH HCV	1
10	58246-014	M6 Flat Washer	4
11	17497-001	¼" Lockwasher	4
12	66388-000	M6 x 1.0-6H Locknut	4

Single Height Control Valve

Mack vehicles built prior to 03/05

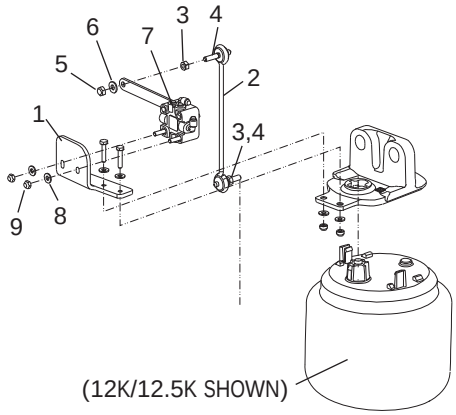

KEY NO.	PART NO.	DESCRIPTION	NO.REQ.
		Single HCV, Link Mount & Linkage Assembly, Includes Key Nos. 1-9	1
	64089-000	12K/12.5K	
	64094-000	13.2K/14.6K	
1		Single Height Control Valve Bracket	1
	64480-000	12K/12.5K	
	64481-000	13.2K/14.6K	
	59427-006	Single Height Control Valve & Linkage Assembly, Includes Key Nos. 2-9	1
2	59428-004	Height Control Valve Linkage	1
3	64298-000	M8 x 1.25-6H Hexnut	2
4	59169-002	M8 Link Stud	2
5	64297-000	M8 x 1.25-6H Locknut	2
6	58246-012	M8 Flat Washer	2
7	59935-003	Height Control Valve	1
8	22962-028	¼" Flat Washer	2
9	49983-000	¼" 20 UNC Locknut	2

Obtain a Hendrickson **Dual Height Control Valve Conversion Kit** to convert a single height control valve to dual height control valves configuration.

Dual Height Control Valve and Linkage Kit

60961-101	12K/12.5K Capacity
60961-102	13.2K/14.6K Capacity

Air Spring with Support Plate Service Kit No. 60961-182

Mack vehicles built between 03/05 and 06/07 equipped with dual height control valves

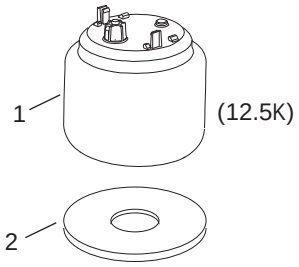

Vehicles built **between** 03/05 and 06/07, equipped with dual HCVs **must use** Air Spring with Support Plate Service Kit No. 60961-182

KEY NO.	PART NO.	DESCRIPTION	NO.REQ.
1	67304-002	Air Spring (12.5K)	1
2	67149-000	Support Plate	1

SECTION 6

Towing Procedures

ON HIGHWAY AND ON ROADWAY

Hendrickson recommends that a vehicle equipped with a STEERTEK axle be towed by the following methods (listed in order of preference) for ON HIGHWAY or ON ROADWAY applications.

1. Wheel lift method, the ideal towing procedure
2. Towing the vehicle from the rear method
3. Conventional axle fork method
4. Spring eye and hanger lift method (may require the removal of fairings)

Please read, understand and comply with any additional towing instructions and safety precautions that may be provided by the vehicle manufacturer.

Hendrickson will not be responsible for any damage to the axle, suspension or other vehicle components resulting from any towing method or fixture not authorized by Hendrickson.

Please contact Hendrickson Tech Services at 866-755-5968 or send email to: techservices@hendrickson-intl.com with any questions regarding proper towing procedures for vehicles equipped with a STEERTEK axle.

WHEEL LIFT METHOD — IDEAL

This method provides the greatest ease for towing the vehicle. Lifting at the tires helps reduce the risk of possible damage to the axle, suspension, and engine components during towing operations, see Figure 6-1.

FIGURE 6-1 WHEEL LIFT METHOD

TOWING VEHICLE FROM THE REAR METHOD

This method is preferred when the proper equipment is not available to perform the wheel lift method and is necessary for wreckers not equipped with an under lift system.

AXLE FORK LIFT METHOD

This is an alternative method for towing the vehicle, but requires standard 5" forks, see Figures 6-2 and 6-3, and designated lift points inside the axle clamp groups. The following procedure must be used:

- Place a spacer on the boom, to provide adequate clearance between the oil pan and the boom if necessary. Lift the vehicle in order to place spacer under tires. This will provide sufficient room under the axle to locate forks in the proper position.
- Install the fork in the boom properly.
- Position the tow forks directly under the axle, inside the STEERTEK axle clamp groups as shown in Figures 6-2 and 6-3.

FIGURES 6-2 AND 6-3

Proper tow fork location is inside the STEERTEK axle clamp groups

FIGURE 6-4 - WITHOUT GAP

FIGURE 6-5 - WITH GAP

- Prior to lifting the vehicle, ensure that the bottom axle plate is flat in the tow fork to minimize any gap between the bottom axle plate and the tow fork, see Figures 6-4 and 6-5. It may be necessary to deflate the air in the steer axle suspension, and/or release the tractor brakes. Deflate the steer axle air springs by disconnecting the height control valve linkage and lowering the height control valve linkage arm. This will exhaust the air pressure in the steer axle air springs.

NOTE

When lifting a vehicle with an under lift boom, care must be taken not to damage the engine's oil pan. Vehicles equipped with a front fairing may require removal of the front fairing prior to towing to prevent component damage.

- Lift vehicle and secure the vehicle to the boom.
- Install safety straps, it is preferred to use nylon safety straps. Chains have a tendency to bind and may cause damage to the axle.

SPRING EYE AND HANGER LIFT METHOD

This method is permitted for under lift equipped units, caution must be taken as not to damage leaf spring, see Figure 6-7 for proper installation.

- Inspect ends of spring cradles for burrs or sharp edges that could damage spring.
- When securing the vehicle to the boom, it is preferred to use nylon safety straps. Chains have a tendency to bind and may cause damage to the axle.

NOTE

When lifting a vehicle with the under lift boom, see Figures 6-6 and 6-7, care must be taken as not to damage the engine oil pan. It may be necessary to remove the front fairing. If necessary place a block of wood between the top of the boom and the bottom of the axle.

FIGURE 6-6

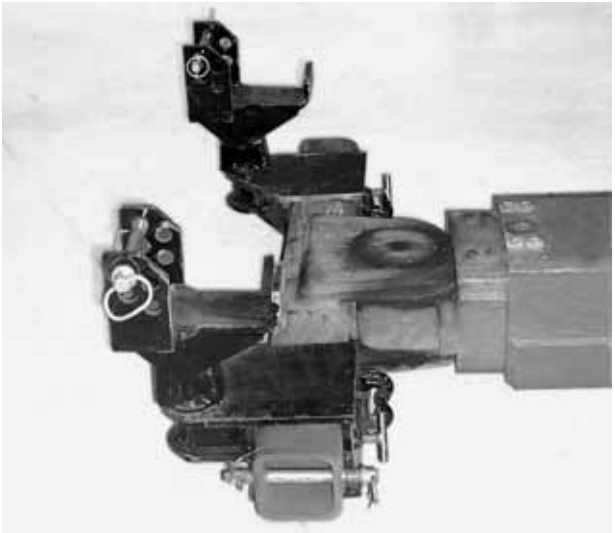

FIGURE 6-7

OFF ROADWAY TOWING

WARNING

WHEN A VEHICLE IS DISABLED AND EQUIPPED WITH A STEERTEK AXLE, CARE MUST BE TAKEN TO ENSURE THERE IS NO DAMAGE TO THE SUSPENSION OR AXLE WHEN TOWING THE VEHICLE. THE USE OF A TOW STRAP IS NECESSARY TO TOW A DISABLED VEHICLE INTO A REPAIR FACILITY PARKING LOT INTO THE SHOP BAY. THE TOW STRAPS SHOULD BE CONNECTED TO THE TOW HOOKS PROVIDED BY THE VEHICLE MANUFACTURER AT THE FRONT OF THE BUMPER. IF THE USE OF TOW HOOKS IS NOT AN OPTION, THEN A TOW STRAP MAY BE WRAPPED AROUND THE FRONT STEERTEK AXLE, SEE FIGURE 6-8, IN A MANNER THAT IS ACCEPTABLE FOR TOWING THE VEHICLE FROM A REPAIR FACILITY PARKING LOT INTO THE SHOP BAY. DO NOT USE A TOW CHAIN AROUND THE FRONT STEERTEK AXLE OR WITH A SINGLE POINT LOCATION TO TOW THE VEHICLE. DOING SO WILL DAMAGE THE AXLE AND VOID WARRANTY, SEE FIGURE 6-9.

THE FOLLOWING METHODS ARE NOT RECOMMENDED FOR ON HIGHWAY OR ON ROADWAY TOWING

FIGURE 6-8

NYLON STRAPS ARE ACCEPTABLE FOR OFF ROADWAY TOWING

FIGURE 6-9

CHAINS ARE NOT ACCEPTABLE FOR OFF ROADWAY TOWING

SECTION 7

Preventive Maintenance

Following appropriate inspection procedure is important to help ensure the proper maintenance and operation of the AIRTEK® suspension system and component parts function to their highest efficiency.

HENDRICKSON RECOMMENDED PREVENTIVE MAINTENANCE INTERVALS

- The first 1,000 miles
- On-highway – every 50,000 miles (80,450 km) or 6 months, whichever comes first

COMPONENT INSPECTION

- Air Spring — Look for chaffing or any signs of spring or component damage.
- Clamp group — Check torque on clamp group mounting hardware. Refer to the Torque Specifications Section of this publication.
- Fasteners — Look for any loose or damaged fasteners on the entire suspension. Make sure all fasteners are tightened to the specified torque. See Torque Specification Section of this publication for recommended torque requirements. Use a calibrated torque wrench to check torque in a tightening direction. As soon as the fastener starts to move, record the torque. Correct the torque if necessary. Replace any worn or damaged fasteners.
- Front hangers and shackle brackets — Check for cracks or loose mounting hardware. Replace if necessary, see Component Replacement Section of this publication for replacement procedure.
- Steering operation — All steering components on the axle assembly must move freely through the full range of motion from axle stop to axle stop.
- Rubber axle stops — The rubber axle stop is exposed to contact forces in extreme jounce conditions. It will be necessary to visually inspect the rubber axle stop for wear at the specified inspection interval. The rubber axle stop must be replaced when the contact rubber is worn down to a 1⁄16" above the bump stop pedestal. See Component Replacement Section of this publication for replacement.
- Shock absorber — Look for any signs of dents or leakage, misting is not considered a leak. See Shock Absorber Inspection in this section.
- Steel leaf springs — Look for cracks. Replace if cracked or broken. Check the front and rear bushings for any wear or deterioration. See Component Replacement Section of this publication for replacement procedure.
- Steering pivot points — Check for looseness at all pivot points on the axle assembly. Inspect and lubricate all pivot points, maximum service interval is 25,000 miles. Refer to the Lubrication matrix in this section.
- STEERTEK axle — The axle should be free of any nicks or gouges. Inspect for any cracks or dents on axle.
- Thrust washers and rear shackle bracket — Look for any signs of excessive wear to the thrust washers, shackles and shackle bracket. See Thrust Washer Inspection detailed in this section.
- Tire wear — Inspect tires for wear patterns that may indicate suspension damage or misalignment. See Tire Inspection in this section.
- Top and bottom axle wrap liners — Look for any cracking or broken pieces on liner in load bearing areas. See Axle Wrap Liner Inspection in this section.
- Top pad and bump stop — Look for cracks and or missing rubber bump stops. Replace if necessary, see Component Replacement Section of this publication.

- **Wear and damage** — Inspect all parts of suspension for wear and damage. Look for bent or cracked parts. Replace all worn or damaged parts.

See vehicle manufacturer's applicable publications for other preventative maintenance requirements.

CLAMP GROUP RE-TORQUE INTERVAL

WARNING

LOOSE OR OVER TORQUED FASTENERS CAN CAUSE COMPONENT DAMAGE, LOSS OF VEHICLE CONTROL, PROPERTY DAMAGE, OR SEVERE PERSONAL INJURY. MAINTAIN CORRECT TORQUE VALUES AT ALL TIMES. CHECK TORQUE VALUES ON A REGULAR BASIS AS SPECIFIED.

1. Clamp group locknuts must be torqued to specification at preparation for delivery.
2. Clamp group locknuts must be re-torqued at 1,000 miles.
3. Thereafter follow the 6 month / 50,000 mile inspection and annual re-torque interval.
4. Ensure that the clamp group is properly aligned and the U-bolts/Hex Bolts are seated in the top pad, and the bottom axle wrap is centered on the top axle wrap, see Figure 7-1.

NOTE — The clamp group U-bolt locknuts and Hex bolt locknuts have the same torque value.

FIGURE 7-1

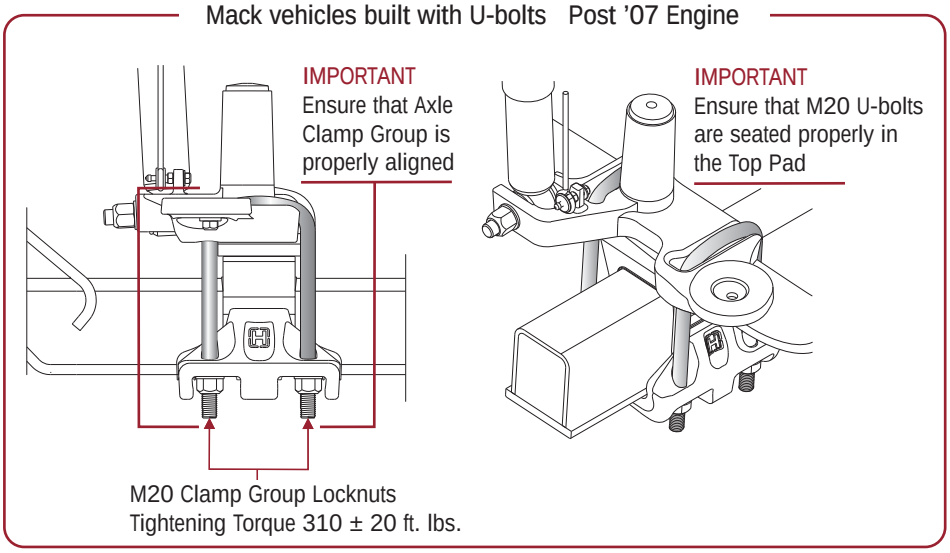

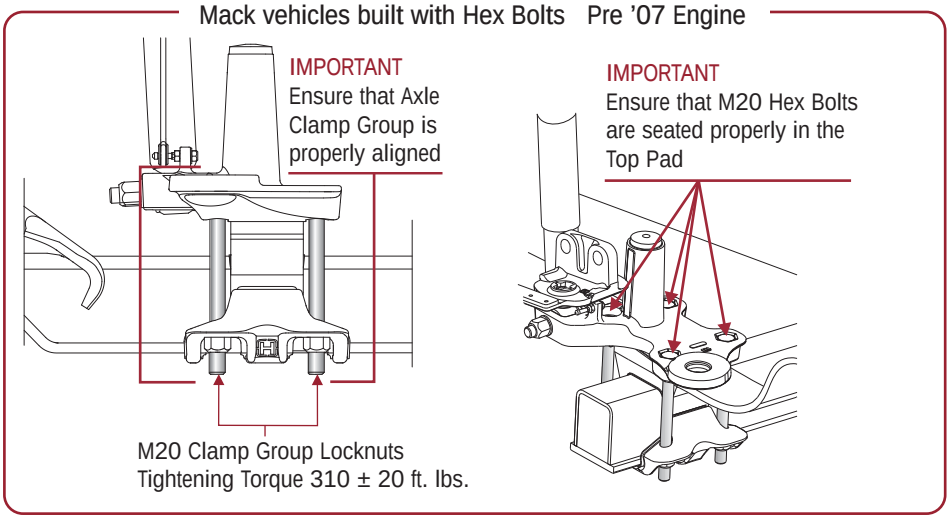

FIGURE 7-2

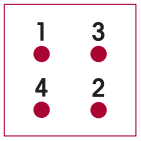

5. Tighten the clamp group locknuts evenly in 50 foot pounds increments to 310 ± 20 foot pounds (420 ± 27 Nm) torque in the proper pattern to achieve uniform bolt tension, see Figure 7-2.

LUBRICATION INTERVALS

For vehicles equipped with the STEERTEK axle, regular lubrication intervals should be followed to help prevent premature wear to the kingpin bushings and tie rod ends, see lubrication chart below.

NOTE

The recommended service lubrication interval is a guideline, the vehicle may require increased lubrication interval depending on severity of operation.

STEERTEK GREASING AND LUBRICATION SPECIFICATIONS				
Component	Greasing Interval	Grease	NLGI Grade	Outside Temperature
Kingpin Bushings	Maximum of 25,000 miles (40,230 kilometers), or for 90 days, whichever comes first.	Multipurpose Grease	2	Refer to the lubricant manufacturer's specifications for the temperature service limits applicable to your area.
Tie Rod Ends				
Drag Link	See Vehicle Manufacturer			
NOTE: Lubrication greases acceptable for use on the STEERTEK axle will carry a designation of NLGI #2 EP and rated GC-LB or equivalent.				

KINGPIN LUBRICATION

On the Hendrickson STEERTEK front axle the kingpin grease fittings are located on the top and bottom of the kingpin steering knuckle.

FIGURE 7-3

1. Place vehicle on the ground.
2. Prior to greasing the kingpins on the vehicle, the suspension must be in a loaded condition.
3. Clean off all the grease fittings and grease gun tip with a clean shop towel prior to lubrication.
4. Lubricate the kingpins through the grease fittings on the top and bottom of the steering knuckle, see Lubrication chart above.
5. Force the required lubricant into the upper and lower kingpin grease fittings, until new lubricant flows from upper axle beam and knuckle locations, see grease purging from composite bearing in Figure 7-3.

NOTE

Greasing at the lower zerk should purge grease from the thrust bearing shell. The left side of the axle has a composite style thrust bearing, see Figure 7-4 and the right side of the axle has a steel roller thrust bearing, see Figure 7-5. Both purge in the same area.

FIGURE 7-4

FIGURE 7-5

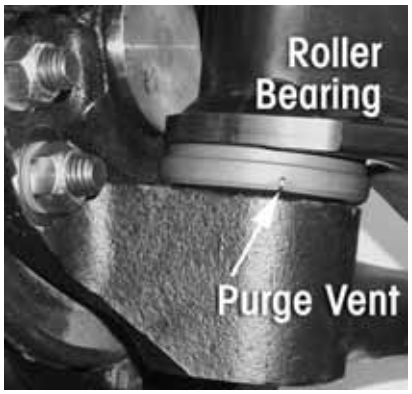

TIE ROD END LUBRICATION

LUBRICATION PROCEDURE

1. Turn the vehicle wheels straight ahead.
2. Wipe the zerk fitting and grease gun tip with clean shop towels.
3. Wipe the seal/boot clean with shop towels.
4. Attach a grease gun to the zerk fitting. Either a hand or pneumatic grease gun is acceptable. If air operated grease gun is used, system air pressure should not exceed 150 psi (1035 kPa).

CAUTION

EXCEEDING THE MAXIMUM AIR PRESSURE TO THE ZERK FITTING CAN CAUSE DAMAGE TO THE DUST BOOT AND COMPONENT FAILURE.

5. Dirt, water, and discolored old grease should flow from the relief vents or purge holes near the boot crimp or bellows area, see Figure 7-6. Continue to purge grease until fresh grease flows from the purge area.

FIGURE 7-6

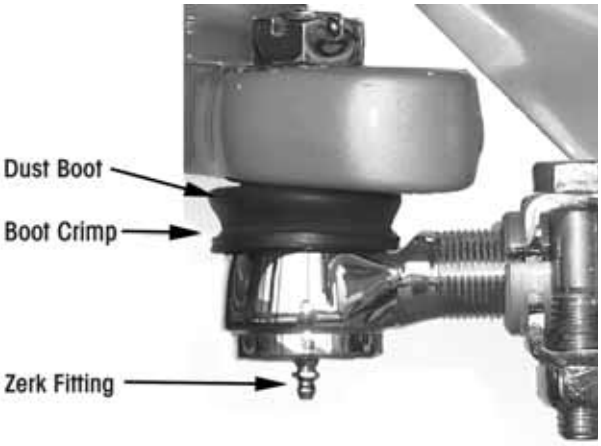

6. If the tie rod end is designed for lube service and it will not accept grease proceed as follows:
   a. Remove the zerk fitting
   b. Inspect the threaded zerk fitting hole in the tie rod end and remove any obstructions
   c. Install a new zerk fitting
   d. Continue the lubrication procedure
   e. If the tie rod end will not accept grease following this procedure it will be necessary to replace the tie rod end. Refer to Tie Rod End replacement in Component Replacement Section of this publication.
7. Apply grease until all the old grease is purged from the boot and fresh grease is coming out.

TIE ROD END INSPECTION

INSPECTION PROCEDURE

Before beginning this inspection procedure, the entire system must be unloaded (i.e., the front end of the vehicle must be raised and supported with safety stands).

CAUTION

GREASE THE TIE ROD ASSEMBLY BEFORE PERFORMING THE INSPECTION. DOING SO CAN INHIBIT EFFORTS TO DETERMINE ACTUAL WEAR.

CAUTION

REPLACE THE ENTIRE TIE ROD END IF THE BOOT IS TORN OR MISSING, FAILURE TO DO SO CAN CAUSE PREMATURE WEAR OF THE TIE ROD END.

1. Block rear wheels of vehicle. Using the bottom of the axle beam or the frame rails, raise the front end off the ground and support with stands.
2. With the engine off, turn the wheels from full left to full right and then return to the straight-ahead position.
3. Check that the boots are in place and completely installed over the tie rod ends.
4. Check for cracking or tears in the boots. Also check the boot seals for damage. Replace the entire tie rod end if the boot is damaged.

WARNING

THE CORRECT COTTER PIN MUST BE INSTALLED THROUGH THE TIE ROD END WITH THE CASTLE NUT TIGHTENED TO THE PROPER TORQUE SPECIFICATION IN ORDER TO SECURELY ATTACH THE TIE ROD. LOSS OF THE COTTER PIN CAN CAUSE THE TIE ROD END NUT TO BECOME LOOSE AND ADVERSELY AFFECT VEHICLE STEERING AND POSSIBLY RESULT IN TOTAL LOSS OF STEERING CONTROL.

5. Check that the tie rod end nut is installed and secured with a cotter pin. If the cotter pin is missing, check the nut torque specification and then install a new cotter pin. Always tighten the castle nut to specified torque when setting the cotter pin. DO NOT back off the nut to insert cotter pin.

WARNING

IT IS CRITICAL TO CHECK THE ⅝" TIE ROD CLAMP BOLT HEAD LOCATION TO VERIFY THE CLAMP FASTENERS HAVE SUFFICIENT CLEARANCE AWAY FROM THE LOWER SHOCK MOUNT AT FULL WHEEL CUT. THE FASTENERS MUST NOT CONTACT THE LOWER SHOCK MOUNT. FAILURE TO DO SO CAN CAUSE ONE OR MORE COMPONENTS TO FAIL CAUSING LOSS OF VEHICLE CONTROL AND POSSIBLE PERSONAL INJURY OR PROPERTY DAMAGE.

6. Verify the ⅝" tie rod clamp bolt head does not contact the lower shock mount at full wheel cut, see Figure 7-7.

FIGURE 7-7

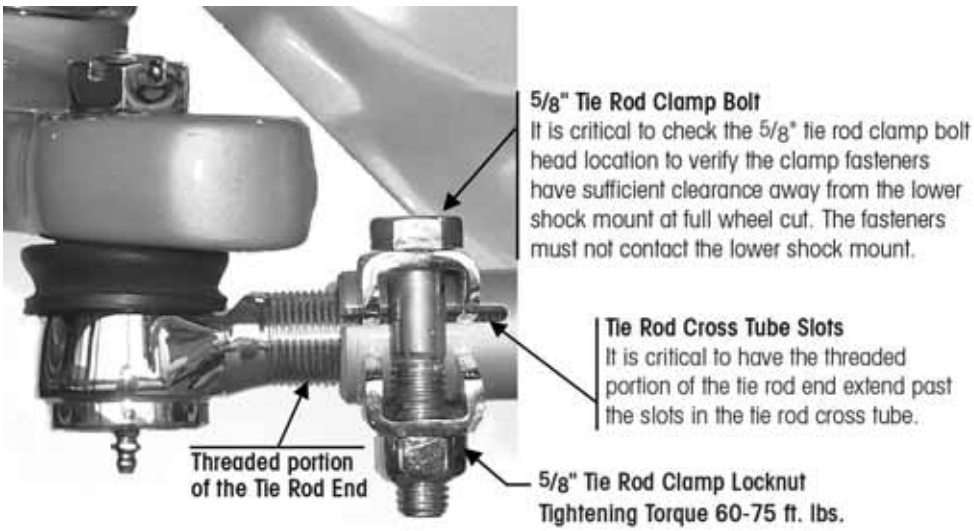

WARNING

THE THREADED PORTION OF THE TIE ROD END MUST EXTEND PAST THE SLOTS INTO THE TIE ROD CROSS TUBE, SEE FIGURE 7-7. FAILURE TO DO SO CAN CAUSE COMPONENT DAMAGE, LOSS OF VEHICLE CONTROL AND POSSIBLE PERSONAL INJURY OR PROPERTY DAMAGE.

7. Check that the tie rod end is threaded correctly into the cross tube and is engaged deeper than the end of the cross tube slot. The tie rod end must be visible the entire length of the cross tube slot, see Figure 7-7.
8. Check that zerk fittings are installed. Replace a damaged zerk fitting with a new one.

CAUTION

DO NOT USE THE FOLLOWING ITEMS OR METHODS TO CHECK FOR MOVEMENT OF THE TIE ROD ASSEMBLY, WHICH CAN CAUSE DAMAGE TO COMPONENTS:

- A CROW BAR, PICKLE FORK OR 2 x 4 ARE USED.
- ANYTHING OTHER THAN HANDS USED TO GRASP AND ROTATE THE CROSS TUBE ASSEMBLY (CAN RESULT IN DAMAGE TO THE CROSS TUBE).
- EXCESSIVE PRESSURE OR FORCE IS APPLIED TO THE TIE ROD ENDS OR THE JOINTS OF THE ASSEMBLY.

9. By hand or using a pipe wrench, with jaw protectors to avoid gouging the cross tube, rotate the cross tube toward the front of the vehicle and then toward the rear. After rotating, center the cross tube. If the cross tube will not rotate in either direction, replace both tie rod ends, see Figure 7-8.

FIGURE 7-8

FIGURE 7-9

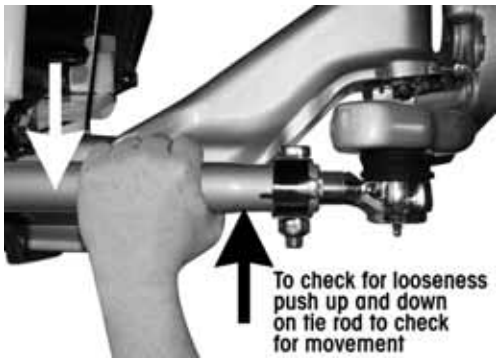

10. Position yourself directly below the tie rod end. Using both hands, grab the assembly end as close to the tie rod end as possible (no more than 6" or 152.4 mm). Apply hand pressure with reasonable human effort vertically up and down in a push-pull motion several times (using approx. 50-100 lbs. of force). Check for any movement or looseness at both tie rod end locations, see Figure 7-9.
11. If there is any movement in the tie rod assembly, install a magnetic based dial indicator on the Ackermann arm, see Figure 7-10.
12. Set the dial indicator to zero.
13. Apply hand pressure with reasonable human effort vertically up and down in a push-pull motion several times (using approx. 50-100 lbs. of force). Observe the reading on the dial indicator.

FIGURE 7-10

14. If the reading is more than 0.060", replace both tie rod ends at the next service interval.
15. If a tie rod end exhibits ≥ 0.125" of movement by hand, the vehicle should be removed immediately from use and the tie rod end be replaced.

NOTE

According to the Commercial Vehicle Safety Alliance (CVSA), the "out of service" criteria for any commercial vehicle is: Any motion other than rotational between any linkage member and its attachment point of more than ⅛" (3 mm) measured with hand pressure only. (393.209(d)), (published in the North American Standard Out-of-Service Criteria Handbook, April 1, 2006.)

TIRE INSPECTION

The leading potential causes of tire wear according to TMC (The Technology & Maintenance Council) are the following in order of importance:

1. Tire Pressure
2. Toe Setting
3. Thrust Angle
4. Camber

- The following tire Inspection guidelines are based upon TMC recommended practices. Any issues regarding irregular tire wear where Hendrickson is asked for assistance, will require tire and alignment maintenance records as described in the TMC literature number RP 642 or TMC "Guidelines for Total Vehicle Alignment" publication.
- Tire wear is normally the best indicator of vehicle alignment condition. If tires are wearing too rapidly or irregularly, alignment corrections may be needed. The tire wear patterns described below can help isolate specific alignment problems.
- The most common conditions of concern are:
  - Overall Fast Wear (Miles per 32nd)
  - Feather Wear
  - Cupping
  - Diagonal Wear
  - Rapid Shoulder Wear (One shoulder only)
  - One-Sided Wear

FIGURE 7-11

OVERALL FAST WEAR (Miles per 32nd)

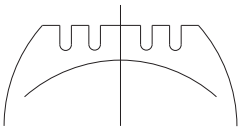

Overall Fast Wear — Fast wear can be described as exhibiting a good, but accelerated wear pattern. It is typically caused by operating conditions, such as mountainous terrain, frequency and severity of turning, abrasive road surfaces in combination with vehicle configurations and their attributes-such as power steering, heavy axle loads, high wheel cuts, setback axles, short wheel base tractors, long wheel base straight trucks. To correct this problem, consult with vehicle and tire manufacturers when specifying equipment or replacing tires. For more information, see TMC RP 219A publication, page 11. For information on how to accurately measure and record tire rates, see TMC RP 230 publication.

FIGURE 7-12

FEATHER WEAR

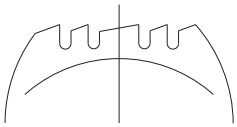

Feather Wear — Tread ribs or blocks worn so that one side is higher than the other resulting in step-offs across the tread face. Generally, ribs or blocks exhibit this wear. To spot this problem, do the following:

With one hand flat on the tread of the tire and a firm down pressure, slide your hand across the tread of the tire. In one direction, the tire will feel smooth and in the opposite direction there will be a sharp edge to the tread. Typical causes of feather wear include: excessive side force scrubbing, resulting from conditions of misalignment such as excessive toe, drive axle misalignment, worn, missing or damaged suspension components, bent tie rods or other chassis misalignment.

To correct this problem, tires can be rotated to another axle for maximum utilization of remaining tread. Additionally, diagnose the vehicle itself and correct misalignment condition as required. If steer tire feathers are in opposite directions, an improper toe condition is most likely the cause. For more information, see TMC RP 219A publication, page 5.

If feather wear on both steer tires is in the same direction, drive axle or other chassis misalignment is indicated. If one steer tire shows feather wear and the other steer tire has normal wear, a combination of toe and drive axle or chassis misalignment is indicated.

FIGURE 7-13

CUPPING

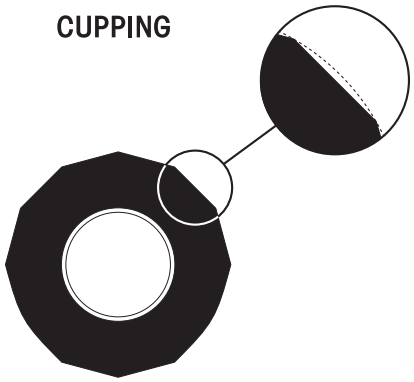

Cupping — Localized, dished out areas of fast wear creating a scalloped appearance around the tire. Cupping, which appears around the tire on the shoulder ribs, may also progress to adjoining ribs. See TMC RP 219A publication, page 7.

Cupping is usually a result of moderate-to-severe imbalance, improper rim/wheel mounting, excessive wheel endplay or other assembly non-uniformity. It can also be due to lack of shock absorber control on some suspension types.

To solve cupping problems:

- *Tires* – Correct mismount or balance problem. If ride complaints arise, steer tires may be rotated to drive or trailer axle.
- *Vehicle* – Diagnose component imbalance condition, i.e., wheel, rim, hub, brake, drum. Correct as necessary.

FIGURE 7-14

DIAGONAL WEAR

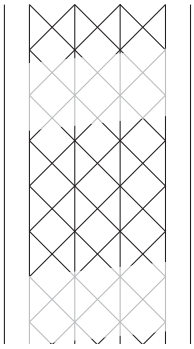

Diagonal Wear — Can be described as localized flat spots worn diagonally across the tread at approximately 25-35° angles, often repeating around the tread circumference. For more information, see TMC RP 219A publication, page 20.

Diagonal wear is usually caused by bad wheel bearings, toe-out, mismounting of tire and wheel assembly to axle, and mismatched duals for size and/or inflation pressures. It may start as brake skid. Diagonal wear is aggravated by high speed empty or light load hauls.

To correct diagonal wear, reverse direction of rotation of the tire. If wear is excessive, true or retread. If the source of trouble is the vehicle, diagnose cause and correct as needed.

FIGURE 7-15

RAPID SHOULDER WEAR (One Shoulder Only)

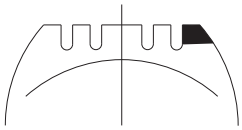

Rapid Shoulder Wear (One Shoulder Only) — Is defined as a tire worn on the edge of one shoulder, sometimes extending to inner ribs. It can progress to diagonal wipeout. For more information, see TMC RP 219A publication, page 22.

This wear condition is usually caused by excessive toe or excessive camber. These conditions can be created by a misaligned or bent axle and can also be caused by loose or worn wheel bearings.

To correct this type of rapid shoulder wear:

- *Tires* – Change direction of rotation of tire. If shoulder wear is severe, remove and retread.
- *Vehicle* – Diagnose misalignment and/or mechanical condition and correct.

FIGURE 7-16

ONE-SIDED WEAR

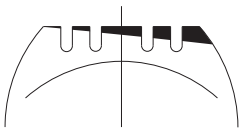

One-sided wear — Is excessive wear on one side of tire extending from the shoulder towards the center of the tread. For more information, see TMC RP 219A, page 26.

One-sided wear is usually caused by improper alignment, worn kingpins, loose wheel bearings, excessive camber, excessive axle loads, non-parallel axles, or non-uniform tire and wheel assembly caused by improper bead seating or bent wheel.

To correct one-sided wear:

- *Tires* – Depending on severity, rotate tires to another axle position or, if worn to minimum tread depths, submit for possible retreading.
- *Vehicle* – Diagnose mechanical problem and correct.

SHOCK ABSORBER INSPECTION

Hendrickson uses a long service life, premium shock absorber on all AIRTEK suspensions. When the shock absorber replacement is necessary, Hendrickson recommends that the shock absorbers be replaced with identical Hendrickson Genuine parts for servicing. Failure to do so will affect the suspension performance, durability, and will void the warranty.

Inspection of the shock absorber can be performed by doing a heat test, and a visual inspection. For instructions on shock absorber replacement see Component Replacement Section of this publication. It is not necessary to replace shock absorbers in pairs if one shock absorber requires replacement.

HEAT TEST

1. Drive the vehicle at moderate speeds on rough road for minimum of fifteen minutes.

WARNING

DO NOT GRAB THE SHOCK AS IT COULD POSSIBLY CAUSE PERSONAL INJURY.

2. Lightly touch the shock body carefully below the dust cover.
3. Touch the frame to get an ambient reference. A warm shock absorber is acceptable, a cold shock absorber should be replaced.
4. To inspect for an internal failure, remove and shake the suspected shock. Listen for the sound of metal parts rattling inside. Rattling of metal parts can indicate that the shock has an internal failure.

FIGURE 7-17

VISUAL INSPECTION

Look for these potential problems when doing a visual inspection. Inspect the shock absorbers fully extended. Replace as necessary.

FIGURE 7-18

LEAKING VS. MISTING SHOCK VISUAL INSPECTION

The inspection must not be conducted after driving in wet weather or a vehicle wash. Shocks needs to be free from water. Many shocks are often mis-diagnosed as failures. Misting is the process whereby very small amounts of shock fluid evaporate at a high operating temperature through the upper seal of the shock. When the “mist” reaches the cooler outside air, it condenses and forms a film on the outside of the shock body. Misting is perfectly normal and necessary function of the shock. The fluid which evaporates through the seal area helps to lubricate and prolong the life of the seal.

FIGURE 7-19

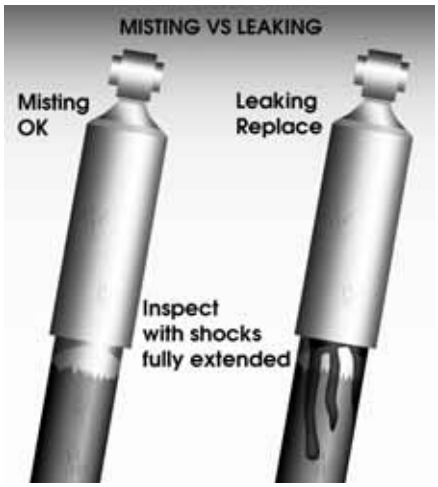

A shock that is truly leaking and needs to be replaced will show signs of fluid leaking in streams from the upper seal. These streams can easily be seen when the shock is fully extended, underneath the main body (dust cover) of the shock. Look for these potential problems when doing a visual inspection. Inspect the shock absorbers fully extended. Replaced as necessary.

NOTE

The AIRTEK suspension is equipped with a premium seal on the shock, however this seal will allow for misting to appear on the shock body (misting is not a leak and is considered acceptable).

If the shock is damaged install new shock absorber and replace as detailed in the Component Replacement Section of this publication.

THRUST WASHER INSPECTION

NOTE

If one thrust washer is worn out, Hendrickson recommends both thrust washers on that side of the suspension be replaced. Inspect the thrust washers on the other side of the vehicle and replace if necessary. See Thrust Washer replacement procedure in Component Replacement Section of this publication.

In normal use these components will function satisfactorily, even though the components may show some wear.

An indication that the thrust washers are worn, or need replacement is when the suspension exhibits one or more of the following conditions:

- Excessive lateral movement of the leaf spring.
- The rear leaf spring eye is in contact with the shackle bracket.
- Thrust washer thickness is less than ⅛" (0.125") or 3.17 mm. Thrust washers can be measured with a micrometer or a ruler.

KINGPIN BUSHING INSPECTION

INSPECTION PROCEDURE

1. Chock the wheels to help prevent the vehicle from moving. Set the parking brake.
2. Use a jack to raise the vehicle until the wheels are off the ground. Support the vehicle with safety stands.

FIGURE 7-20

FIGURE 7-21

3. CHECKING THE UPPER KINGPIN BUSHING. Install the base of a dial indicator onto the axle beam, see Figure 7-20.
4. Set the dial indicator to “0” zero.
5. Move the top of the tire in and out by applying reasonable constant pressure and then release, see Figure 7-22.

FIGURE 7-22

6. Check the reading on the dial indicator. If the dial indicator moves more than 0.015", the upper bushing is worn or damaged. Replace both bushings. Refer to the Kingpin Bushing replacement procedure in the Component Replacement Section of this publication.
7. CHECKING THE LOWER KINGPIN BUSHING. Install a dial indicator so that the base is on the axle and the indicator tip is against the inside of the bottom of the knuckle, see Figure 7-21.
8. Set the dial indicator to “0” zero.
9. Move the bottom of the tire in and out. If the dial indicator moves more than 0.015", the lower bushing is worn or damaged. Replace both kingpin bushings. Refer to the Component Replacement Section of this publication.

NOTE

If one bushing is worn or damaged, it is mandatory to replace both the top and bottom bushings on that knuckle assembly.

STEERING KNUCKLE INSPECTION

CHECKING VERTICAL END PLAY (UP AND DOWN MOVEMENT)

The operating spec for vertical end play on the steering knuckle is 0.008" to 0.030".

1. Chock the rear tires to help prevent the vehicle from moving.
2. Set the parking brakes.
3. Use a jack to raise the vehicle until both tires are 1.0" off the ground.

FIGURE 7-23

4. Place a dial indicator, see Figure 7-23, on each side of the axle as follows:
   a. Index the wheels slightly (left or right).
   b. Place the magnetic dial indicator base on the axle.
   c. Place the tip of the dial indicator on the top of the upper steering knuckle.
5. Set the dial indicator to “0” (zero).
6. Lower the jack.
7. If vertical end play is greater than 0.030" install shims (Hendrickson Part No. 60259-002) between the top of the axle and the bottom of the upper steering knuckle to obtain the proper clearance specification. See Steering Knuckle Assembly in the Component Replacement Section of this publication for proper shim installation.
8. If vertical end play is below 0.008", adjust the upper steering knuckle to obtain the proper clearance specification. See Steering Knuckle Assembly in the Component Replacement Section of this publication for proper shim removal.

AXLE WRAP LINER INSPECTION

INSPECTION PROCEDURE

- Axle wrap liners are installed on the STEERTEK axle to help prevent any type of abrasion on the axle at the clamp group area. Any time an axle wrap is removed it is mandatory that the axle wrap liner be replaced.
- Liner Crack Criteria:

  It is possible for the axle wrap liner to crack during service. If the liner is cracked and all the pieces are intact it is not necessary to replace the liner. If the liner is broken out and there are pieces missing the liner must be replaced immediately, see Figure 7-24. See Axle Wrap replacement in Component Replacement Section of this publication.

FIGURE 7-24

SECTION 8

Alignment & Adjustments

ALIGNMENT DEFINITIONS

FIGURE 8-1

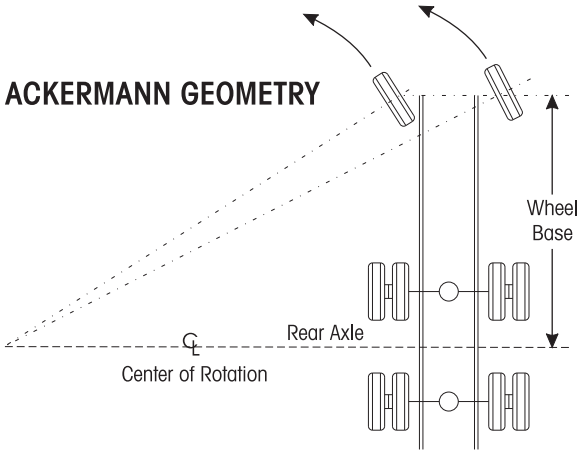

Ackermann Steering Geometry — The geometry of the four bar linkage consisting of the front axle, two knuckle assemblies, and tie rod assembly is designed to provide free rolling of front tire in a turn. Ackermann geometry is dependent upon the steering axle track-width and wheelbase of the vehicle. Improper geometry results in wheel scrub in turns which generally appears as toe wear on the tire, usually more wear on one side of the vehicle than the other due to the operational route of the vehicle.

Bump Steer (Feedback) — The feedback felt through the steering linkage to the steering wheel when a steer axle tire hits a bump in the road. This occurs because the axle-end of the drag link and the axle attachment point of the spring do not travel in parallel circular arcs as the suspension moves up and down. This condition can also be caused by trapped air in the power steering system.

FIGURE 8-2

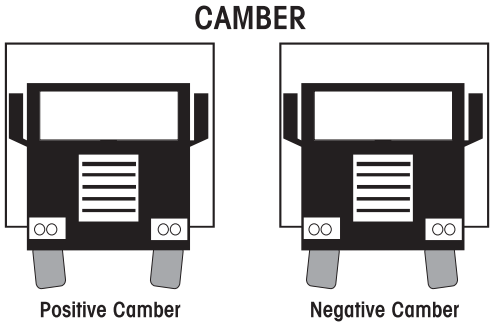

Camber — The angle formed by the inward or outward tilt of the wheel reference to a vertical line. Camber is positive when the wheel is tilted outward at the top and is negative when the wheel is tilted inward at the top.

Excessive positive camber may cause smooth wear on the outer half of the tire tread. Excessive negative camber may cause wear on the inner half of the tread. Static-unloaded camber angles are built into the axle to put the loaded tire perpendicular to the road.

FIGURE 8-3

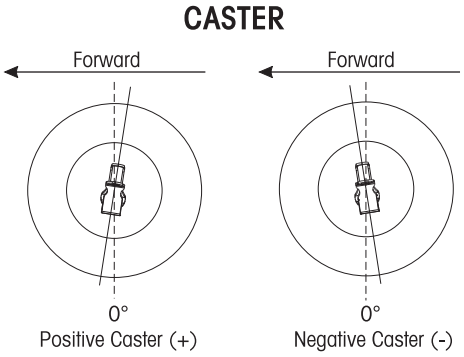

Caster — The forward or rearward tilt of the steering axle kingpin in reference to a vertical line. The angle is measured in degrees. Caster is positive when the top of the steering axis is titled rearward and is negative when the tilt is forward. Proper caster is important for directional stability and returnability. Too much positive caster can cause shimmy, excessive steering effort and is normally a vehicle performance and handling consideration. Uneven positive caster may create a steering pull toward the side with the lower caster. This attribute may be used to compensate for crowned roads.

FIGURE 8-4

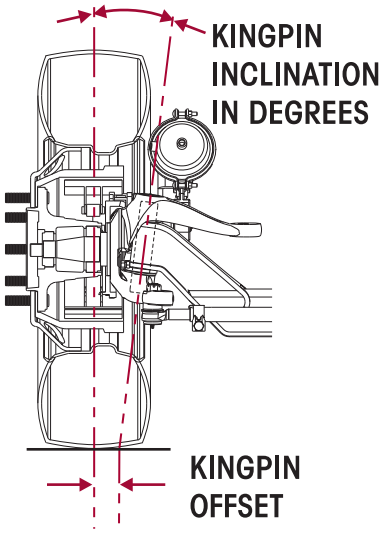

Kingpin Inclination (KPI) — The inward tilt of the kingpin from the vertical. This front suspension parameter has a pronounced effect on steering effort and returnability. As the front wheels are turned around an inclined kingpin, the front of the truck is lifted. This lifting of the vehicle is experienced as steering effort when the turn is executed and exhibits itself as recovery force when the steering wheel is released.

Kingpin Offset — The distance between the center of the tire patch and intersection of the kingpin axis with the ground. This parameter of front-end geometry is important in vehicles without power steering and has a major effect on static steering. If there is no kingpin offset, the tires must scrub around the center of the pin patch when turned in a static condition, resulting in higher static steering efforts.

Steering Arm — The component that connects the drag link to the axle knuckle assembly.

FIGURE 8-5

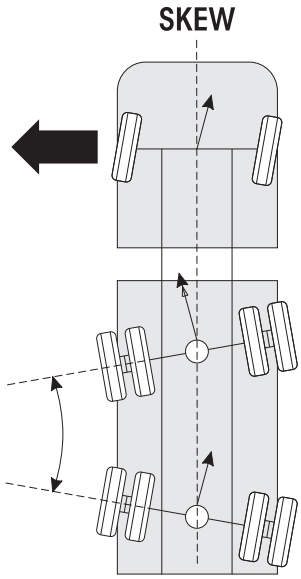

FIGURE 8-6

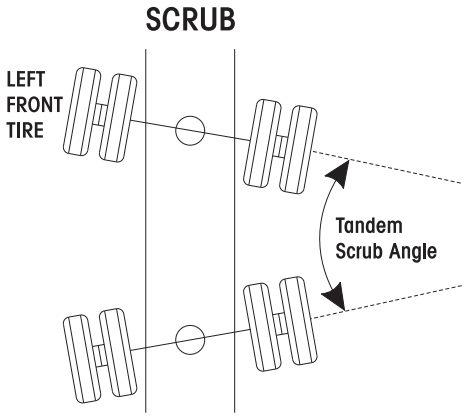

Scrub, Skew, Tram Angle or Parallelism — The angle formed by two thrust or tracking lines of a tandem (or multiple) axle vehicle. As indicated by the term “parallelism”, the ideal condition is when the two thrust lines for a 0° angle, or are parallel to each other. Positive skew or tram is when the distance between the right axle ends is less than the distance between the left.

Any scrub angle other than 0° will cause the tandem axles to work against each other. The steer axle must be turned to offset the “push” of the tandem axles to keep the vehicle moving straight ahead. This causes every tire on the vehicle to “scrub.” Tire wear from tandem scrubbing occurs at the leading edge of the steer tires in a pattern called “inside/outside” wear, that is, the inside edge of the left steer tire and the outside edge of the right steer tire will exhibit irregular wear for example. Additional tire wear may occur on all tandem axle tires.

FIGURE 8-7

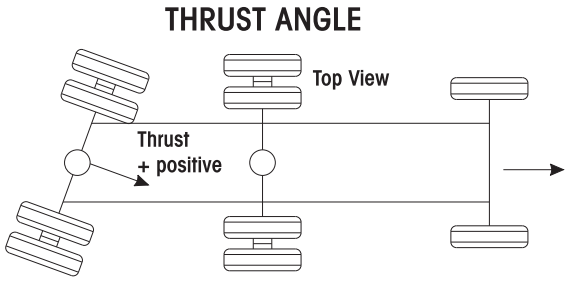

Thrust Angle, Tracking, or Square — The angle formed by the centerline of the vehicle frame (geometric centerline) and the direction that an axle points. As indicated by the term “square”, the ideal value for the angle is 0° or when the axle centerline is at 90° or perpendicular to the geometric centerline. Thrust or tracking to the right is positive, and to the left is negative.

A steering correction is required to offset the effect of the thrust angles and keeps the vehicle traveling in a straight line. It results in a lateral offset between the steer and drive axle tires commonly referred to as “dog tracking.”

Tie Rod Arm (Ackermann-Arm, Cross Tube Arm) — The component that transmits steering forces between left and right axle knuckle assemblies through the cross tube assembly.

FIGURE 8-8

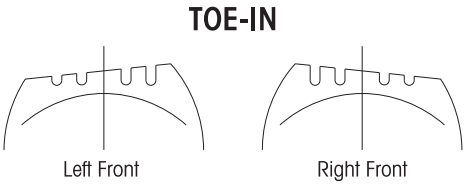

Toe-in — Is when the horizontal line intersects in front of the wheels, or the wheels are closer together in front than in the back. Toe-in is commonly designated as positive, toe-out as negative. Excessive toe-in wears the outside edge of the tires. Steer axle toe is adjustable to reduce wear to the leading edge of the tire and also to avoid road wander. Toe is adjusted in a static, unloaded condition so that the tires will run in a straight line under a dynamic, loaded condition.

FIGURE 8-9

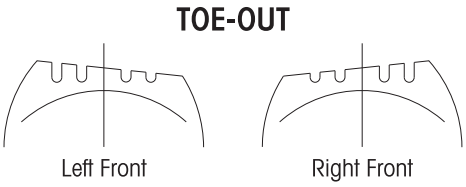

Toe-out — Is when the horizontal lines intersect behind the wheels, or the wheels are closer together in back than in front. Toe-in is commonly designated as positive, toe-out as negative. Excessive toe-out wears the inside edge of the tires. Steer axle toe is adjustable to reduce wear to the leading edge of the tire and also to avoid road wander. Toe is adjusted in a static, unloaded condition so that the tires will run in a straight line under a dynamic, loaded condition.

FIGURE 8-10

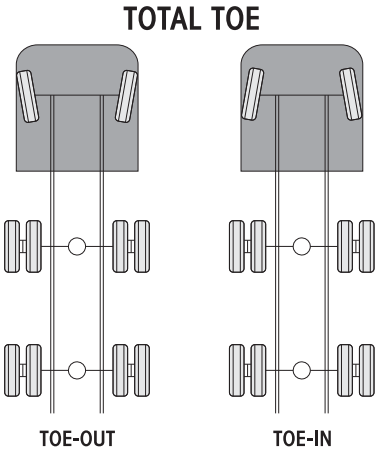

Toe-out on Turns — (See Ackermann Geometry). Excessive turning angles such as those encountered in pickup and delivery operations may contribute to premature tire wear. Be advised that the greater turning angles, the more that toe and camber change. If you have any doubt regarding the optimum turning angles for your operation, contact the vehicle's manufacturer, axle OEM, tire OEM and alignment equipment manufacturer for advice.

Total Toe — The angle formed by two horizontal lines through the planes of two wheels. Steer axle toe is adjustable to reduce wear to the leading edge of the tire and also to avoid road wander. Toe is adjusted in a static, unloaded condition so that the tires will run in a straight line under a dynamic, loaded condition.

INSPECTION PRIOR TO ALIGNMENT

WHEELS AND TIRES

Examine the following items:

- The tires are inflated to the manufacturer's specified tire pressure.
- The steer axle tires are the same size and type.
- The lug nuts are tightened to manufacturer's specified torque.
- The wheels are balanced.
- The wheels and tires are free of excessive wear and damage.
- Wheel bearing end play is within OEM specification.

FRONT SUSPENSION

Inspect the following:

- All fasteners are installed and tightened to the specified torque. See Torque Specification Section of this publication.
- Leaf springs are free of wear or damage.
- Air springs are free of wear or damage.
- Shock absorbers are free of wear and damage.
- Vehicle ride height for both the front and rear are within specification. Follow manufacturer's guidelines (if equipped).
- Front and rear spring mounts are free of wear or damage.

INSPECT TIE ROD ENDS

Perform "Tie Rod Inspection" procedure; refer to the Preventive Maintenance Section of this publication.

REAR AXLE AND REAR SUSPENSION

The rear axle can cause front tire wear. If the outer edge of one front tire is worn and the inner edge of the other front tire is worn, check the following:

- Make sure the rear axle (especially a tandem axle) is correctly aligned. Refer to the procedure from the manufacturer of the vehicle or the suspension.
- All fasteners including U-bolts (if applicable) are installed and tightened to the specified torque.
- The leaf springs are not worn or damaged.
- The bushings in the leaf springs are not worn or damaged.
- The torque rods (if used) are correctly adjusted (if adjustable).
- The frame is not bent or twisted.
- Refer to any additional recommendations and specifications from the manufacturer of vehicle on rear axles and suspensions. Reference the TMC (The Technology & Maintenance Council) Guidelines for Total Vehicle Alignment.

FRONT WHEEL ALIGNMENT

Hendrickson recommends technicians review TMC's publication TMC (The Technology & Maintenance Council) "Guidelines for Total Vehicle Alignment".

Refer to the AIRTEK Front Wheel Alignment Specifications Section of this publication.

Check total vehicle wheel alignment when any of the following occurs:

- Every 80,000 to 100,000 miles, or 12-18 months (normal maintenance).
- When the vehicle does not steer correctly.
- To correct a tire wear condition.
- There are two types of front wheel alignment:
  1. *Minor alignment* – a minor front wheel alignment is done for all normal maintenance conditions, see below.
  2. *Major alignment* – a major alignment is done when uneven or excessive tire wear is evident, or response at the steering wheel is sluggish, or the need for major wheel alignment check and adjustment is required, see below.

MINOR FRONT WHEEL ALIGNMENT

Perform the minor front wheel alignment in the following sequence:

1. Inspect all systems that affect wheel alignment. Refer to "Inspection Prior to Alignment" in this section.
2. Check the wheel bearing endplay.
3. Check and adjust toe.
4. Check and adjust the vehicle ride height as specified in the Preventive Maintenance Section of this publication.

MAJOR FRONT WHEEL ALIGNMENT

Be certain to follow wheel alignment inspection intervals as specified by the original equipment manufacturer. Before performing a major front wheel alignment it is recommended that alignment equipment calibration be checked to ensure proper vehicle alignment.

Major wheel alignment is accomplished in the following sequence of operation:

1. Inspect all the systems that influence the wheel alignment. Refer to "Inspection Prior to Alignment" in this section.
2. Check and adjust the maximum turn angle, refer to "Steering Stop Adjustment Procedure" in this section, see Figures 8-11 and 8-12.

FIGURE 8-11

FIGURE 8-12

3. If the vehicle is equipped with power steering, check the pressure relief in the power steering system and reset if necessary. Refer to vehicle manufacturer regarding the subject: Adjusting the Pressure Relief in the Power Steering System.
4. Check the turning angle. Refer to OEM specifications.

5. Check the kingpin (or steering axis) inclination. Refer to “Kingpin Inclination” under the Alignment Definitions in this section.

WARNING

AXLE CAMBER IS NOT ADJUSTABLE. DO NOT CHANGE THE AXLE CAMBER ANGLE OR BEND THE AXLE BEAM, SEE FIGURE 8-13. BENDING THE AXLE BEAM TO CHANGE THE CAMBER ANGLE CAN DAMAGE THE AXLE AND REDUCE AXLE STRENGTH, WILL VOID HENDRICKSON’S WARRANTY AND CAN CAUSE LOSS OF VEHICLE CONTROL, POSSIBLY CAUSING PERSONAL INJURY OR PROPERTY DAMAGE.

FIGURE 8-13

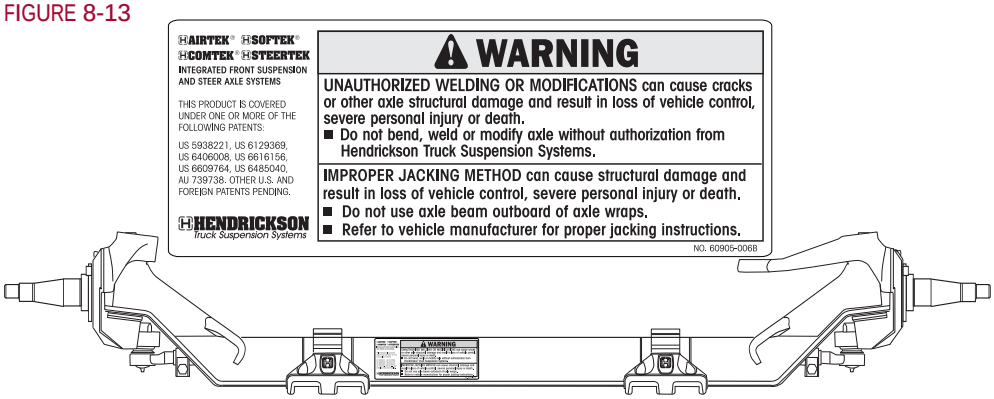

6. Check camber angle. DO NOT attempt to adjust camber. Refer to “Camber” under the Alignment Definitions in this section.
7. It is necessary to verify that all ride heights (front and rear) are within specifications prior to checking caster to get an accurate caster reading.
8 Check and adjust caster angle. Refer to “Caster” under the Alignment Definitions in this section.

NOTE

The use of two different angle caster shims will not change cross caster. Cross caster is the difference between the caster readings for left and right side of the vehicle.

9. Check and adjust toe-in, refer to Toe Setting in the Alignment & Adjustment section.

RIDE HEIGHT VERIFICATION

- MACK vehicles built with Post '07 Engine

  The height control valves are not supplied by Hendrickson for vehicles equipped with Post '07 Engines, although it is a required component. Hendrickson is not responsible for components supplied by the vehicle manufacturer. For assistance with inspection, maintenance and rebuild instructions on these components contact the vehicle manufacturer.

DUAL RIDE HEIGHT CONTROL VALVE VERIFICATION

- Mack vehicles built between 03/05 and 12/07

NOTE

The reference ride height measurements are different on the 12K/12.5K pound capacity than the 13.2K/14.6K pound capacity suspensions. Verify the suspension capacity, and ensure the proper ride height gauge is used.

AIRTEK HEIGHT GAUGE

- Lit No. 45745-170 — 12,000 and 12,500 pound capacity
- Lit No. 45745-195 — 13,200 and 14,600 pound capacity

1. Use a work bay with a level floor. Drive the vehicle slowly, straight ahead. Try to slacken or loosen the suspension as the vehicle is positioned. End with all the wheels positioned straight ahead. Try to roll to a stop without the brakes being applied.

2. Chock drive wheels. Do not set parking brake.

DANGER

AIR SPRING ASSEMBLIES MUST BE DEFLATED PRIOR TO LOOSENING ANY CLAMP GROUP HARDWARE. UNRESTRICTED AIR SPRING ASSEMBLIES CAN VIOLENTLY SHIFT. DO NOT INFLATE AIR SPRING ASSEMBLIES WHEN THEY ARE UNRESTRICTED. AIR SPRING ASSEMBLIES MUST BE RESTRICTED BY SUSPENSION OR OTHER ADEQUATE STRUCTURE. DO NOT INFLATE BEYOND PRESSURES RECOMMENDED BY AIR SPRING MANUFACTURER, CONTACT HENDRICKSON TECHNICAL SERVICES FOR DETAILS. IMPROPER USE OR OVER INFLATION MAY CAUSE AIR SPRING ASSEMBLIES TO BURST, CAUSING PROPERTY DAMAGE AND/OR SEVERE PERSONAL INJURY.

3. Cycle the air system. Detach the upper rubber grommet(s) of the height control valve linkage(s) from the upper stud and exhaust the suspension system air by lowering the height control valve linkage arm.
4. Re-attach the upper grommet of the height control valve linkage onto the upper stud to fill the suspension system with air. Wait until the airflow to front air springs has stopped.
5. a.) 12K/12.5K Capacity
   Hold the 45745-170 gauge vertically, see Figure 8-14. Place the gauge so that the upper notch feature is placed between the height control valve mounting bracket bolts and is flush against the bottom of the air spring bracket.

   b.) 13.2K/14.6K Capacity
   Hold the 45745-195 gauge upper notch feature against the outboard side of the height control valve mounting bracket and to ensure it is flush against the bottom of the upper air spring bracket, see Figure 8-15.

FIGURE 8-14
Shown for 12K/12.5K pound capacity

FIGURE 8-15
Shown for 13.2K/14.6K pound capacity

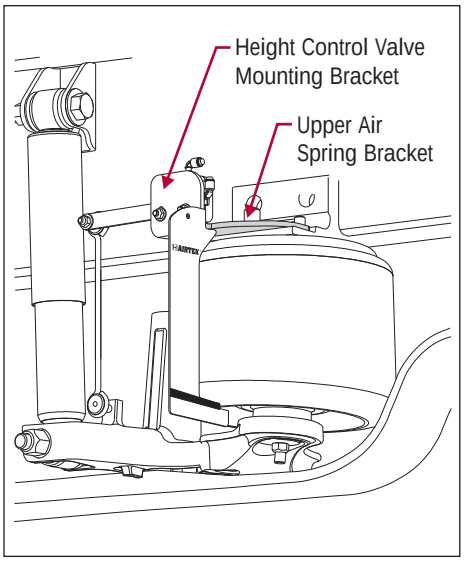

6. The air spring piston flange edge should contact the lower region marked “ACCEPTABLE.”
7. If the air spring piston flange edge contacts the “BELOW SPEC” region, the ride height is set too low and requires adjustment, see Figure 8-15. If the air spring piston flange contacts the “ABOVE SPEC” region, the ride height is set too high and requires adjustment.

   If a gauge is not available, measure the suspension reference ride height on the front axle (air spring height). Measurement can be taken from the bottom of the upper air spring bracket to the bottom of the air spring piston flange.

   - 12,000 and 12,500 pound capacity $7\frac{7}{8}$" ± $\frac{1}{8}$"
   - 13,200 and 14,600 pound capacity $8\frac{1}{8}$" ± $\frac{1}{8}$"

ADJUSTMENT ALL DUAL HEIGHT CONTROL VALVES MODELS

1. Verify that the air system is at full operating pressure.

SERVICE HINT

It is very important that the leveling valve be cycled completely before and after any ride height adjustments. Cycling of the leveling valve will help make the adjustment more accurate.

WARNING

PRIOR TO AND DURING DEFLATION AND INFLATION OF THE FRONT AIR SUSPENSION SYSTEM, ENSURE THAT ALL PERSONNEL AND EQUIPMENT ARE CLEAR FROM UNDER THE VEHICLE AND AROUND THE SERVICE AREA, FAILURE TO DO SO CAN CAUSE SERIOUS PERSONAL INJURY, DEATH, OR PROPERTY DAMAGE.

2. See additional Air Spring Cautions and Warnings in the Important Safety Notice Section of this publication prior to deflating or inflating the suspension system.
3. Cycle the air system. Detach the upper rubber grommet(s) of the height control valve linkage(s) from the upper stud and exhaust the suspension system air by lowering the height control valve linkage arm.
4. Refill the suspension by raising the height control valve arm(s) by hand, so that the air springs are above the proper ride height.
5. Lower the leveling valve arm(s) to exhaust the air system until the suspension is at the proper ride height as measured on the correct height gauge.
6. Use a ⅛" wooden dowel rod (golf tee) to set the neutral position for the height control valve(s) by aligning the hole in the leveling arm(s) with the hole in the height control valve cover, as shown in Figure 8-16. DO NOT use a metal rod or nail as this may cause damage to the height control valve.

FIGURE 8-16

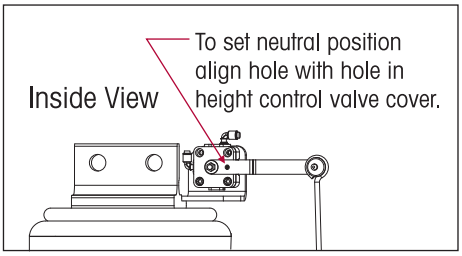

NOTE

Hendrickson recommends the following be performed during any type of ride height adjustment to help prevent socket head cap screws from loosening from the height control valve housing, and any subsequent air leaks from the height control valve.

Prior to adjusting the height control valve, clean the threads of the mounting fasteners of any debris and corrosion.

NOTE

The above procedure should also be performed in the event an air leak is detected in the height control valve. If air continues to leak after the socket head cap screws have been properly re-tightened, the height control valve should be replaced.

7. Adjust the height control valve by loosening the mounting locknuts and pivoting the valve body about the mounting bolt so the height control valve leveling arm stud inserts directly into the center of the hole on the rubber grommet(s) at the proper height. Check the rubber grommet(s) for any tearing or damage, replace as necessary.
8. Facing the air spring from the outboard side for the left side of the vehicle, pivot the valve body counter clockwise to increase the ride height and clockwise to decrease the ride height. For the right side of the vehicle, pivot the valve body clockwise to increase the ride height and counter clockwise to decrease the ride height.
9. Connect the height control valve arm(s) to the rubber grommet(s).
10. Tighten the mounting locknuts to manufacturer's specifications after the adjustment is made, see Figure 8-17.

11. Install a 5 mm allen wrench in the bottom socket head cap screws to prevent the screws from turning while re-tightening the locknuts. Remove the dowel from the height control valve(s).
12. Cycle the height control valve leveling arm(s) as stated in Step number 2.
13. Recheck the ride height on both sides of the vehicle.
14. Repeat Steps 2 through 10 until the ride height is within specification.

FIGURE 8-17

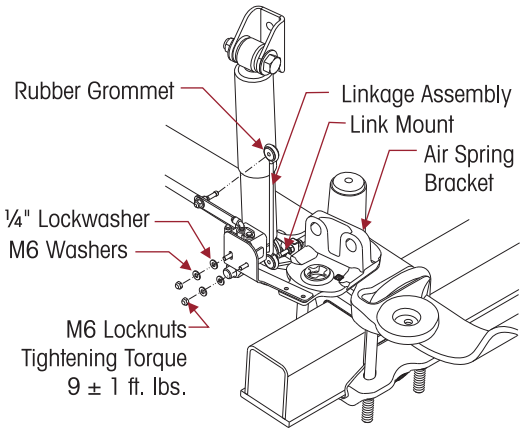

SINGLE RIDE HEIGHT CONTROL VALVE VERIFICATION

- MACK vehicles built prior to 03/05 not equipped with dual height control valves.

CAUTION

THE REFERENCE RIDE HEIGHT MEASUREMENTS ARE DIFFERENT ON THE 12,000/12,500 AND 13,200/14,600 POUND CAPACITY SUSPENSIONS. VERIFY SUSPENSION CAPACITY, AND ENSURE THE PROPER RIDE HEIGHT GAUGE IS USED.

AIRTEK HEIGHT GAUGE

- Lit No. 45745-170 — 12,000 and 12,500 pound capacity
- Lit No. 45745-195 — 13,200 and 14,600 pound capacity

1. Drive the vehicle onto a level surface.
2. Free and center all suspension joints by slowly moving vehicle back and forth several times without using the brakes. It is IMPORTANT when coming to a complete stop to make sure the brakes are released.
3. Chock drive wheels.
4. Detach the upper rubber grommet of the height control valve linkage from the upper stud and exhaust the suspension system air by lowering the height control valve linkage arm.
5. Re-attach the upper grommet of the height control valve linkage onto the upper stud to fill the suspension system with air. Wait until the airflow to front air springs has stopped.
6. a.) 12K/12.5K Capacity
   Hold the 45745-170 gauge vertically, see Figure 8-18. Place the gauge, so that the upper notch feature is placed between the height control valve bracket mounting bolts and is flush against the bottom of the air spring bracket.

   b.) 13.2K/14.6K Capacity
   Hold the 45745-195 gauge upper notch feature against the outboard side of the height control valve mounting bracket and is flush against the bottom of the upper air spring bracket, see Figure 8-19.
7. The air spring piston flange edge should contact the lower region marked “ACCEPTABLE”.
8. If the air spring piston flange edge contacts to the “BELOW SPEC” region, the ride height is set too low, see Figure 8-19. If the air spring piston flange contacts to the “ABOVE SPEC” region the ride height is set too high.

   If a gauge is not available, measure the suspension reference ride height on the front axle (air spring height). Measurement can be taken from the bottom of the upper air spring bracket to the bottom of the air spring piston flange.

   - 12,000 and 12,500 pound capacity $7\frac{7}{8}$" ± $\frac{1}{8}$"
   - 13,200 and 14,600 pound capacity $8\frac{1}{8}$" ± $\frac{1}{8}$"

FIGURE 8-18
Shown for 12K/12.5K pound capacity

FIGURE 8-19
Shown for 13.2K/14.6K pound capacity

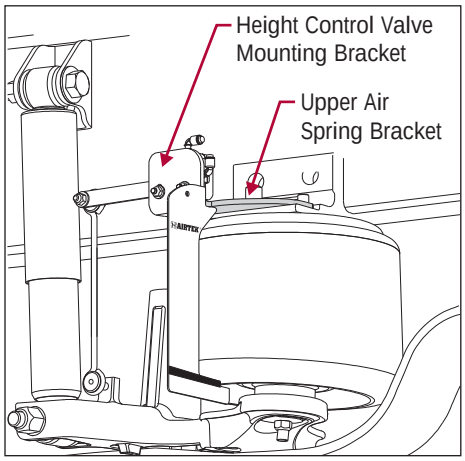

ADJUSTMENT ALL SINGLE HEIGHT CONTROL VALVE MODELS

Hendrickson recommends the following be performed during any type of ride height adjustment to help prevent socket head cap screws from loosening from the height control valve housing, and any subsequent air leaks from the height control valve.

1. Prior to adjusting the height control valve, clean the threads of the mounting fasteners of any debris and corrosion.
   - The above procedure should also be performed in the event an air leak is detected in the height control valve. If air continues to leak after the socket head cap screws have been properly re-tightened, the height control valve should be replaced.

SERVICE HINT

It is very important that the leveling valve be cycled completely before and after any ride height adjustments. Cycling of the leveling valve will help make the adjustment more accurate.

2. See additional Air Spring Cautions and Warnings in the Important Safety Notice Section of this publication prior to deflating or inflating the suspension system.
3. Detach the upper grommet of the height control valve linkage from the upper stud and exhaust suspension system air.
4. Adjust the height control valve by loosening the mounting locknuts and pivoting the valve body about the mounting bolt.
5. Facing the air spring from the outboard side of the vehicle, pivot the valve body counter clockwise to increase the ride height and clockwise to decrease the ride height.
6. After the adjustment is made, install an allen wrench in the bottom socket head cap screws on the height control valve housing to prevent the screws from turning while re-tightening the locknuts.
7. Tighten the mounting locknuts to vehicle manufacturer's specifications, see Figure 8-20.
8. Repeat Steps 2 through 8 until the air spring piston flange aligns into the "ACCEPTABLE" region of the gauge, see Figure 8-20.

FIGURE 8-20

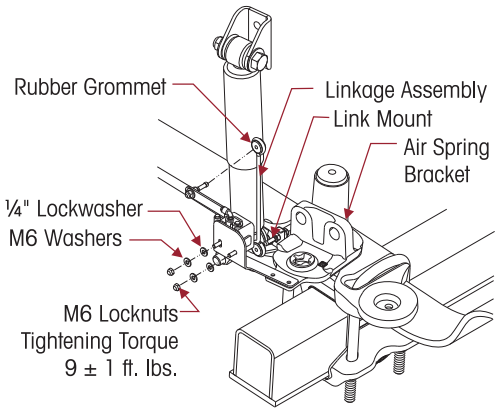

9. An easy way to remember the correct rotation of the valve is: Counter–clock-wise to lift, clockwise to reduce.

STEERING STOP

ADJUSTMENT PROCEDURE

When the axle or lower steering knuckle is replaced, the steering stop adjustment must be checked.

WARNING

ALWAYS CHECK/RESET THE STEERING GEAR BOX POPPET WHEN THE WHEEL CUT IS DECREASED. FOLLOW MANUFACTURER'S GUIDELINES FOR THE GEAR BOX POPPET RESETTING PROCEDURE. FAILURE TO DO SO CAN RESULT IN PREMATURE FAILURE OF THE AXLE OR STEERING KNUCKLE. THIS CONDITION CAN CAUSE LOSS OF VEHICLE CONTROL, POSSIBLE PERSONAL INJURY OR PROPERTY DAMAGE AND VOID WARRANTY.

1. Drive vehicle on turntables and chock the rear wheels.
2. Measure the wheel cut. The wheel cut is determined by steering the tires. Wheel cut is measured at the inside wheel only, therefore the tires must be turned to the full lock position for each right hand and left hand direction. Refer to the vehicle manufacturer for exact specifications.
3. Increase the wheel cut by loosening the jam nuts and screw the axle stops in clockwise.
4. Tighten the jam nuts.

NOTE

It is very important that the sides of the square head axle stops are set parallel to the axle beam to ensure a good contact point on the axle, see Figure 8-21.

FIGURE 8-21

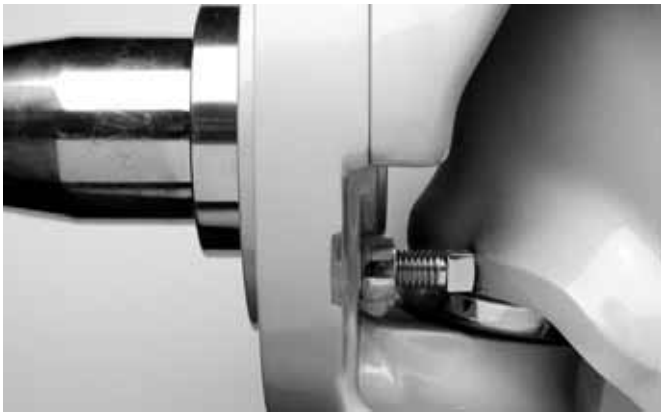

5. Decrease the wheel cut by loosening the jam nuts and screw the axle stops out counter–clockwise.
6. Tighten the jam nuts to 50 ± 10 foot pounds (68 ± 14 Nm).
7. Measure the wheel cut and check the tie rod clearance.

TOE SETTING

1. Place the vehicle on a level floor with the wheels in a straight ahead position.
2. Raise the vehicle and support the front axle with jack stands.
3. Use paint to mark the center area of tread on both steer axle tires around the complete outer diameter of the tires.
4. Scribe a line through both steer axle tires in the painted area around the complete outer diameter of the tires.
5. Raise the vehicle and remove the jack stands.
6. Set the vehicle on the ground.

NOTE

DO NOT measure toe-in with the front axle off the ground. The weight of the vehicle must be on the front axle when toe-in is measured.

7. Use a trammel bar and measure the distance between the scribe marks at the rear of the steer axle tires. Record the measurement.
8. Install the trammel bar and measure the distance between the scribe marks at the front of the steer axle tires. Record the measurement, see Figure 8-22.

FIGURE 8-22

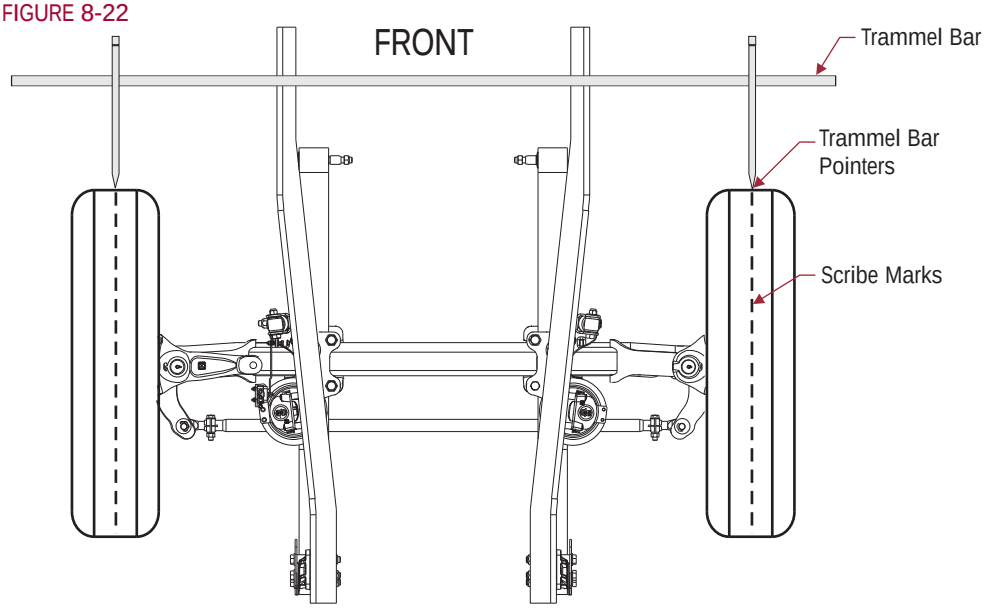

NOTE

When setting up the trammel bar the pointers should be level with the spindles at the front and rear of the steer axle tires.

9. To calculate the toe setting, subtract the front measurement from the rear measurement; the difference between the two will equal the toe-in/toe-out measurement.
10. If the toe measurement is not within the specifications of 0.060" $^{+0.00}/_{-0.060}$, it will be necessary to adjust the toe setting. Refer to the following procedure.
    a. Loosen the tie rod cross tube clamp bolts and locknuts.
    b. Turn the tie rod cross tube until the specified toe-in distance is achieved.

WARNING

THE THREADED PORTION OF THE TIE ROD END MUST EXTEND PAST THE SLOTS INTO THE TIE ROD CROSS TUBE, SEE FIGURE 8-23. FAILURE TO DO SO CAN CAUSE COMPONENT TO FAIL CAUSING LOSS OF VEHICLE CONTROL AND POSSIBLE PERSONAL INJURY OR PROPERTY DAMAGE.

    c. Tighten the bolt and locknut on the tie rod cross tube to 68 ± 8 foot pounds (92 ± 11 Nm) torque.

FIGURE 8-23

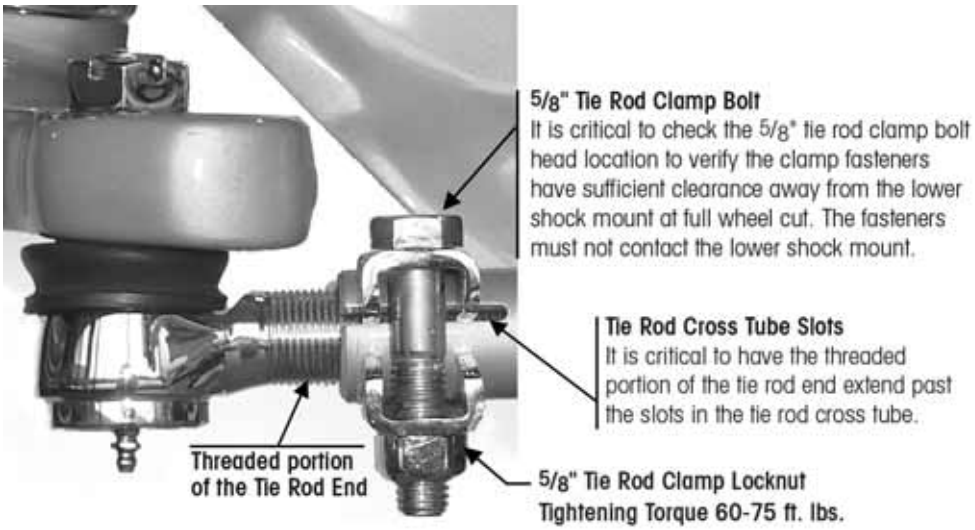

WARNING

IT IS CRITICAL TO CHECK THE ⅝" TIE ROD CLAMP BOLT HEAD LOCATION TO VERIFY THE CLAMP FASTENERS HAVE SUFFICIENT CLEARANCE AWAY FROM THE LOWER SHOCK MOUNT AT FULL WHEEL CUT. THE FASTENERS MUST NOT CONTACT THE LOWER SHOCK MOUNT. FAILURE TO DO SO CAN CAUSE ONE OR MORE COMPONENTS TO FAIL CAUSING LOSS OF VEHICLE CONTROL AND POSSIBLE PERSONAL INJURY OR PROPERTY DAMAGE.

11. Verify the ⅝" tie rod clamp bolt head does not contact the lower shock mount at full wheel cut, see Figure 8-23
12. Repeat Steps 1-10 until the correct toe setting is achieved.

SPRING EYE RE-TORQUE

This re-torque procedure is necessary when replacing

- Front hanger
- Shackle bracket
- Steel leaf spring

RE-TORQUE PROCEDURE

1. Chock the wheels.
2. Verify ride height.
3. Loosen the four (4) adapter locknuts.
4. Loosen the two (2) front spring eye locknuts.
5. Loosen the four (4) shackle locknuts, DO NOT loosen the shackle spacer bolt, see Figure 8-24.

FIGURE 8-24

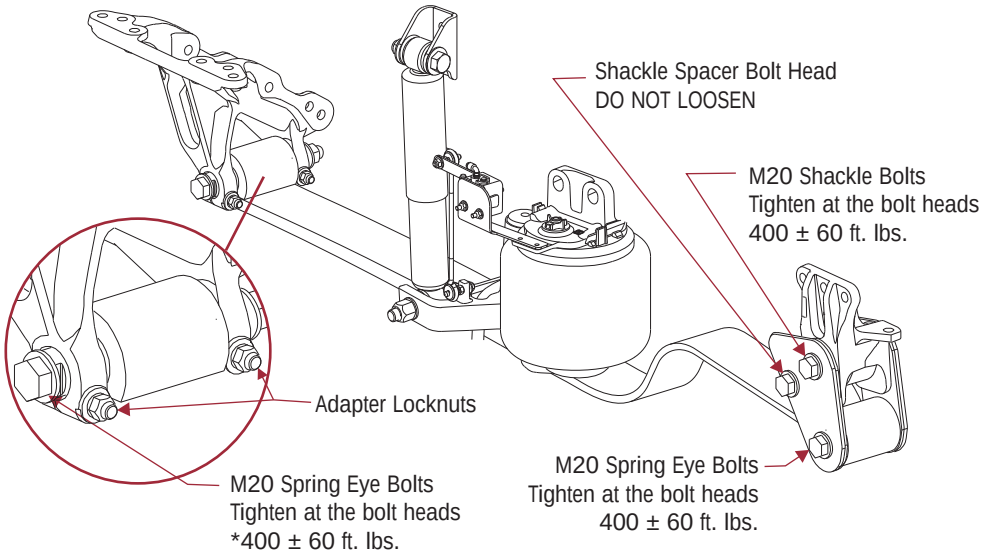

* Specifications provided, controlled and subject to change by vehicle manufacturer.

NOTE

DO NOT remove the front or rear spring eyebolts.

6. Let the vehicle settle to ride height.
7. Tighten the front M20 spring eye bolt heads to vehicle manufacturer's specifications.
8. Tighten the rear M20 spring eye bolt and shackle stop bolt heads to 400 ± 60 foot pounds (542 ± 81 Nm) torque.
9. Tighten the adapter bolts to the manufacturer's specification.

10. Affix a straight edge to the bottom of the frame rail in front of the air spring, see Figure 8-25.
11. With the vehicle on a level surface measure the distance from the top of the straight edge to the ground on both sides of the vehicle and record the measurements.
12. Measure the difference from one side to the other.
13. Do a road test and repeat measurement Steps 10 to 12.
14. If the measurement is less than 11 mm, the vehicle is level. If measurement is more than 11 mm, contact Hendrickson Tech Services.

FIGURE 8-25

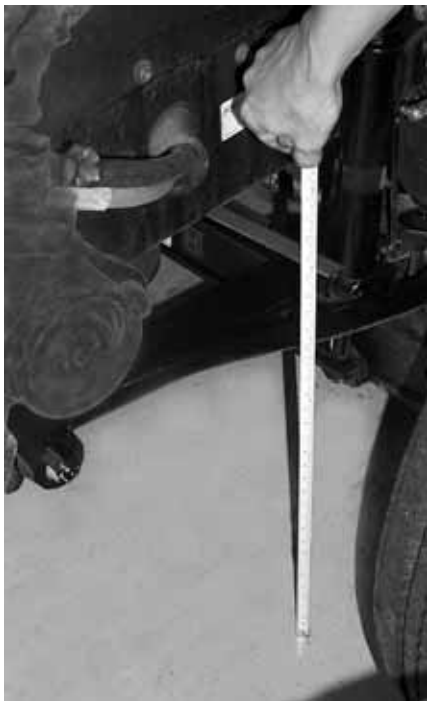

SECTION 9

Component Replacement

FASTENERS

Hendrickson recommends that when servicing the vehicle to replace the removed fasteners with new equivalent fasteners for AIRTEK and STEERTEK components. Maintain correct torque values at all times. Check torque values as specified. See Hendrickson's Torque Specifications Section of this publication. If non-Hendrickson fasteners are used follow the torque specifications listed in the vehicle manufacturer's service manual.

HEIGHT CONTROL VALVE

- Mack vehicles built after 12/07

  The height control valve is not supplied by Hendrickson for vehicles equipped with Post '07 Engine, although it is a required component. Hendrickson is not responsible for components supplied by the vehicle manufacturer. For assistance with inspection, maintenance and rebuild instructions on these components see vehicle manufacturer.

- Mack vehicles built prior To 12/07

  This procedure is for servicing height control valve supplied by Hendrickson. Contact the vehicle manufacturer for instructions when servicing a height control valve not supplied by Hendrickson.

  Prior to March 2005, some Mack vehicle configurations required dual height control valves. As of March 2005 all Mack vehicles equipped with the AIRTEK suspension have been and continue to be equipped with dual height control valves.

DISASSEMBLY

1. Drain the air from the secondary air tank.

WARNING

PRIOR TO AND DURING DEFLATION AND INFLATION OF THE FRONT AIR SUSPENSION SYSTEM, ENSURE THAT ALL PERSONNEL AND EQUIPMENT ARE CLEAR FROM UNDER THE VEHICLE AND AROUND THE SERVICE AREA, FAILURE TO DO SO CAN CAUSE SERIOUS PERSONAL INJURY, DEATH, OR PROPERTY DAMAGE.

2. See additional Air Spring Cautions and Warnings in the Important Safety Notice Section of this publication prior to deflating or inflating the suspension system.
3. Deflate the air springs by removing the height control valve linkage(s) at the rubber grommet(s) and lowering the height control linkage arm(s). This will exhaust the air pressure in the air springs.

CAUTION

THE PUSH-TO-CONNECT FITTINGS ON AIRTEK AIR SPRINGS AND HEIGHT CONTROL VALVES ARE NON-SERVICEABLE. IT IS NECESSARY TO CLEAN THE DIRT AND DEBRIS AWAY FROM THE PUSH-TO-CONNECT FITTINGS AND THE AIR LINES TO HELP PREVENT ANY FOREIGN MATERIAL FROM ENTERING THE AIR SPRING, AIR SYSTEM OR DAMAGING THE PUSH-TO-CONNECT FITTINGS. CLEAN PUSH-TO-CONNECT FITTINGS USING SOAPY WATER AND A SOFT BRISTLED BRUSH AND DRY WITH COMPRESSED AIR.

4. Remove the air lines from the height control valve(s), see Figure 9-1. The air lines are push-to-connect. Push in on the air line to release tension, push down on the collar and pull out the air line.
5. Remove the two mounting locknuts and washers.
6. Remove the height control valve.

FIGURE 9-1

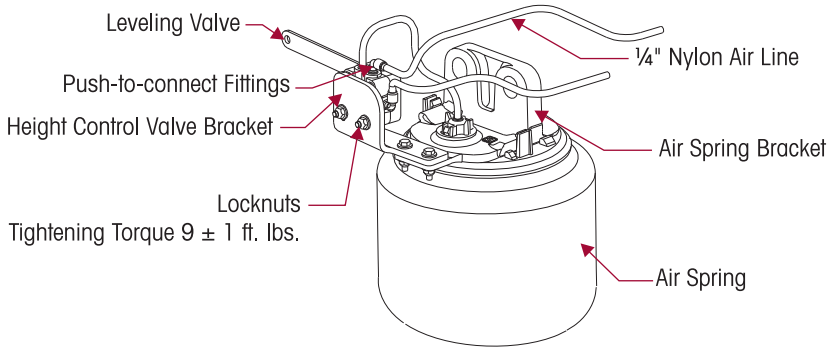

ASSEMBLY

1. Attach the height control valve on the mounting bracket as shown in Figure 9-1.
2. Attach the washers and the locknuts. DO NOT tighten the locknuts to specified torque until after the proper ride height is attained. Mount the height control valve parallel to the flange of the upper air spring bracket, see Figure 9-1.

SERVICE HINT

When replacing or installing nylon air line tubing into quick-connect fittings it is critical that the end of the air line is cut square. Improper cut of the end of the air line tubing can cause the air line to seat improperly in the quick connect fitting causing air leakage.

3. Attach the air lines to the height control valve(s), see Figure 9-2.
4. Install the height control valve linkage assembly(s).
5. Adjust the height control valve(s) to proper specifications (refer to Alignment & Adjustments Section of this publication for proper ride height adjustment) as determined by axle capacity:
   - 12,000 and 12,500 pound capacity 7⁷/₈" ± ¹/₈"
   - 13,200 and 14,600 pound capacity 8¹/₈" ± ¹/₈"
6. Tighten the locknuts to 🔧 9 ± 1 foot pounds (12 Nm) torque, see Figure 9-3.

FIGURE 9-2

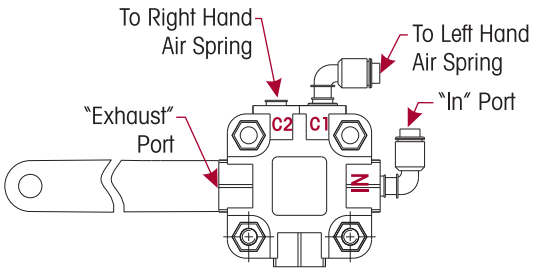

FIGURE 9-3

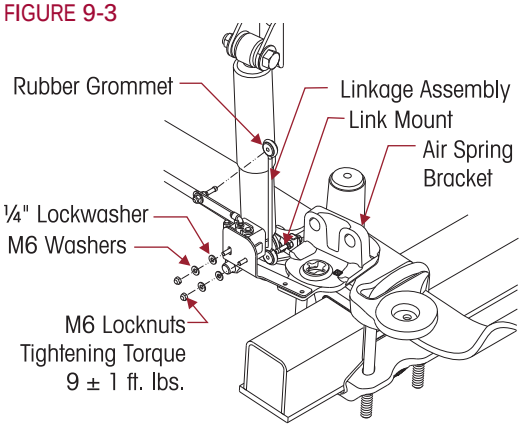

AIR SPRING (12,000/12,500 POUND CAPACITY)

SERVICE NOTE

Vehicles built between March 2005 and June 2007 equipped with dual height control valve **must** use Air Spring with Support Plate Service Kit No. 60961-182. Refer to Hendrickson Assembly Instruction literature number 59310-040 for more information.

NOTE

Prior to March 2005, some Mack vehicle configurations required dual height control valves. As of March 2005 all Mack vehicles equipped with the AIRTEK suspension have been and continue to be equipped with dual height control valves.

DISASSEMBLY

1. Place the vehicle on level floor.
2. Chock the wheels.
3. Support the frame with frame stands.

WARNING

WHEN SERVICING THE VEHICLE OR ATTACHING AN AIR SPRING AND THE VEHICLE IS ON THE GROUND, PRIOR TO AIRING THE SUSPENSION SYSTEM MAKE CERTAIN THE AIR SPRING LOCATOR IS INDEXED INTO THE UPPER AIR SPRING BRACKET PROPERLY, AND THE AIR SPRING IS FULLY SEATED ON THE TOP PAD. FAILURE TO FOLLOW THESE INSTRUCTIONS CAN RESULT IN PREMATURE AIR SPRING FAILURE, CAUSE PERSONAL INJURY, OR PROPERTY DAMAGE.

WARNING

PRIOR TO AND DURING DEFLATION AND INFLATION OF THE FRONT AIR SUSPENSION SYSTEM, ENSURE THAT ALL PERSONNEL AND EQUIPMENT ARE CLEAR FROM UNDER THE VEHICLE AND AROUND THE SERVICE AREA, FAILURE TO DO SO CAN CAUSE SERIOUS PERSONAL INJURY, DEATH, OR PROPERTY DAMAGE.

4. See additional Air Spring Cautions and Warnings in the Important Safety Notice Section of this publication prior to deflating or inflating the suspension system.
5.
   - Mack vehicles built with Post '07 Engine are equipped with the vehicle manufacturer's height control valves – exhaust the air from the system per the vehicle manufacturer's guidelines.
   - Mack vehicles built with Pre '07 Engine are equipped with Hendrickson height control valve(s): Remove the air from the air system by disconnecting the height control valve linkage(s) at the rubber grommet(s) and allowing the lever to drop. This will exhaust air from the system.

WARNING

IF THE AIR SPRING IS TO BE RE-INSTALLED; INSPECT LOCK-TABS FOR DAMAGE OR CRACKS PRIOR TO RE-INSTALLATION. CARE MUST BE TAKEN TO REMOVE DIRT AND DEBRIS FROM THE PUSH-TO-CONNECT FITTING. FAILURE TO DO SO COULD RESULT IN THE PUSH-TO-CONNECT FITTING FAILING TO SEAL WITH THE AIR LINE.

6. Disconnect the air line to the air spring.
7. Raise the frame to allow for air spring removal.
8. Separate the air spring from the upper air spring bracket by applying downward pressure on air spring, see Figure 9-4, pushing outward on the lock-tabs outside the bracket, and inward on inlet lock-tabs, see Figure 9-6. This will dislodge the air spring from the upper air spring bracket.
9. Apply upward pressure between the base of the air spring and the top pad. This will dislodge the air spring from the top pad, see Figure 9-5.
10. Remove the air spring.

FIGURE 9-4

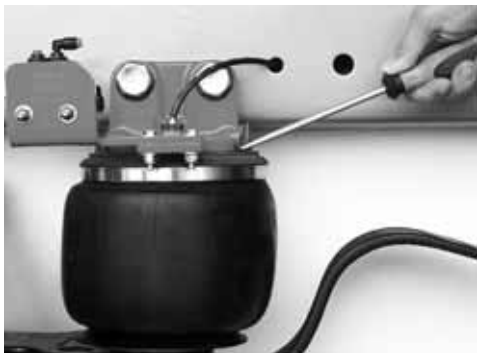

FIGURE 9-5

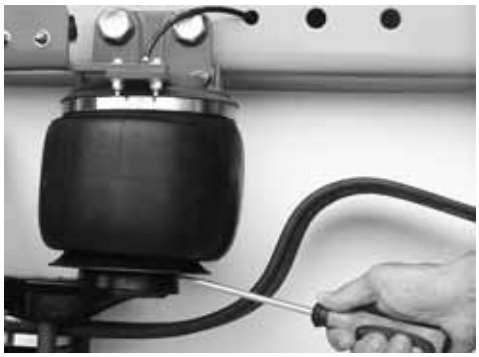

ASSEMBLY

1. Insert the air spring into the top pad. Verify the lock tabs click in place.
2. Compress the air spring and slide into vertical position. There is a locating nodule on the air spring to index the position in the upper air spring bracket.
3. Pull the air spring up into the upper air spring bracket until the air spring snaps into place. Verify all four lock-tabs are engaged, see Figure 9-6.

FIGURE 9-6

SERVICE HINT

When replacing or installing nylon air line tubing into quick-connect fittings it is critical that the end of the air line is cut square. Improper cut on the end of the air line tubing can cause the air line to seat improperly in the quick connect fitting causing air leakage.

4. Install the air line into the air spring.

WARNING

WHEN SERVICING VEHICLE OR ATTACHING AN AIR SPRING AND THE VEHICLE IS ON THE GROUND, PRIOR TO AIRING UP THE SUSPENSION SYSTEM MAKE CERTAIN THE AIR SPRING LOCATOR IS INDEXED INTO THE UPPER AIR SPRING BRACKET PROPERLY, THE LOCK TABS ARE SNAPPED INTO PLACE, AND THE AIR SPRING IS FULLY SEATED ON THE AIR SPRING BRACKET AND TOP PAD. RESULT IN PREMATURE AIR SPRING FAILURE AND CAUSE PERSONAL INJURY, OR PROPERTY DAMAGE.

5. Air up the suspension.
6. Check the air spring for leaks.
7. Check the ride height and adjust if necessary. Refer to Alignment & Adjustments Section of this publication for the proper ride height adjustment.
8. Remove the wheel chocks.

AIR SPRING (13,200 & 14,600 pound capacity)

DISASSEMBLY

1. Place vehicle on level floor.
2. Chock the wheels.
3. Support the frame with frame stands.

WARNING

PRIOR TO AND DURING DEFLATION AND INFLATION OF THE FRONT AIR SUSPENSION SYSTEM, ENSURE THAT ALL PERSONNEL AND EQUIPMENT ARE CLEAR FROM UNDER THE VEHICLE AND AROUND THE SERVICE AREA, FAILURE TO DO SO CAN CAUSE SERIOUS PERSONAL INJURY, DEATH, OR PROPERTY DAMAGE.

4. See additional Air Spring Cautions and Warnings in the Important Safety Notice Section of this publication prior to deflating or inflating the suspension system.
5.
   - Mack vehicles built with Post '07 Engine are equipped with the vehicle manufacturer's height control valves – exhaust the air from the system per the vehicle manufacturer's guidelines.
   - Mack vehicles built with Pre '07 Engine are equipped with Hendrickson height control valve(s): Remove the air from the air system by disconnecting the height control valve linkage(s) at the rubber grommet(s) and allowing the lever to drop. This will exhaust air from the system.

WARNING

IF THE AIR SPRING IS TO BE RE-INSTALLED; INSPECT LOCK-TABS FOR DAMAGE OR CRACKS PRIOR TO RE-INSTALLATION. CARE MUST BE TAKEN TO REMOVE DIRT AND DEBRIS FROM THE PUSH-TO-CONNECT FITTING. FAILURE TO DO SO COULD RESULT IN THE PUSH-TO-CONNECT FITTING FAILING TO SEAL WITH THE AIR LINE.

NOTE

Prior to March 2005, some Mack vehicle configurations required dual height control valves. As of March 2005 all Mack vehicles equipped with the AIRTEK suspension have been and continue to be equipped with dual height control valves.

6. Disconnect the air line(s) from the air spring(s).
7. Remove the M20 locknut from the top of the air spring and the M12 locknut and air spring adapter from the bottom of the air spring, see Figure 9-8.
8. Remove the air spring.

FIGURE 9-7

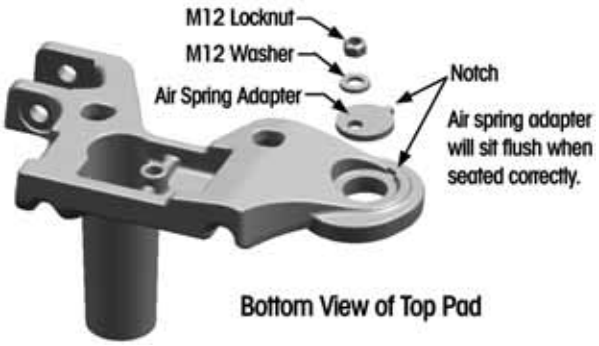

ASSEMBLY

1. Insert the air spring into the top pad. Index the air spring adapter into the bottom of the top pad, see Figure 9-7. Verify that the air spring adapter notch is properly indexed into the notch in the bottom of the top pad.

CAUTION

IT IS CRITICAL THAT THE AIR SPRING ADAPTER BE FULLY SEATED INTO THE BOTTOM OF THE TOP PAD. FAILURE TO FOLLOW THESE INSTRUCTIONS COULD RESULT IN PREMATURE AIR SPRING AND/OR AIR SPRING HARDWARE FAILURE AND VOID WARRANTY.

FIGURE 9-8

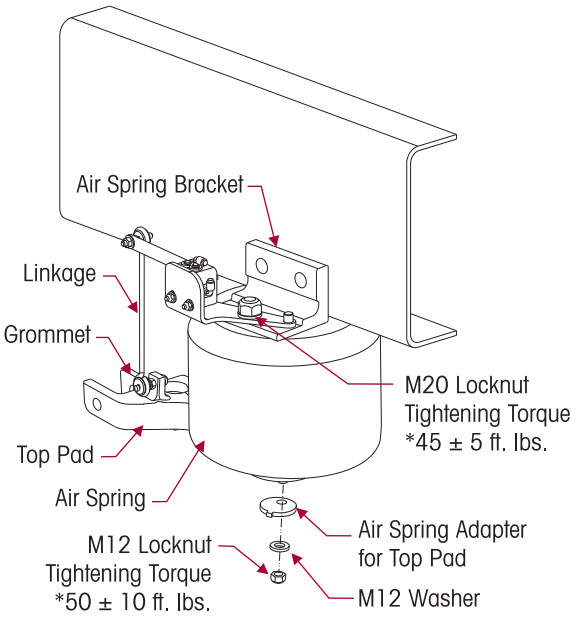

* Specifications provided, controlled and subject to change by vehicle manufacturer

2. Install the bottom M12 washer and locknut. Hand tighten, DO NOT tighten to torque at this time.
3. Compress the air spring and insert into the upper air spring bracket in the proper orientation, and install the upper M20 locknut. The air spring stud is indexed through the air spring bracket and the height control valve bracket, see Figure 9-8. Tighten to the vehicle manufacturer's torque specifications.
4. Tighten the lower air spring M12 locknut to the vehicle manufacturer's torque specifications, see Figure 9-8.
5. Install the air line(s) into the air spring(s).
6. Install the height control valve linkage and inflate the suspension to normal operating pressure.
7. Check the air spring for leaks.
8. Check the ride height and adjust if necessary. Refer to Alignment & Adjustments Section of this publication for the proper ride height adjustment.
9. Remove the wheel chocks.

RUBBER AXLE STOP

REMOVAL

1. Insert a small pry bar between the rubber axle stop and the inside of the bump stop pedestal.
2. Apply downward force on the pry bar and pull the rubber axle stop out of the bump stop pedestal, see Figure 9-9.
3. Inspect the bump stop pedestal and frame rail flange for any contact damage.
4. Clean any debris from inside the bump stop pedestal.

FIGURE 9-9

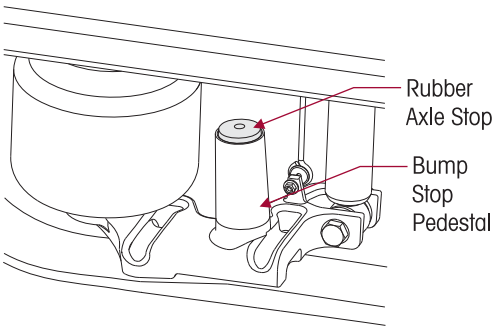

INSTALLATION

1. Lubricate the new rubber axle stop with soapy water.
2. Install the rubber axle stop in the bump stop pedestal.
3. Apply downward force on the rubber axle stop until it is seated firmly in the bump stop pedestal.

FRONT LEAF SPRING HANGER

The front leaf spring hangers are furnish by vehicle manufacturer. Please refer to the vehicle manufacturer's maintenance manual for replacement instructions.

SHACKLE BRACKET

DISASSEMBLY

1. Chock the wheels.
2. Support the frame with frame stands.

WARNING

PRIOR TO AND DURING DEFLATION AND INFLATION OF THE FRONT AIR SUSPENSION SYSTEM, ENSURE THAT ALL PERSONNEL AND EQUIPMENT ARE CLEAR FROM UNDER THE VEHICLE AND AROUND THE SERVICE AREA, FAILURE TO DO SO CAN CAUSE SERIOUS PERSONAL INJURY, DEATH, OR PROPERTY DAMAGE.

3. See additional Air Spring Cautions and Warnings in the Important Safety Notice Section of this publication prior to deflating or inflating the suspension system.
4.
   - Mack vehicles built with Post '07 Engine are equipped with the vehicle manufacturer's height control valves – exhaust the air from the system per the vehicle manufacturer's guidelines.
   - Mack vehicles built with Pre '07 Engine are equipped with Hendrickson height control valve(s): Remove the air from the air system by disconnecting the height control valve linkage(s) at the rubber grommet(s) and allowing the lever to drop. This will exhaust air from the system.
5. Disconnect the air lines from air springs.
6. Remove the rear M20 spring eye, shackle pivot and shackle stop bolts, washers and locknuts. Remove the shackle stop spacer.

SERVICE HINT

A bottle jack may be required to raise the axle slightly to facilitate removal of the rear spring eye bolt.

7. Remove the hardware from the shackle bracket. See vehicle manufacturer's guidelines.
8. Remove the Shackle bracket from the vehicle, see Figure 9-10.
9. Inspect the shackle assembly and both thrust washers for excessive wear or damage. See thrust washer Inspection in the Preventive Maintenance Section of this publication.
10. If damaged or worn excessively, replace with Hendrickson Genuine Parts as detailed in Component Replacement Section of this publication.

ASSEMBLY

1. Install the shackle bracket on the frame.
2. Install new hardware. Follow the vehicle manufacturer's guidelines.
3. Install the thrust washers, shackle plates and shackle stop bolt, shackle stop spacer assembly with the M20 bolts, washers and locknuts, see Figure 9-10.
4. Remove the frame stands and lower frame.
5. Install the air lines into the air springs.
6. Install the height control valve linkage and inflate the suspension to normal operating pressure (ride height).
7. Tighten the M20 bolt heads to 400 ± 60 foot pounds (542 ± 81 Nm) torque.
8. Remove the wheel chocks.

FIGURE 9-10

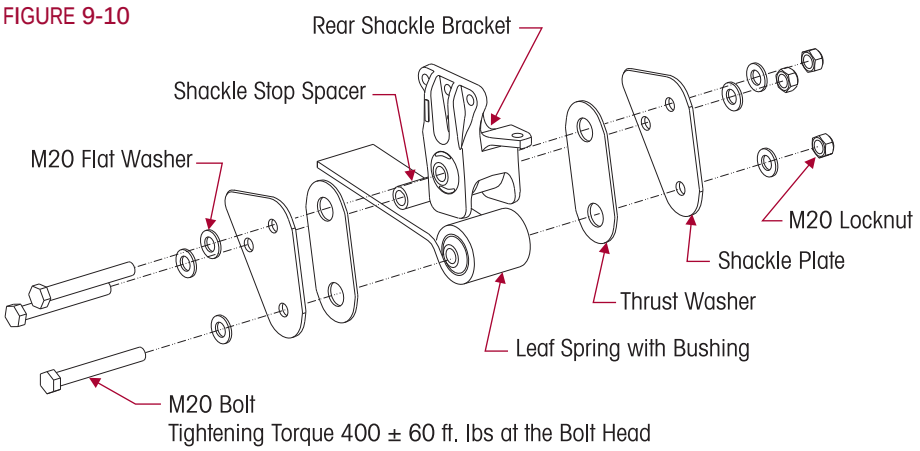

THRUST WASHERS

DISASSEMBLY

1. Chock the wheels.

WARNING

PRIOR TO AND DURING DEFLATION AND INFLATION OF THE FRONT AIR SUSPENSION SYSTEM, ENSURE THAT ALL PERSONNEL AND EQUIPMENT ARE CLEAR FROM UNDER THE VEHICLE AND AROUND THE SERVICE AREA, FAILURE TO DO SO CAN CAUSE SERIOUS PERSONAL INJURY, DEATH, OR PROPERTY DAMAGE.

2. See additional Air Spring Cautions and Warnings in the Important Safety Notice Section of this publication prior to deflating or inflating the suspension system.
3. - Mack vehicles built with Post '07 Engine are equipped with the vehicle manufacturer's height control valves – exhaust the air from the system per the vehicle manufacturer's guidelines.
   - Mack vehicles built with Pre '07 Engine are equipped with Hendrickson height control valve(s): Remove the air from the air system by disconnecting the height control valve linkage(s) at the rubber grommet(s) and allowing the lever to drop. This will exhaust air from the system.
4. Remove the air lines from the air springs.
5. Support the frame with frame stands.
6. Remove the M20 spring eye, shackle pivot and shackle stop bolts, washers and locknuts. Remove the shackle stop spacer.
7. Remove the shackle plates and thrust washers, see Figure 9-10.

SERVICE HINT

A bottle jack may be required to raise the axle slightly to facilitate removal of the rear spring eye bolt.

ASSEMBLY

1. Raise the axle.
2. Install the NEW thrust washers, shackle plates and shackle stop spacer with the M20 bolts, washers and locknuts.
3. Remove frame stands and lower the frame.
4. Install air lines into the air springs.
5. Install the height control valve linkage and inflate the suspension to normal operating pressure.
6. Tighten the M20 at the bolt heads to 400 ± 60 foot pounds (542 ± 81 Nm) torque, see Figure 9-10.
7. Remove the wheel chocks.

LEAF SPRING

DISASSEMBLY

1. Place the vehicle on a level floor.
2. Chock the wheels.

WARNING

PRIOR TO AND DURING DEFLATION AND INFLATION OF THE FRONT AIR SUSPENSION SYSTEM, ENSURE THAT ALL PERSONNEL AND EQUIPMENT ARE CLEAR FROM UNDER THE VEHICLE AND AROUND THE SERVICE AREA, FAILURE TO DO SO CAN CAUSE SERIOUS PERSONAL INJURY, DEATH, OR PROPERTY DAMAGE.

3. See additional Air Spring Cautions and Warnings in the Important Safety Notice Section of this publication prior to deflating or inflating the suspension system.
4.
   - Mack vehicles built with Post '07 Engine are equipped with the vehicle manufacturer's height control valves – exhaust the air from the system per the vehicle manufacturer's guidelines.
   - Mack vehicles built with Pre '07 Engine are equipped with Hendrickson height control valve(s): Remove the air from the air system by disconnecting the height control valve linkage(s) at the rubber grommet(s) and allowing the lever to drop. This will exhaust air from the system.

CAUTION

THE PUSH-TO-CONNECT FITTINGS ON AIRTEK AIR SPRINGS AND HEIGHT CONTROL VALVES ARE NON-SERVICEABLE. IT IS NECESSARY TO CLEAN THE DIRT AND DEBRIS AWAY FROM THE PUSH-TO-CONNECT FITTINGS AND THE AIR LINES TO HELP PREVENT ANY FOREIGN MATERIAL FROM ENTERING THE AIR SPRING, AIR SYSTEM OR DAMAGING THE PUSH-TO-CONNECT FITTINGS. CLEAN PUSH-TO-CONNECT FITTINGS USING SOAPY WATER AND A SOFT BRISTLED BRUSH AND DRY WITH COMPRESSED AIR.

5. Disconnect the air lines at the air springs.
6. Raise the vehicle.
7. Support the frame with frame stands.
8. Suspend the front axle to remove the load from leaf spring assembly.
9. Remove the air spring, see Air Spring Disassembly in this section.
10. Support the axle with a jack.
11. Remove the front and rear spring eyebolts and fasteners.

SERVICE HINT

To ease in the removal of the spring eyebolts it may be necessary to raise the axle slightly.

DANGER

AIR SPRING ASSEMBLIES MUST BE DEFLATED PRIOR TO LOOSENING ANY CLAMP GROUP HARDWARE. UNRESTRICTED AIR SPRING ASSEMBLIES CAN VIOLENTLY SHIFT. DO NOT INFLATE AIR SPRING ASSEMBLIES WHEN THEY ARE UNRESTRICTED. AIR SPRING ASSEMBLIES MUST BE RESTRICTED BY SUSPENSION OR OTHER ADEQUATE STRUCTURE. DO NOT INFLATE BEYOND PRESSURES RECOMMENDED BY AIR SPRING MANUFACTURER, CONTACT HENDRICKSON TECHNICAL SERVICES FOR DETAILS. IMPROPER USE OR OVER INFLATION MAY CAUSE AIR SPRING ASSEMBLIES TO BURST, CAUSING PROPERTY DAMAGE AND/OR SEVERE PERSONAL INJURY.

12. Remove the clamp group M20 Grade 8 locknuts and discard.

WARNING

DO NOT USE A CUTTING TORCH TO REMOVE CLAMP GROUP BOLTS OR ATTACHING FASTENERS. THE USE OF SUCH HEAT ON SUSPENSION COMPONENTS CAN ADVERSELY AFFECT THE STRENGTH OF THESE PARTS. A COMPONENT DAMAGED IN THIS MANNER CAN RESULT IN THE LOSS OF VEHICLE CONTROL AND POSSIBLE PERSONAL INJURY OR PROPERTY DAMAGE.

13. Remove the lower shock bolt.
14. Remove the M20 clamp group U-bolts/hex bolts, the top pad, Z spacer (if equipped), galvanized liner and the bottom axle wrap, see Figure 9-11.
15. Remove the leaf spring assembly.

FIGURE 9-11

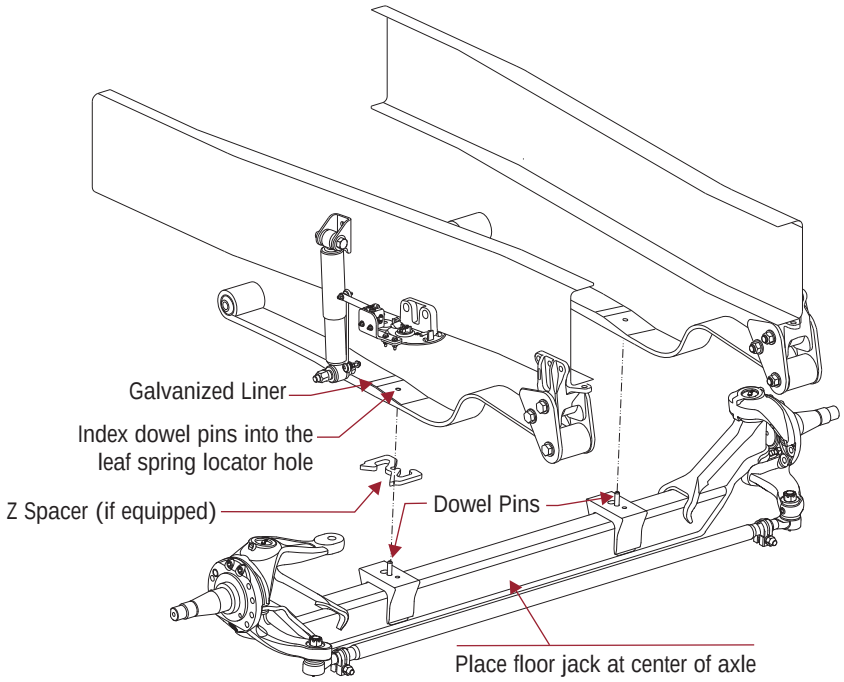

ASSEMBLY

1. Install the leaf spring onto the axle over dowel pin located on the top axle wrap, see Figure 9-11.
2. Install the new galvanized liner and the top pad onto the leaf spring.
3. Remove and replace the bottom axle wrap liner located in bottom axle wrap.
4. Install the bottom axle wrap.
5. Install the new M20 clamp group U-bolts/hex bolts, washers, and the new locknuts. The locknuts must be replaced when the clamp group is removed, to prevent premature bolt fatigue.
6. Snug the clamp group, DO NOT tighten at this time.
7. Raise the axle and the leaf spring assembly into the front hanger and rear shackle.
8. Install the M20 x 230 mm hex bolt in the front hanger. Snug bolt, DO NOT tighten at this time.
9. Install the M20 x 160 mm hex bolt in the shackle bracket. Snug bolt, DO NOT tighten at this time.
10. Ensure that the clamp group is properly aligned and the U-bolts/hex bolts are seated in the top pad, and the bottom axle wrap is centered against the top axle wrap, see Figure 9-12.

NOTE — The clamp group U-bolt locknuts and hex bolt locknuts have the same torque value.

FIGURE 9-12 Shown vehicles built with U-bolts • Post '07 Engine

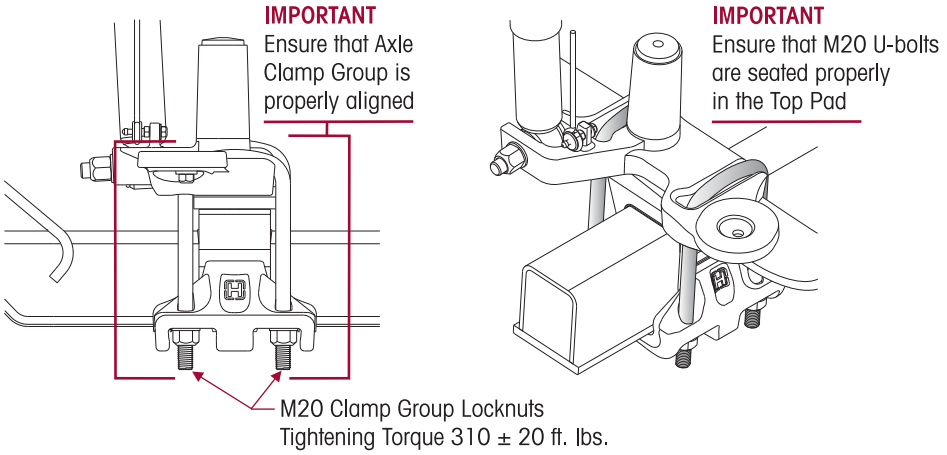

FIGURE 9-13

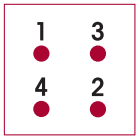

11. Tighten the clamp group locknuts evenly in 50 foot pounds increments to 310 ± 20 foot pounds (420 ± 27 Nm) torque in the proper pattern to achieve uniform bolt tension, see Figure 9-13.
12. Install the air spring.
13. Remove the frame supports and load the front axle with the vehicle weight.
14. Install the air lines, and air up the vehicle.
15. Install the height control valve linkage and inflate the suspension to normal operating pressure (ride height).
16. Verify the vehicle is at the proper ride height. See Alignment and Adjustment Section of this publication.
17. Tighten the front spring eye M20 bolt head to 400 ± 60 foot pounds (542 ± 81 Nm) torque, see Figure 9-14.
18. Install and tighten the adapter bolts to vehicle manufacturer's specification, see Figure 9-14.
19. Tighten the rear spring eye M20 bolt heads to 400 ± 60 foot pounds (542 ± 81 Nm) torque.
20. Remove the wheel chocks.

FIGURE 9-14

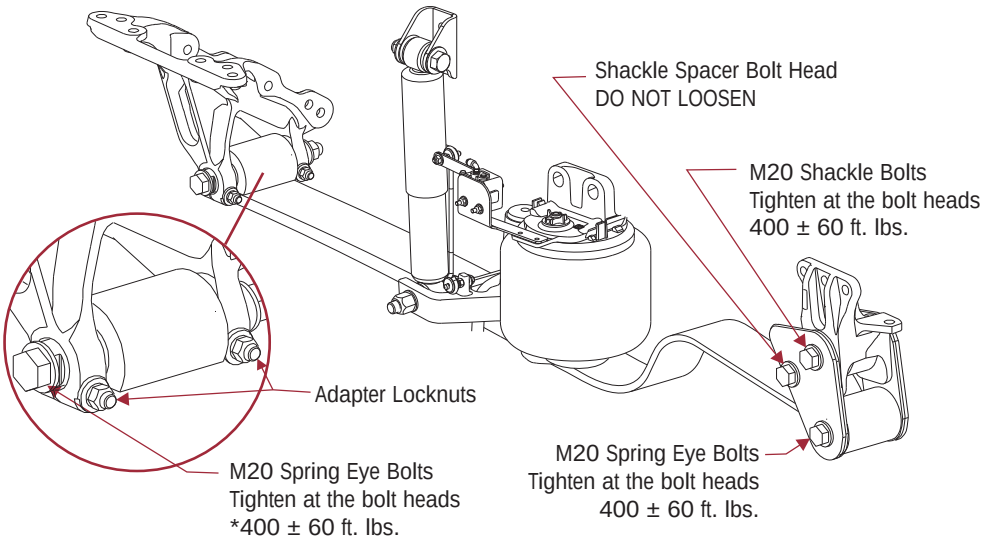

* Specifications provided, controlled and subject to change by vehicle manufacturer.

FRONT AND REAR LEAF SPRING EYE BUSHINGS

The leaf spring eye bushings for the AIRTEK leaf spring are designed for extended service life. In the event of premature/excessive wear or damage to the bushings, careful consideration must be given to the contributing factors. Such factors must be corrected in order to help prevent the new bushings from sustaining similar premature/excessive wear or damage in the same manner. The front and rear bushings are not replaceable items. Therefore in the event of premature/excessive wear or damage, Hendrickson requires that the front leaf spring assembly be replaced.

SHOCK ABSORBER

NOTE It is not necessary to replace the shock absorber in pairs if only one shock requires replacement.

DISASSEMBLY

1. Remove the upper and lower mounting fasteners per the vehicle manufacturer's specifications.
2. Slide out the shock absorber, see Figure 9-15.
3. Inspect the shock absorber mounting brackets and hardware for damage or wear, replace as necessary.

FIGURE 9-15

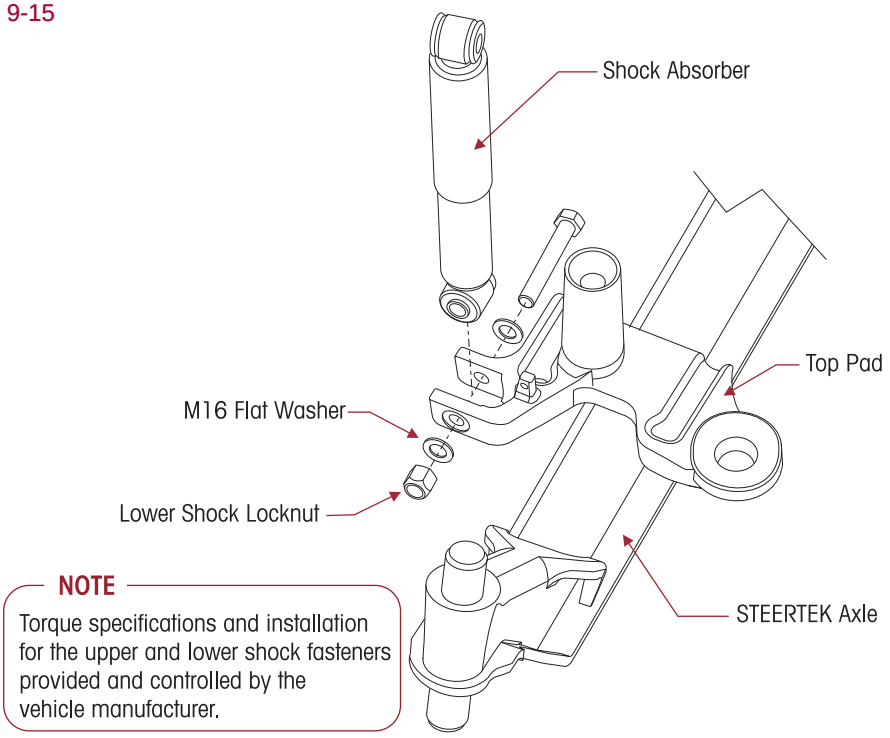

ASSEMBLY

1. Install the shock absorber into the upper and lower mounting brackets.
2. Install the upper and lower shock mounting fasteners per the vehicle manufacturer's specifications.
3. Tighten the upper and lower shock fasteners to the vehicle manufacturer's torque specifications.

BOTTOM AXLE WRAP

DISASSEMBLY

1. Chock the wheels.
2. Support the frame with frame stands.

WARNING

PRIOR TO AND DURING DEFLATION AND INFLATION OF THE FRONT AIR SUSPENSION SYSTEM, ENSURE THAT ALL PERSONNEL AND EQUIPMENT ARE CLEAR FROM UNDER THE VEHICLE AND AROUND THE SERVICE AREA, FAILURE TO DO SO CAN CAUSE SERIOUS PERSONAL INJURY, DEATH, OR PROPERTY DAMAGE.

3. See additional Air Spring Cautions and Warnings in the Important Safety Notice Section of this publication prior to deflating or inflating the suspension system.

DANGER

AIR SPRING ASSEMBLIES MUST BE DEFLATED PRIOR TO LOOSENING ANY CLAMP GROUP HARDWARE. UNRESTRICTED AIR SPRING ASSEMBLIES CAN VIOLENTLY SHIFT. DO NOT INFLATE AIR SPRING ASSEMBLIES WHEN THEY ARE UNRESTRICTED. AIR SPRING ASSEMBLIES MUST BE RESTRICTED BY SUSPENSION OR OTHER ADEQUATE STRUCTURE. DO NOT INFLATE BEYOND PRESSURES RECOMMENDED BY AIR SPRING MANUFACTURER, CONTACT HENDRICKSON TECHNICAL SERVICES FOR DETAILS. IMPROPER USE OR OVER INFLATION MAY CAUSE AIR SPRING ASSEMBLIES TO BURST, CAUSING PROPERTY DAMAGE AND/OR SEVERE PERSONAL INJURY.

4.
   - Mack vehicles built with Post '07 Engine are equipped with the vehicle manufacturer's height control valves – exhaust the air from the system per the vehicle manufacturer's guidelines.
   - Mack vehicles built with Pre '07 Engine are equipped with Hendrickson height control valve(s): Remove the air from the air system by disconnecting the height control valve linkage(s) at the rubber grommet(s) and allowing the lever to drop. This will exhaust air from the system.

WARNING

DO NOT USE A CUTTING TORCH TO REMOVE CLAMP GROUP BOLTS OR ATTACHING FASTENERS. THE USE OF SUCH HEAT ON SUSPENSION COMPONENTS CAN ADVERSELY AFFECT THE STRENGTH OF THESE PARTS. A COMPONENT DAMAGED IN THIS MANNER CAN RESULT IN THE LOSS OF VEHICLE CONTROL AND POSSIBLE PERSONAL INJURY OR PROPERTY DAMAGE.

5. Remove the air spring on the side being replaced, see Air Spring Disassembly in this Section.
6. Remove the clamp group M20 U-bolts/hex bolts and locknuts, see Figure 9-16.

FIGURE 9-16 Shown vehicles built with U-bolts • Post '07 Engine

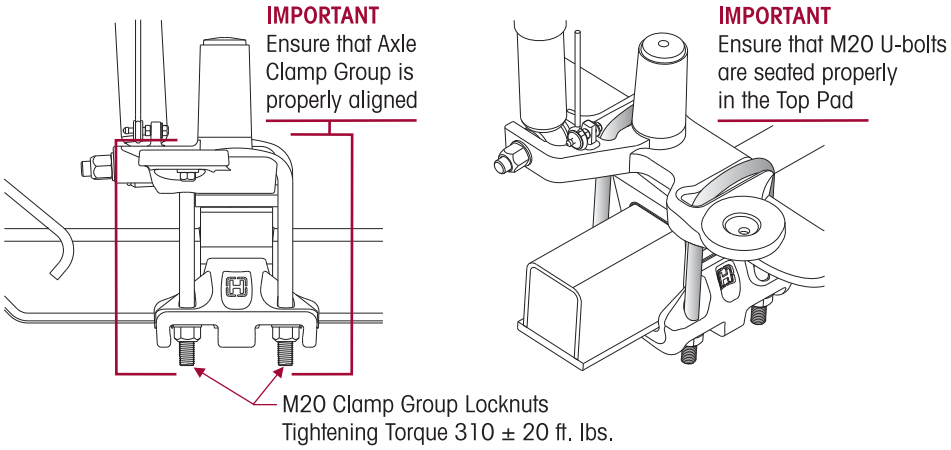

7. Remove the bottom axle wrap. It may be necessary to use a dead blow mallet to dislodge the axle wrap.
8. After removal, inspect the axle wrap for damage. Replace if necessary.
9. Discard the used bottom axle wrap liner.

ASSEMBLY

1. Install the new bottom axle wrap liner onto bottom axle wrap.
2. Install the bottom axle wrap onto the axle.
3. Install new M20 U-bolts/hex bolts (if removed) and locknuts. Ensure that the clamp group is properly aligned and the U-bolts/hex bolts are seated in the top pad, and the bottom axle wrap is centered on the top axle wrap, see Figure 9-16.

NOTE — The clamp group U-bolt locknuts and hex bolt locknuts have the same torque value.

FIGURE 9-17

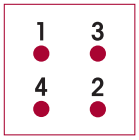

4. Tighten the clamp group locknuts evenly in 50 foot pounds increments to 310 ± 20 foot pounds (420 ± 27 Nm) torque in the proper pattern to achieve uniform bolt tension, see Figure 9-17.
5. Install the air spring (if removed), see Air Spring Assembly in this section.
6. Remove the frame stands.
7. Remove the wheel chocks.

TOP AXLE WRAP (in chassis)

DISASSEMBLY

1. Chock the wheels.
2. Support the frame with frame stands.

WARNING PRIOR TO AND DURING DEFLATION AND INFLATION OF THE FRONT AIR SUSPENSION SYSTEM, ENSURE THAT ALL PERSONNEL AND EQUIPMENT ARE CLEAR FROM UNDER THE VEHICLE AND AROUND THE SERVICE AREA, FAILURE TO DO SO CAN CAUSE SERIOUS PERSONAL INJURY, DEATH, OR PROPERTY DAMAGE.

3. See additional Air Spring Cautions and Warnings in the Important Safety Notice Section of this publication prior to deflating or inflating the suspension system.

DANGER AIR SPRING ASSEMBLIES MUST BE DEFLATED PRIOR TO LOOSENING ANY CLAMP GROUP HARDWARE. UNRESTRICTED AIR SPRING ASSEMBLIES CAN VIOLENTLY SHIFT. DO NOT INFLATE AIR SPRING ASSEMBLIES WHEN THEY ARE UNRESTRICTED. AIR SPRING ASSEMBLIES MUST BE RESTRICTED BY SUSPENSION OR OTHER ADEQUATE STRUCTURE. DO NOT INFLATE BEYOND PRESSURES RECOMMENDED BY AIR SPRING MANUFACTURER, CONTACT HENDRICKSON TECHNICAL SERVICES FOR DETAILS. IMPROPER USE OR OVER INFLATION MAY CAUSE AIR SPRING ASSEMBLIES TO BURST, CAUSING PROPERTY DAMAGE AND/OR SEVERE PERSONAL INJURY.

4. - Mack vehicles built with Post '07 Engine are equipped with the vehicle manufacturer's height control valves – exhaust the air from the system per the vehicle manufacturer's guidelines.
   - Mack vehicles built with Pre '07 Engine are equipped with Hendrickson height control valve(s): Remove the air from the air system by disconnecting the height control valve linkage(s) at the rubber grommet(s) and allowing the lever to drop. This will exhaust air from the system.
5. Disconnect the air lines at the air springs.
6. Raise the vehicle and suspend the front axle to remove the load from the leaf spring.
7. Support the frame with frame stands.
8. Remove the air spring, see Air Spring Disassembly in this section.
9. Remove the front spring eyebolts and loosen shackle assembly fasteners. Remove the rear spring eyebolts.

SERVICE HINT — A bottle jack may be required to raise the axle slightly in order to remove spring eye bolt.

10. Support the axle with a jack.

WARNING

DO NOT USE A CUTTING TORCH TO REMOVE CLAMP GROUP BOLTS OR ATTACHING FASTENERS. THE USE OF SUCH HEAT ON SUSPENSION COMPONENTS CAN ADVERSELY AFFECT THE STRENGTH OF THESE PARTS. A COMPONENT DAMAGED IN THIS MANNER CAN RESULT IN THE LOSS OF VEHICLE CONTROL AND POSSIBLE PERSONAL INJURY OR PROPERTY DAMAGE.

11. Remove the M20 clamp group U-bolts/hex bolts and fasteners.

FIGURE 9-18

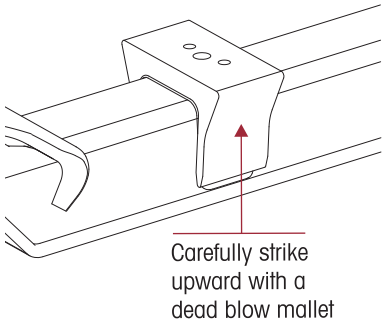

12. Remove the top pad, Z spacer (if equipped), the galvanized liner, and the bottom axle wrap.
13. Remove the lower shock mounting bolt.
14. Remove the spring assembly.
15. Strike the axle wrap with a dead blow mallet at the front and rear on the underside of the axle wrap to dislodge it from the axle, see Figure 9-18.
16. Clean and inspect the axle wrap and axle for cracks or damage, replace each if cracks or damage are present.

FIGURE 9-19

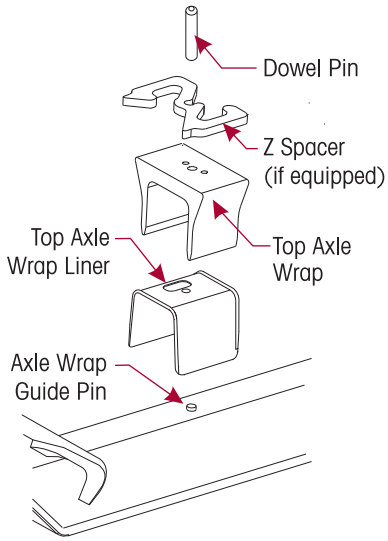

ASSEMBLY

1. Install the new axle wrap liner on the axle.
2. Spray the axle wrap liner and the axle wrap with a silicon lubricant.
3. Position the axle wrap on the axle, see Figure 9-19.
4. Protect the top surface of the axle wrap with a block of wood, cardboard, or shop towels.

CAUTION

DO NOT STRIKE THE TOP AXLE WRAP WITH A HAMMER. HENDRICKSON RECOMMENDS USING A PLASTIC DEAD BLOW MALLET WITH CARE WHEN INSTALLING THE AXLE WRAP.

5. Using a dead blow mallet, drive the axle wrap onto the axle indexing the axle guide pin until the axle wrap is firmly seated on the axle.
6. Install the dowel pin into the axle wrap and Z spacer (if equipped).
7. Install the leaf spring on the axle wrap indexing the dowel pin.
8. Install the galvanized liner and the top pad on the leaf spring.
9. Remove and replace with a new bottom axle wrap liner.
10. Install the bottom axle wrap.
11. Install the new M20 clamp group bolts, washers, and the new locknuts.
12. Snug the clamp group, DO NOT torque at this time.
13. Use a jack and raise the axle and leaf spring assembly into the front spring hanger and shackle bracket.

SERVICE HINT

A bottle jack may be required to raise the axle slightly in order to install the spring eyebolts.

14. Install the M20 x 230 mm hex bolt in the front spring hanger.
15. Install the M20 x 160 mm hex bolt in the shackle bracket.

16. Ensure that the clamp group is properly aligned, the U-bolts/hex bolts are seated in the top pad, and the bottom axle wrap is centered on the top axle wrap, see Figure 9-20.

NOTE

The clamp group U-bolt locknuts and hex bolt locknuts have the same torque value.

FIGURE 9-20 Shown vehicles built with U-bolts • Post '07 Engine

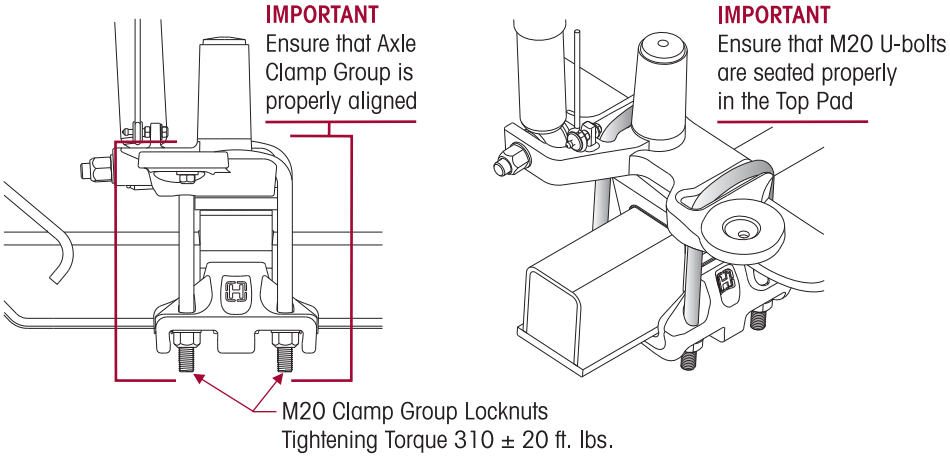

FIGURE 9-21

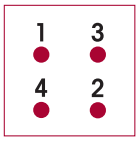

17. Tighten the clamp group locknuts evenly in 50 foot pounds increments to 310 ± 20 foot pounds (420 ± 27 Nm) torque in the proper pattern to achieve uniform bolt tension, see Figure 9-21.
18. Install the lower shock fasteners, see Figure 9-22.
19. Tighten the fasteners to vehicle manufacturer's torque specifications.
20. Remove the frame stands.
21. Remove the jack from the axle.
22. Attach air lines to the air springs.
23. Install the height control valve linkage and inflate the suspension to normal operating pressure.
24. Air up system to proper ride height, see Ride Height Adjustment in Alignment & Adjustments Section of this publication.
25. Tighten the front M20 spring eye bolt head to 400 ± 60 foot pounds (542 ± 81 Nm) torque.
26. Tighten the rear M20 shackle assembly bolt heads to 400 ± 60 foot pounds (542 ± 81 Nm) torque.
27. Tighten the adapter bolts in the front hanger to the vehicle manufacturer's specifications.
28. Remove the wheel chocks.

FRONT AXLE ASSEMBLY

The axle clamp group consist of the following components:

- Top Axle Wrap
- Top Axle Wrap Liner
- Top Pad
- Bottom Axle Wrap
- Bottom Axle Wrap Liner
- M20 Bolts, Washers and Locknuts

FIGURE 9-22 Shown vehicles built with U-bolts • Post '07 Engine

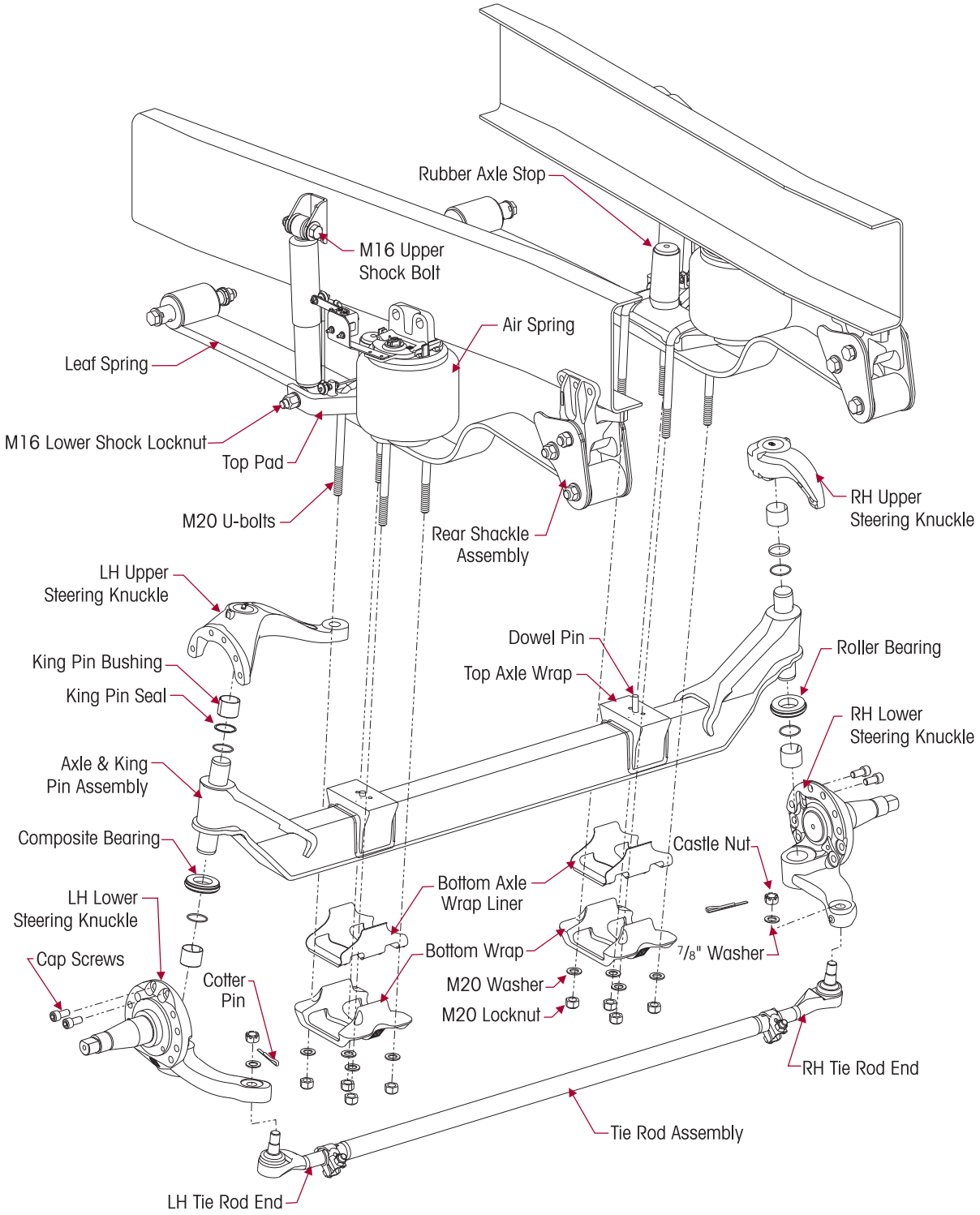

STEERTEK AXLE REMOVAL

AXLE DISASSEMBLY

Refer to Figure 9-22 when replacing the components of the STEERTEK axle as shown.

WARNING

DO NOT USE A TORCH ON CLAMP GROUP BOLTS OR ANY OTHER PART OF THE AIRTEK SUSPENSION. IF THE CLAMP GROUP BOLTS WILL NOT COME LOOSE WITH AN IMPACT WRENCH, USE A CUT OFF WHEEL AND CUT THE SHANK OF THE BOLT. THE USE OF A TORCH CAN CAUSE DAMAGE TO CERTAIN AIRTEK COMPONENTS THAT CAN RESULT IN THE LOSS OF VEHICLE CONTROL AND POSSIBLE PERSONAL INJURY OR PROPERTY DAMAGE.

1. Place the vehicle on level floor.
2. Chock the wheels.

WARNING

PRIOR TO AND DURING DEFLATION AND INFLATION OF THE FRONT AIR SUSPENSION SYSTEM, ENSURE THAT ALL PERSONNEL AND EQUIPMENT ARE CLEAR FROM UNDER THE VEHICLE AND AROUND THE SERVICE AREA, FAILURE TO DO SO CAN CAUSE SERIOUS PERSONAL INJURY, DEATH, OR PROPERTY DAMAGE.

3. See additional Air Spring Cautions and Warnings in the Important Safety Notice Section of this publication prior to deflating or inflating the suspension system.

DANGER

AIR SPRING ASSEMBLIES MUST BE DEFLATED PRIOR TO LOOSENING ANY CLAMP GROUP HARDWARE. UNRESTRICTED AIR SPRING ASSEMBLIES CAN VIOLENTLY SHIFT. DO NOT INFLATE AIR SPRING ASSEMBLIES WHEN THEY ARE UNRESTRICTED. AIR SPRING ASSEMBLIES MUST BE RESTRICTED BY SUSPENSION OR OTHER ADEQUATE STRUCTURE. DO NOT INFLATE BEYOND PRESSURES RECOMMENDED BY AIR SPRING MANUFACTURER, CONTACT HENDRICKSON TECHNICAL SERVICES FOR DETAILS. IMPROPER USE OR OVER INFLATION MAY CAUSE AIR SPRING ASSEMBLIES TO BURST, CAUSING PROPERTY DAMAGE AND/OR SEVERE PERSONAL INJURY.

4. Deflate the air springs.
   - Mack vehicles built with Post '07 Engine are equipped with the vehicle manufacturer's height control valves – exhaust the air from the system per the vehicle manufacturer's guidelines.
   - Mack vehicles built with Pre '07 Engine are equipped with Hendrickson height control valve(s): Remove the air from the air system by disconnecting the height control valve linkage(s) at the rubber grommet(s) and allowing the lever to drop. This will exhaust air from the system.
5. Raise the vehicle.
6. Support the vehicle with frame stands.
7. Suspend the front axle with the shocks attached.
8. Remove the front wheels, hubs, brake shoes, ABS sensors and backing plate assembly.
9. Disconnect the drag link from the steering arm.

CAUTION

IF THE AIR SPRING IS TO BE RE-INSTALLED; CARE MUST BE TAKEN TO REMOVE DIRT AND DEBRIS FROM THE PUSH–TO–CONNECT FITTING. FAILURE TO DO SO COULD RESULT IN THE PUSH–TO–CONNECT FITTING FAILING TO SEAL WITH THE AIR LINE. INSPECT LOCK-TABS FOR DAMAGE OR CRACKS PRIOR TO RE-INSTALLATION.

10. Unseat both of the air springs at the axle top pad.
11. Support the axle with a floor jack.

WARNING

THE REPAIR OR RECONDITIONING OF SUSPENSION OR AXLE COMPONENTS IS NOT ALLOWED. ANY SUSPENSION OR AXLE COMPONENTS FOUND TO BE DAMAGED OR OUT OF SPECIFICATIONS MUST BE REPLACED. ALL MAJOR HENDRICKSON COMPONENTS ARE HEAT TREATED AND TEMPERED. AIRTEK COMPONENTS CANNOT BE BENT, WELDED, HEATED, OR REPAIRED WITHOUT REDUCING THE STRENGTH OR LIFE OF THE COMPONENT. FAILURE TO FOLLOW THESE GUIDELINES CAN CAUSE LOSS OF VEHICLE CONTROL, POSSIBLE PERSONAL INJURY, DEATH, OR PROPERTY DAMAGE AND WILL VOID APPLICABLE WARRANTIES.

12. Disconnect and remove the lower shock mounting bolts.
13. Remove the M20 clamp group bolts and fasteners.
13. Lower the axle and remove from the vehicle.

STEERTEK AXLE (Removed from Chassis)

CLAMP GROUP DISASSEMBLY

FIGURE 9-23

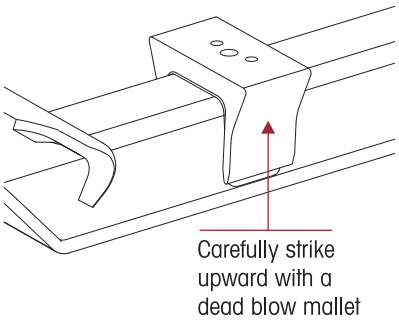

1. Remove the bottom axle wrap and liner from the axle.
2. Strike the top axle wrap with a dead blow mallet at the front and rear on the underside of the axle wrap to dislodge it from the axle, see Figure 9-23.
3. After removal of the top axle wrap from the axle inspect for cracks or fretting.
4. Remove the tie rod assembly. See Tie Rod Disassembly in this section.

WARNING

REMOVAL OF THE CAP SCREWS WILL ALLOW THE STEERING KNUCKLE TO SEPARATE FROM THE AXLE. THE STEERING KNUCKLE MUST BE SUPPORTED BEFORE REMOVAL OF THESE TWO (2) CAP SCREWS. FAILURE TO DO SO CAN CAUSE COMPONENT DAMAGE OR PERSONAL INJURY.

FIGURE 9-24

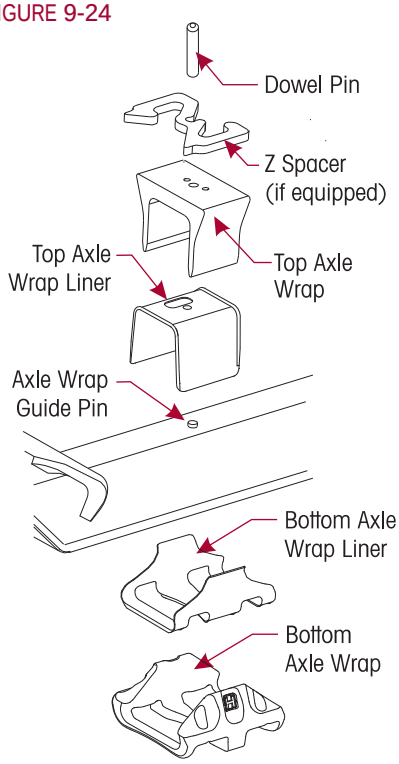

5. Remove the two 5/8" socket head cap screws from the steering knuckle assembly.
6. Remove the steering knuckle, thrust bearing, and shim pack if equipped.
7. After complete removal of the one side, repeat Steps 1-6 for the opposite side of the axle.
8. Inspect the steering kingpin bushings for excessive wear. If worn, replace the kingpin bushings and seals. Refer to the Kingpin Bushing replacement instructions in this section.

CLAMP GROUP ASSEMBLY

1. Install the new upper axle wrap liner on the axle. Index the liner with the axle's guide dowel pin, see Figure 9-24.

CAUTION

DO NOT STRIKE THE TOP AXLE WRAP WITH A HAMMER. DAMAGE TO THE ALUMINUM AXLE WRAP WILL OCCUR. USA A PLASTIC DEAD BLOW MALLET WITH CARE WHEN INSTALLING THE AXLE WRAP.

WARNING SECURELY INSTALL THE TOP WRAP TO THE AXLE. FAILURE TO DO SO CAN CAUSE LOSS OF CONTROL OF THE VEHICLE, PERSONAL INJURY OR PROPERTY DAMAGE.

SERVICE HINT Apply a lubricant (such as an aerosol silicone) to the outer surface of the plastic liner to aid in assembly of the top axle wrap.

2. Install the top axle wrap, the axle wrap must be aligned with the guide pin on the axle.
3. IMPORTANT: Install the dowel pin and spacer(s), if equipped, into the top axle wrap, see Figure 9-24.
4. At this point in the assembly DO NOT install anything further on the axle.

AXLE INSTALLATION

1. Place the new axle on the floor jack and position the axle under the vehicle.
2. Raise the axle into position; see Figure 9-25. Care must be taken at this point to ensure that the dowel pins align correctly with the front leaf springs.
3. Install the galvanized liner between the main spring and the top pad, see Figure 9-25. The top pad is installed with the air spring bores positioned outboard.

FIGURE 9-25

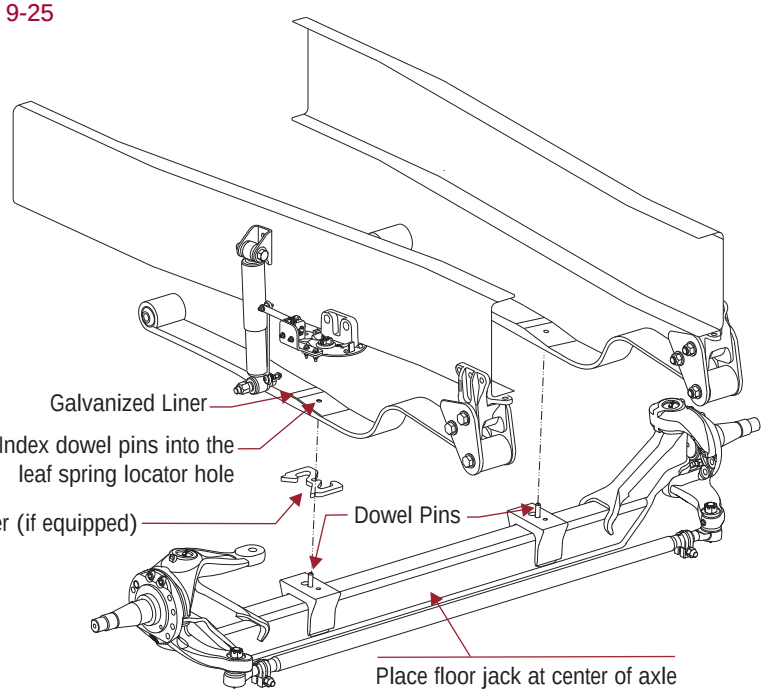

4. Install the new bottom axle wrap liner (and Z spacer, if equipped), on the bottom axle wrap.
5. Install the bottom axle wrap on the axle.
6. Install the new M20 clamp group U-bolts/Hex bolts and the new M20 locknuts. Snug the bolts, DO NOT tighten to torque at this time.
7. Install the M16 lower shock mounting bolts, washers and locknuts and tighten to vehicle manufacturer's torque specifications.
8. Ensure that the clamp group is properly aligned and the U-bolts/hex bolts are seated in the top pad, and the bottom axle wrap is centered on the top axle wrap, see Figure 9-26.

NOTE The clamp group U-bolt locknuts and hex bolt locknuts have the same torque value.

FIGURE 9-26 Shown vehicles built with U-bolts • Post '07 Engine

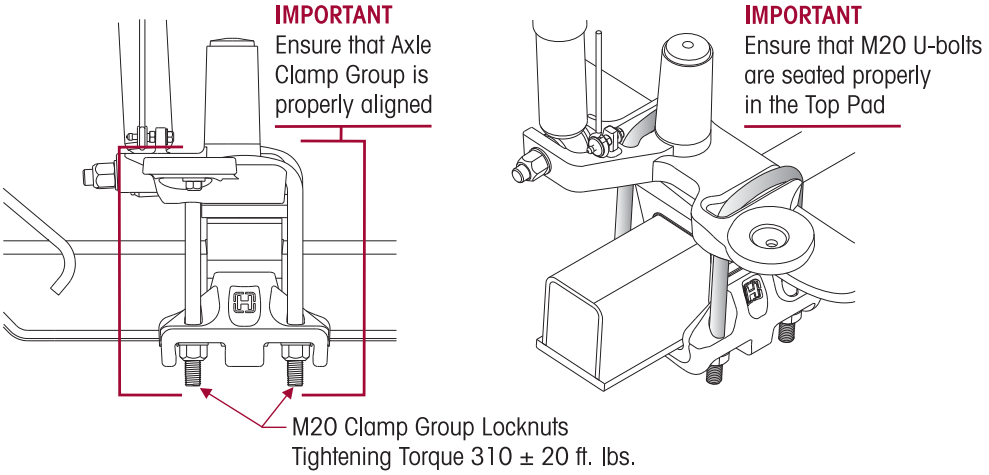

FIGURE 9-27

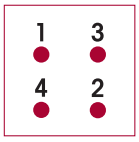

9. Tighten the clamp group locknuts evenly in 50 foot pounds increments to 310 ± 20 foot pounds (420 ± 27 Nm) torque in the proper pattern to achieve uniform bolt tension, see Figure 9-27.
10. Install the steering knuckles. Refer to the Steering Knuckle Assembly instructions in this section.
11. Install the tie rod assembly.
12. Install the 7/8" hardened washers on the lower steering knuckle arm and the castle nuts. Tighten the castle nuts to 185 foot pounds (251 Nm), then rotate until the first castle slot lines up with the cotter pin bore in the tie rod end. DO NOT back off nut for cotter pin installation.
13. Install the cotter pins.
14. Connect the drag link. Install the castle nut. Tighten the castle nut to 185 foot pounds (251 Nm), then rotate until the first castle slot lines up with the cotter pin bore in the drag link. DO NOT back off nut for cotter pin installation.
15. Install cotter pin.
16. Install the brake spider assemblies.
17. Install the brakes, hubs, and wheels as per manufacturer's guidelines.
18. Fill the hubs with the proper lube, see the vehicle manufacturer's guidelines for recommended lubrication, if required.
19. Grease the front steering components; refer to the lubrication guidelines in the Preventive Maintenance Section of this publication.
20. Remove safety stands.
21. See additional Air Spring Cautions and Warnings in the Important Safety Notice Section of this publication prior to deflating or inflating the air system.
22. Reconnect the height control valve linkage and air up the system.
23. Check the ride height, adjust as necessary. Refer to the Alignment & Adjustments Section of this publication.
24. Remove the wheel chocks.

STEERING KNUCKLE DISASSEMBLY

See tools needed to remove and install kingpin bushing under the Special Tools Section of this publication. The steering knuckle disassembly and assembly includes the preparation and replacement process of the kingpin bushings.

DISASSEMBLY

1. Place the vehicle on level floor.
2. Chock the wheels.
3. Raise the frame.
4. Support the vehicle with frame stands.
5. Remove the wheel and hub assembly.
6. Remove the brake components from the steering knuckle.
7. Remove the tie rod assembly.

FIGURE 9-28

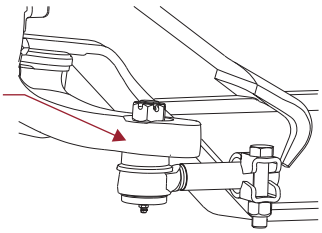

SERVICE HINT

Lightly tap the side of the lower knuckle assembly arm with a mallet to separate the tie rod end from the knuckle assembly arm, see Figure 9-28.

8. Remove the drag link from the knuckle.

WARNING

REMOVAL OF THE CAP SCREWS WILL ALLOW THE LOWER STEERING KNUCKLE TO SEPARATE FROM THE AXLE. THE LOWER STEERING KNUCKLE MUST BE SUPPORTED BEFORE REMOVAL OF THESE TWO (2) CAP SCREWS. FAILURE TO DO SO CAN CAUSE COMPONENT DAMAGE OR PERSONAL INJURY.

9. Support the lower steering knuckle.

FIGURE 9-29

10. Remove the 2 socket head cap screws that connect upper steering knuckle to the lower steering knuckle, see Figure 9-29.

SERVICE HINT

Remove the grease zerks from the knuckle assemblies. This will allow the knuckle assemblies to freely slide up and down the kingpins without creating back pressure.

11. Remove the lower steering knuckle from the kingpin by sliding it down the kingpin.
12. Remove the upper steering knuckle by sliding it up off the kingpin.

KINGPIN MEASUREMENT AND PREPARATION

CLEANING THE GROUND OR POLISHED PARTS

- Use a cleaning solvent to clean ground or polished parts and surfaces. DO NOT USE GASOLINE.
- DO NOT clean ground or polished parts in a hot solution tank or with water, steam, or alkaline solutions. These solutions will cause corrosion of the parts.

CLEANING THE ROUGH PARTS

- Rough parts can be cleaned with the ground or polished parts. Rough parts can also be cleaned in hot solution tanks with a weak alkaline solution. The parts must remain in the hot solution tanks until they are completely cleaned and heated.

DRYING THE CLEANED PARTS

- Parts must be dried immediately after cleaning. Dry the parts with clean paper towels, clean rags, or compressed air. DO NOT dry bearings by spinning with compressed air. Damage to the bearings will result.

PREVENTING CORROSION ON CLEANED PARTS

- Apply a light coating of oil to all cleaned and dried parts that are going to be reused. DO NOT apply oil to the brake lining or the brake drums. If parts are to be stored, apply an effective rust inhibitor to all surfaces.

WARNING

TO HELP PREVENT SERIOUS EYE INJURY, ALWAYS WEAR PROPER EYE PROTECTION WHEN YOU PERFORM VEHICLE MAINTENANCE OR SERVICE.

WARNING

SOLVENT CLEANERS CAN BE FLAMMABLE, POISONOUS AND CAUSE BURNS. TO HELP AVOID SERIOUS PERSONAL INJURY, CAREFULLY FOLLOW THE MANUFACTURER'S PRODUCT INSTRUCTIONS AND GUIDELINES AND THE FOLLOWING PROCEDURES:

1. WEAR PROPER EYE PROTECTION.
2. WEAR CLOTHING THAT PROTECTS YOUR SKIN.
3. WORK IN A WELL VENTILATED AREA.
4. DO NOT USE GASOLINE, SOLVENTS OR OTHER MATERIALS THAT CONTAIN GASOLINE THAN CAN EXPLODE.
5. HOT SOLUTION TANKS OR ALKALINE SOLUTIONS MUST BE USED CORRECTLY. FOLLOW THE MANUFACTURER'S RECOMMENDED INSTRUCTIONS AND GUIDELINES CAREFULLY TO HELP PREVENT PERSONAL ACCIDENT OR INJURY.

CAUTION

DO NOT USE HOT SOLUTION TANKS OR WATER AND ALKALINE SOLUTIONS TO CLEAN GROUND OR POLISHED PARTS. DAMAGE TO THE PARTS WILL RESULT.

WARNING

THE STEERTEK HAS A UNIQUE AXLE. THE KINGPIN IS CRYOGENICALLY INSTALLED IN THE AXLE. THE KINGPIN IS A NON-REPLACEABLE COMPONENT OF THE AXLE ASSEMBLY. DO NOT TRY TO REMOVE THE KINGPIN. IF THE KINGPIN SHOWS SIGNS OF MOVEMENT, CONTACT HENDRICKSON SALES – TECH SERVICES.

1. Prepare and polish the kingpin by removing all grease and excess debris using a fine grit (220 grit or higher) emery cloth and parts solvent, see Figures 9-30 through 9-33.

FIGURE 9-30

FIGURE 9-31

FIGURE 9-32 Kingpin Before Cleaning

FIGURE 9-33 Kingpin After Cleaning

2. Inspect the kingpin for wear or damage. Use a micrometer and measure the upper and lower kingpin in two locations. Positions must be 90º opposed from each other. If the kingpin has less than 1.802" diameter, replacement of the axle is necessary, see Figures 9-34 through 9-37.

   Kingpin minimum dimension is 1.802"

FIGURE 9-34

FIGURE 9-35

FIGURE 9-36

FIGURE 9-37

KINGPIN BUSHING REMOVAL

1. Remove the retaining ring from the grease cap.
2. A hydraulic shop press with a minimum forcing capacity of 2.5 tons (minimum press capacity of 5,000 psi or use an arbor press) will be required.

WARNING

BEFORE APPLYING HYDRAULIC PRESSURE TO ANY TOOLING SET-UP, ALWAYS CHECK TO BE SURE THE PRESS PLATE, ADAPTERS, AND COMPONENTS BEING WORKED ON ARE POSITIONED PROPERLY, I.E. “IN LINE” WITH THE RAM. IMPROPER POSITIONING CAN CAUSE PERSONAL INJURY OR COMPONENT DAMAGE.

CAUTION

BEFORE APPLYING HYDRAULIC PRESSURE TO REMOVE OR INSTALL THE KINGPIN BUSHING, SUPPORT THE STEERING KNUCKLE AS SHOWN IN FIGURES 9-39 AND 9-40. IMPROPER SUPPORT TO THE STEERING KNUCKLES CAN CAUSE COMPONENT DAMAGE.

3. Use the grease cap to press out the kingpin bushing and seal. Remove the grease zerk in the grease cap or use a hollow driver, see Figure 9-38, to press out the kingpin bushing.
4. Install the lower steering knuckle upside down in press. Be sure to support the lower steering knuckle assembly so that it sits in-line with the press, see Figure 9-39.
5. Use the same procedure to remove the kingpin bushing in the upper steering knuckle, see Figures 9-40 and 9-41.
6. Clean the parts and then inspect for reassembly, see Figure 9-41.

FIGURE 9-38

FIGURE 9-39

FIGURE 9-40

FIGURE 9-41

STEERING KNUCKLE BORE MEASUREMENT

Complete the following steering knuckle bore inspection and the measurement instructions prior to installing the kingpin bushing.

1. Measure the upper knuckle bore inside diameter at two locations. Always use an inside micrometer or a telescoping gauge when taking a knuckle bore measurement. Some out-of-roundness at the top and bottom of the bore edges is acceptable. Steering knuckle bore diameter is 1.938" ± 0.003".
2. Measure the upper and lower bore in two positions and at two locations. The two positions must be 90º opposed from each other, see Figures 9-42 and 9-43. If the average measurement is more than the knuckle bore maximum diameter specification, replace the steering knuckle.

FIGURE 9-42

FIGURE 9-43

FIGURE 9-44

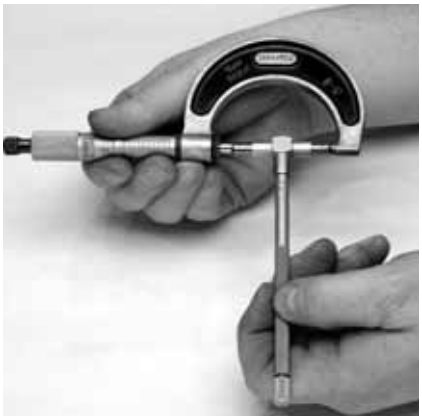

KINGPIN BUSHING INSTALLATION

1. A hydraulic shop press with a minimum forcing capacity of 5 tons will be required.

WARNING

BEFORE APPLYING HYDRAULIC PRESSURE TO ANY TOOLING SET-UP, ALWAYS CHECK TO BE SURE THE PRESS PLATE, ADAPTERS, AND COMPONENTS BEING WORKED ON ARE POSITIONED PROPERLY, I.E. “IN LINE” WITH THE RAM. IMPROPER POSITIONING CAN CAUSE PERSONAL INJURY OR COMPONENT DAMAGE.

2. Install the lower or upper steering knuckle in the press.
3. Install the kingpin bushing from the machined side (axle side) of the lower steering knuckle using a bushing driver, see driver specifications in the Special Tools Section of this publication. Press in bushing to a depth of no less than 15⁄64" (0.236") or 6 millimeters and no more than 5⁄16" (0.32") or 8 millimeters, see Figures 9-45 through 9-47.
4. After this procedure is complete, it is necessary to ream the kingpin bushings to fit the kingpins, refer to Kingpin Bushing Reaming instructions in this section.

FIGURE 9-45

FIGURE 9-46

FIGURE 9-47

KINGPIN BUSHING REAMING

CAUTION

REAM THE KINGPIN BUSHINGS WITH AN ADJUSTABLE STRAIGHT FLUTE REAMER. DO NOT HONE OR BURNISH THE KINGPIN BUSHINGS. HONING OR BURNISHING WILL DAMAGE THE BUSHINGS AND VOID WARRANTY.

WARNING

WHEN INSTALLING STEERING KNUCKLE COMPONENTS IN A VISE IT IS NECESSARY TO PROTECT THE MACHINED SURFACES FROM GOUGES OR MARRING BY USING BRASS JAWS. FAILURE TO DO SO CAN CAUSE PREMATURE PART DAMAGE, DAMAGE TO THE STEERING KNUCKLE COMPONENTS, LOSS OF WARRANTY, LOSS OF VEHICLE CONTROL, CAUSING PERSONAL INJURY OR PROPERTY DAMAGE.

1. Install the lower steering knuckle assembly in a vise with brass jaws.

SERVICE HINT

It is acceptable to mount the knuckle components in a vise either vertically or horizontally when performing the reaming procedure.

2. Install the reamer into the lower steering knuckle until the blades touch the kingpin bushing.
3. Rotate the reamer with light downward pressure. Rotate the reamer smoothly. DO NOT apply too much pressure, see Figures 9-48 and 9-49.
4. Slide the reamer out of the lower steering knuckle. If it is necessary to remove the reamer from the top, rotate the reamer opposite of cutting rotation.
5. Clean and remove all kingpin bushing material from the knuckle assembly. Take special attention to remove material from the grease channels and dimples.
6. Clean the 5/8" brake backing plate bolts with a wire wheel and run a tap through the threads of the upper steering knuckle and then flush out with brake cleaner and dry with compressed air.

FIGURE 9-48

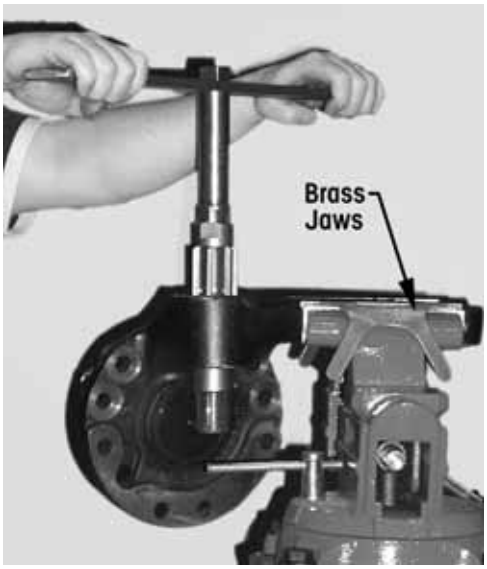

FIGURE 9-49

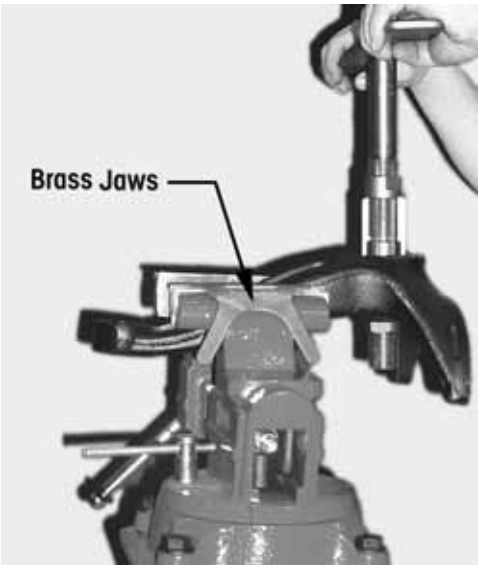

WARNING

PRIOR TO INSTALLATION ENSURE THAT ALL RESIDUAL LOCTITE MATERIAL IS REMOVED FROM THE MOUNTING BOLTS AND THE THREAD BORES IN THE UPPER STEERING KNUCKLE, AND NEW LOCTITE 277 OR EQUIVALENT IS APPLIED TO HELP ENSURE THAT THE BOLTS SUSTAIN THE PROPER TORQUE REQUIREMENT. FAILURE TO DO SO CAN CAUSE LOSS OF VEHICLE CONTROL RESULTING IN PERSONAL INJURY OR PROPERTY DAMAGE.

NOTE

The Hendrickson Genuine part, socket head cap screw comes with a pre-applied loctite compound.

7. Install the lower steering knuckle and the upper steering knuckle on the kingpin.

8. Check for the proper fit by rotating the knuckle assembly back and forth to verify there is no binding on the kingpin, see Figures 9-50 and 9-51.
9. If the bushing is too tight repeat Steps 1 through 8 until the proper clearance is achieved.

NOTE

Bushing size is to be 0.001" larger than the kingpin size.

FIGURE 9-50

FIGURE 9-51

KINGPIN SEAL INSTALLATION

1. Place the lower steering knuckle, or the upper steering knuckle in a vise with brass jaws or place on a suitable workbench. The lower or upper steering knuckle must have the machined surface facing up (axle side up).
2. Lay the kingpin seal into the bore of the lower steering knuckle or upper steering knuckle connection. The seal lip should face outward, or toward the axle.
3. Use a bushing driver tool and press seal firmly into lower or upper steering knuckle connection.
4. Install the kingpin seal until it makes contact with the kingpin bushing, see Figures 9-52 and 9-53.

FIGURE 9-52

FIGURE 9-53

STEERING KNUCKLE ASSEMBLY

ASSEMBLY

After replacement of the kingpin bushings it is necessary to reassemble the steering knuckle assemblies. The STEERTEK axle is equipped with two different thrust bearings installed, see Figures 9-54 and 9-55. The right bearing is a steel roller, and the left bearing is a composite style. Proper placement of the bearings (i.e., right knuckle steel roller, left knuckle composite) is essential for maximum steering performance. DO NOT substitute aftermarket components when servicing.

FIGURE 9-54

FIGURE 9-55

1. Install the thrust bearing on the lower kingpin with the seal facing up toward axle (the black seal will designate the top side). The composite thrust bearing is installed on the left side of the axle. The roller bearing is installed on the right side of the axle, see Figures 9-54 and 9-55.
2. Install the shim on the upper kingpin.
3. Pack the bushing dimples on the upper and lower steering knuckles with multi purpose Lithium based grease (NLGI Grade 2) before installation.
4. Install the upper steering knuckle on the upper arm kingpin.
5. Install the lower steering knuckle on the lower kingpin and install the old socket head cap screws loose into the top two threaded holes.

SERVICE HINT

The easiest way to achieve this is with the grease caps not installed in the knuckle assemblies. This eliminates back pressure. The assembly can then freely slide up and down on the kingpin. If the grease caps are still installed, remove the grease zerks to avoid creating back pressure. Grease zerks will be re-installed at the end of the procedure.

6. Install a bottle jack under the lower knuckle and slightly raise the knuckle until it is possible to thread in the three (3) brake backing plate bolts by hand. These are for guide purposes only.
7. Snug the two socket head cap screws.
8. Lower the bottle jack so that all the vertical end play is on the underside of the axle.
9. Affix a magnetic base dial indicator on the axle and place the tip of the dial indicator on top of the knuckle assembly, see Figure 9-56.

FIGURE 9-56

Checking vertical end play can be performed with the wheel end assembly on.

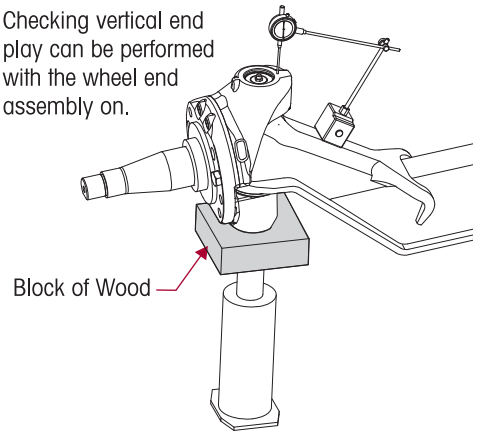

10. Zero the dial indicator.
11. Raise the bottle jack until there is no clearance between the knuckle assembly and the bottom of the axle, slightly lifting the axle.
12. Check the reading on the dial indicator. The specification for vertical end play on the steering knuckle during assembly is 0.008" to 0.011".
13. If the vertical end play is above 0.011", slightly loosen the socket head cap screws. Push down on the upper steering knuckle assembly until the proper vertical end play is achieved. Add (0.005") shim if necessary.
14. If the vertical end play is below the 0.008", loosen the two socket head cap screws. Pull up on the upper steering knuckle assembly until the proper vertical end play is achieved. If the 0.008" minimum vertical end play is unattainable, it may be necessary to remove a 0.005" shim.

NOTE

The Hendrickson Genuine part, socket head cap screw comes with a pre-applied loctite compound.

WARNING

PRIOR TO INSTALLATION ENSURE THAT ALL RESIDUAL LOCTITE MATERIAL IS REMOVED FROM THE MOUNTING BOLTS AND THE THREAD BORES IN THE UPPER STEERING KNUCKLE, AND NEW LOCTITE 277 OR EQUIVALENT IS APPLIED TO HELP ENSURE THAT THE BOLTS SUSTAIN THE PROPER TORQUE REQUIREMENT. FAILURE TO DO SO CAN CAUSE LOSS OF VEHICLE CONTROL RESULTING IN PERSONAL INJURY OR PROPERTY DAMAGE.

15. Remove the old socket head cap screws, one at a time and install the new socket head cap screws and tighten to 190 ± 10 foot pounds (258 ± 14 Nm) torque.
16. Recheck the vertical end play with the dial indicator or a 0.010" feeler gauge, see Figure 9-56.
17. Remove the brake spider bolts, they should thread out freely.
18. Remove the bottle jack and continue assembling the wheel ends.

IMPORTANT NOTE

It is critical to apply Loctite to the three brake spider bolts to ensure that these bolts sustain the proper torque requirement of steering knuckle assembly.

19. Apply loctite to the three brake spider bolts prior to installation into the brake spider. Tighten bolts to 190 ± 10 foot pounds (258 ± 14 Nm) torque.

WARNING

DO NOT GREASE KNUCKLES WITHOUT THE BRAKE SPIDER INSTALLED AND TIGHTENED TO PROPER TORQUE. FAILURE TO DO SO CAN CAUSE COMPONENT DAMAGE RESULTING IN FAILURE AND LOSS OF VEHICLE CONTROL, POSSIBLY CAUSING PERSONAL INJURY OR PROPERTY DAMAGE.

20. Install the tie rod end into the lower steering knuckle arm.
21. Tighten the castle nuts to 185 foot pounds (251 Nm) torque then rotate the castle nut to the next castle slot and install cotter pin.
22. Install the drag link into the steering arm and tighten to vehicle manufacturer's specifications.
23. Install new O-rings on the grease caps and lubricate O-rings with grease.
24. Install grease caps and new retaining rings.
25. Install brakes, drums, wheels, tires and grease steering knuckles with the vehicle on the floor.
26. Remove jack and safety stands.
27. Remove the wheel chocks.

TIE ROD END AND CROSS TUBE

NOTE

Hendrickson supplies different tie rod assemblies and each type may take a different replacement tie rod end kit to service. Prior to ordering find the part number on the tie rod tube, refer to Hendrickson publication no. SEU-0223 or contact Hendrickson Truck Parts for corresponding kit numbers.

FIGURE 9-57

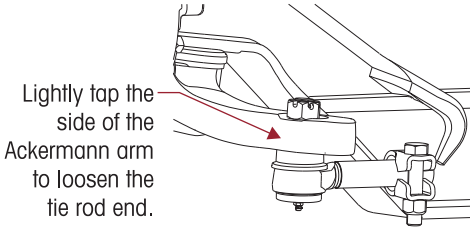

DISASSEMBLY

1. Chock the wheels.
2. Position the steer axle tires straight ahead.
3. Remove the cotter pin and castle nut.
4. Lightly tap the side of the steering knuckle arm to loosen the tie rod end from the Ackermann arm, see Figure 9-57.
5. Repeat to Steps 3 and 4 to remove the other tie rod end.
6. Remove the cross tube and tie rod ends from the vehicle.
7. Mount the cross tube in a soft jaw vice.
8. Remove the hardware from the clamp on the cross tube.
9. Count the exposed threads on the tie rod end being replaced.
10. Remove the tie rod end from the cross tube.

WARNING

DO NOT HEAT THE CROSS TUBE WITH A TORCH TO FACILITATE THE REMOVAL OF THE TIE ROD END. THE USE OF SUCH HEAT CAN ADVERSELY AFFECT THE STRENGTH OF THE CROSS TUBE. A COMPONENT DAMAGED IN THIS MANNER WILL RESULT IN LOSS OF WARRANTY, AND CAN RESULT IN THE AND LOSS OF VEHICLE CONTROL, AND POSSIBLE PERSONAL INJURY OR PROPERTY DAMAGE.

11. If the opposing tie rod end is being replaced repeat Steps 8 through 10.
12. Inspect the cross tube for dents, cracks, or thread damage. Replace the cross tube if needed.

ASSEMBLY

1. Lubricate the new tie rod end threads with Anti-Seize.

NOTE

When installing the cross tube the thread direction of the tie rod ends are as follows:
- A right hand threaded tie rod end will be installed into the right side Ackermann arm.
- A left hand threaded tie rod end will be installed into the left side Ackermann Arm.

2. Install the new tie rod end into the cross tube, leaving the same amount of threads exposed that were counted on the failed tie rod end prior to removal.

WARNING

THE THREADED PORTION OF THE TIE ROD END MUST EXTEND PAST THE SLOTS INTO THE TIE ROD CROSS TUBE, SEE FIGURE 9-58. FAILURE TO DO SO CAN CAUSE COMPONENT DAMAGE, LOSS OF VEHICLE CONTROL AND POSSIBLE PERSONAL INJURY OR PROPERTY DAMAGE.

WARNING

IT IS CRITICAL TO CHECK THE ⅝" TIE ROD CLAMP BOLT HEAD LOCATION TO VERIFY THE CLAMP FASTENERS HAVE SUFFICIENT CLEARANCE AWAY FROM THE LOWER SHOCK MOUNT AT FULL WHEEL CUT. THE FASTENERS MUST NOT CONTACT THE LOWER SHOCK MOUNT. FAILURE TO DO SO CAN CAUSE ONE OR MORE COMPONENTS TO FAIL CAUSING LOSS OF VEHICLE CONTROL AND POSSIBLE PERSONAL INJURY OR PROPERTY DAMAGE.

3. Replace the opposing tie rod end if necessary by repeating Steps 2 and 3.

FIGURE 9-58

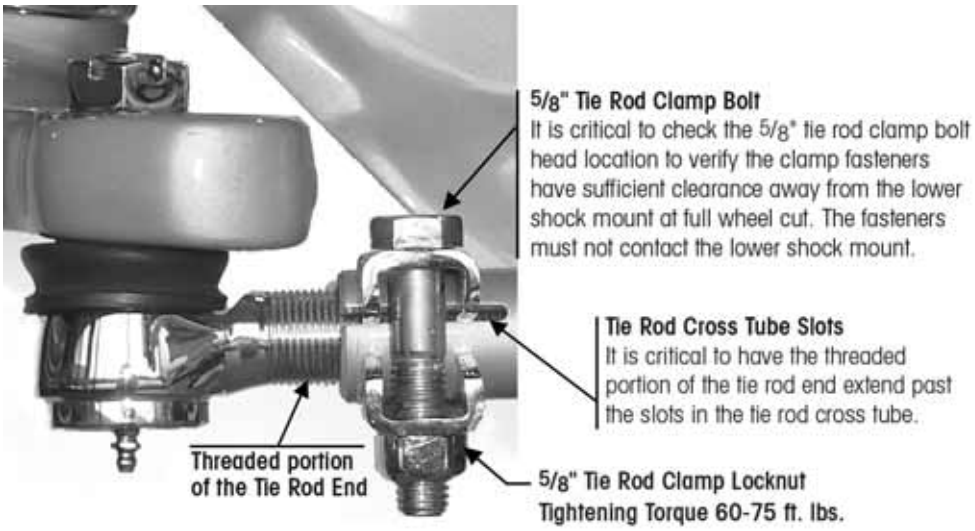

WARNING

DO NOT HEAT THE CROSS TUBE WITH A TORCH TO ROTATE THE CROSS TUBE IN THE TIE ROD END. THE USE OF SUCH HEAT CAN ADVERSELY AFFECT THE STRENGTH OF THE CROSS TUBE. A COMPONENT DAMAGED IN THIS MANNER WILL RESULT IN LOSS OF WARRANTY, AND CAN RESULT IN THE LOSS OF VEHICLE CONTROL, AND POSSIBLE PERSONAL INJURY OR PROPERTY DAMAGE.

4. It is critical that the cross tube rotate in the opposing tie rod end, even if it is not replaced.
5. Install the tie rod end into the lower steering knuckle.
6. Tighten the castle nuts to 185 foot pounds (251 Nm) torque then rotate the castle nut to the next castle slot and install cotter pin.
7. Grease the tie rod ends. Refer to the Lubrication Chart for required lubricant in the Preventive Maintenance Section of this publication.
8. Set the toe, refer to the Toe Adjustment Procedure in the Alignment & Adjustments Section in this publication.

AIRTEK SINGLE TO DUAL HEIGHT CONTROL VALVE CONVERSION

NOTE

The following instructions are for Mack vehicles built prior to March of 2005 not equipped with dual height control valves. As of March 2005 all Mack vehicles equipped with the AIRTEK suspension have been and continue to be equipped with dual height control valves.

Dual Height Control Valve Conversion Kits are available for vehicles built prior to March of 2005 to convert from a single valve to dual height control valves. Service Kit Numbers 60961-101 (12/12.5K capacity) and 60960-102 (13.2K/14.6K capacity), refer to the Parts List Section of this publication for more information.

DISASSEMBLY

1. Place vehicle on level floor.
2. Chock the wheels.

WARNING

PRIOR TO AND DURING DEFLATION AND INFLATION OF THE FRONT AIR SUSPENSION SYSTEM, ENSURE THAT ALL PERSONNEL AND EQUIPMENT ARE CLEAR FROM UNDER THE VEHICLE AND AROUND THE SERVICE AREA, FAILURE TO DO SO CAN CAUSE SERIOUS PERSONAL INJURY, DEATH, OR PROPERTY DAMAGE.

3. See additional Air Spring Cautions and Warnings in the Important Safety Notice Section of this publication prior to deflating or inflating the suspension system.

4. Remove the air from the air system by disconnecting the height control valve linkage at the rubber grommet and allowing the lever to drop. This will exhaust air from the system.

WARNING

IF THE AIR SPRING IS TO BE RE-INSTALLED; INSPECT LOCK-TABS FOR DAMAGE OR CRACKS PRIOR TO RE-INSTALLATION. CARE MUST BE TAKEN TO REMOVE DIRT AND DEBRIS FROM THE PUSH-TO-CONNECT FITTING. FAILURE TO DO SO COULD RESULT IN THE PUSH-TO-CONNECT FITTING FAILING TO SEAL WITH THE AIR LINE.

5. Disconnect the delivery air line from the right air spring.

ASSEMBLY

1. Install the right side height control valve assembly on the right side upper air spring bracket and connect the link to the bracket on the top pad.
2. Inspect the air line removed from the right air spring, trim the end square if necessary. Insert the air line in the supply port of the new height control valve.
3. Install a new air line from the right height control valve delivery port and into the right air spring fitting. Cut the new line to length and ensure that the ends of the line are cut square. Make sure that air lines are fully seated in the fittings.
4. It is important to identify and mark each existing air line prior to removal of the air line for proper installation of the dual height control valves. The air line connections to the proper ports/supply during reassembly are essential to the conversion process.
5. Remove the air lines from the existing left side height control valve.
6. Remove the existing left side height control valve assembly and discard.
7. Install the new left side height control valve assembly on the left side upper air spring mounting bracket and connect the link to the bracket on the top pad.
8. Install a new air line from the left height control valve delivery port and into the left air spring fitting. Cut the new line to length and ensure that the ends of the line are cut square. Make sure that air lines are fully seated in the fittings. It must be determined prior to cutting and installing the air line if the vehicle is equipped with a suspension air pressure gauge. It is required that a T-fitting be installed in the middle of the line to read the suspension air pressure.
9. Acquire access to the air lines inside the left frame rail and connect them. Cut plastic ties as necessary to gain access to the air lines routed inside the frame rail.
10. The supply line from tank will continue to be the supply line for both height control valves. It will be necessary to cut the supply line where it is routed through the left frame rail hole. Install a T-fitting at this location.
11. Cut to length and install an air line from the T-fitting to the left height control valve supply port.
12. Trace the former right air spring delivery line (which is now the right height control valve supply line) and find the T-fitting that has the suspension dash air gauge line installed in it.
13. Remove the dash gauge air line and install it in the T-fitting that was installed in the left air spring delivery line.
14. Remove the T-fitting from the former right air spring delivery line and install a union. Cut a new air line to length from the union to the system air supply T-fitting.
15. Install the air line. Install new plastic lines and secure all air lines inside the left frame rail. This should complete the installation and plumbing of the height control valves. See Dual Height Control Valve in the Plumbing Diagram Section of this publication.
16. Loosen the right side clamp group.
17. Loosen and remove the left clamp group locknuts.

18. Install a jack underneath the left spring in front of the axle. Position the jack far enough away from the axle to allow enough clearance for removal of the 20 or 12 mm spacer, see Figure 9-59.
19. Raise the jack and lift the left leaf spring off the axle seat.

FIGURE 9-59

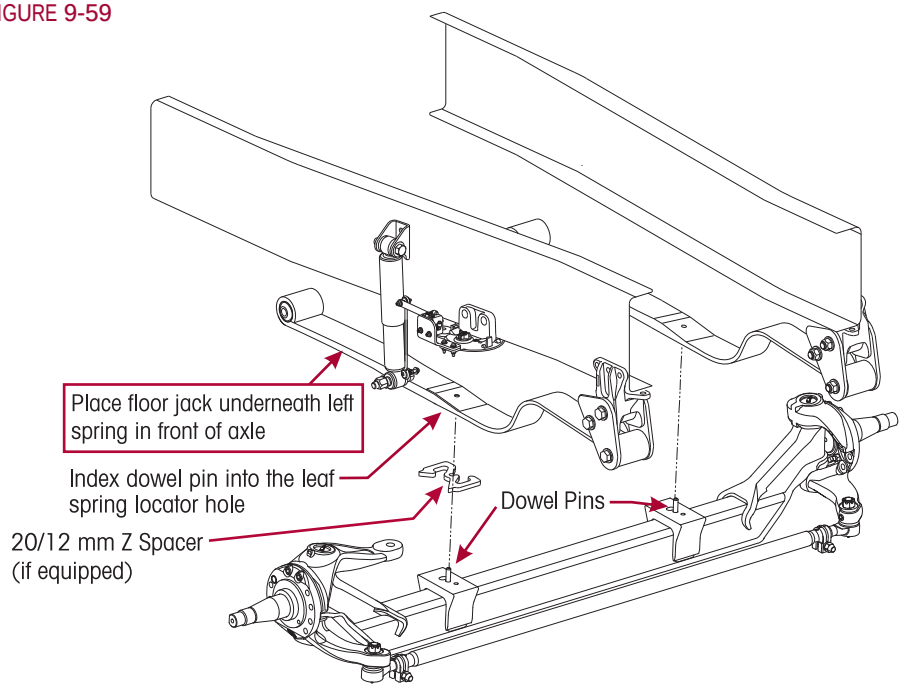

20. Remove and discard 20 or 12 mm spacer.
21. Remove the left dowel pin to shorten the dowel pin to the length of the thickness of the removed spacer (20 or12 mm spacer).
22. Insert the shortened left dowel pin.
23. Ensure that the clamp group is properly aligned and the hex bolts are seated in the top pad, and the bottom axle wrap is centered on the top axle wrap, see Figure 9-60.

FIGURE 9-60 Vehicles built with hex bolts • Pre '07 Engine

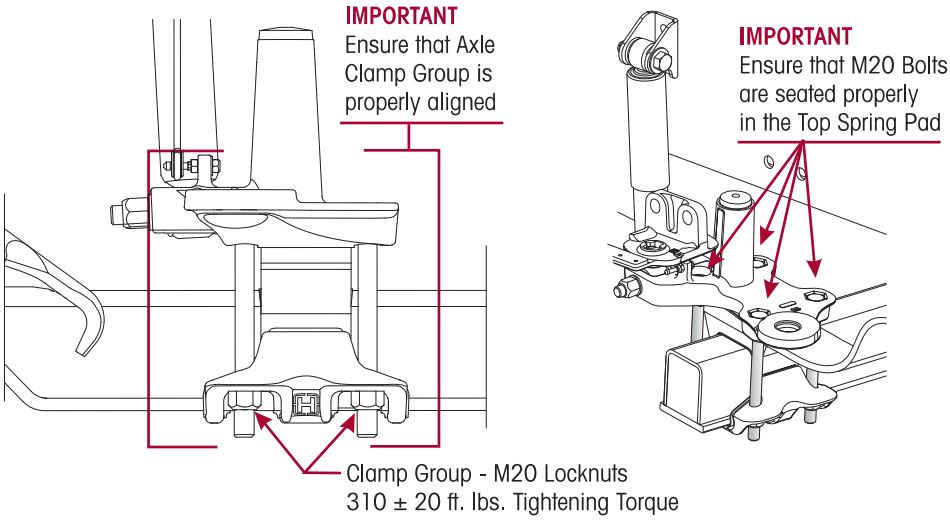

FIGURE 9-61

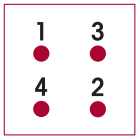

24. Tighten the clamp group locknuts evenly in 50 foot pounds increments to 310 ± 20 foot pounds (420 ± 27 Nm) torque in the proper pattern to achieve uniform bolt tension, see Figure 9-61.
25. Air up system.
26. Install the height control valve linkage(s) and inflate the suspension to normal operating pressure.
27. Remove the wheel chocks.
28. Verify proper ride height. See Alignment and Adjustment Section of this publication.

SECTION 10

AIRTEK Plumbing Diagrams

DUAL HEIGHT CONTROL VALVES PLUMBING DIAGRAM

NOTE

This plumbing diagram is for height control valve supplied by Hendrickson. Contact the vehicle manufacturer for the diagram when a height control valve not supplied by Hendrickson.

NOTE

Prior to March 2005, some Mack vehicle configurations required dual height control valves. As of March 2005 all Mack vehicles equipped with the AIRTEK suspension have been and continue to be equipped with dual height control valves. Hendrickson has Dual Height Control Valve Conversion Kits available to convert from Single Height Control Valve to Dual Height Control Valve. See Parts List Section of this publication.

When replacing or installing nylon air line tubing into quick-connect fittings it is critical that the end of the air line is cut square. Improper cut of the end of the air line tubing can cause the air line to seat improperly in the quick connect fitting causing air leakage.

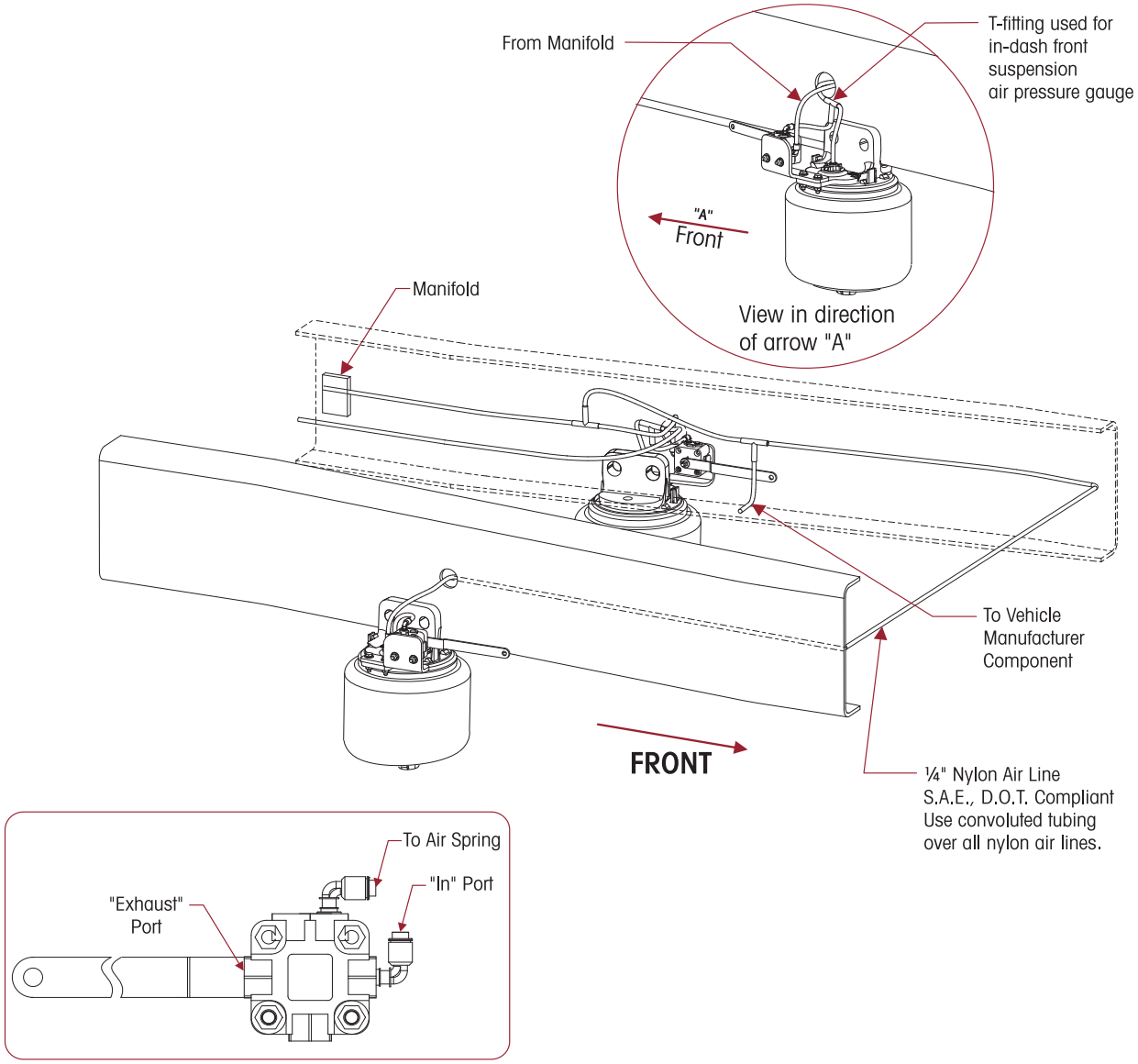

SINGLE HEIGHT CONTROL VALVE PLUMBING DIAGRAM

NOTE

As of March 2005 all Mack vehicles equipped with the AIRTEK suspension have been and continue to be equipped with dual height control valves.

When replacing or installing nylon air line tubing into quick-connect fittings it is critical that the end of the air line is cut square. Improper cut of the end of the air line tubing can cause the air line to seat improperly in the quick connect fitting causing air leakage

.

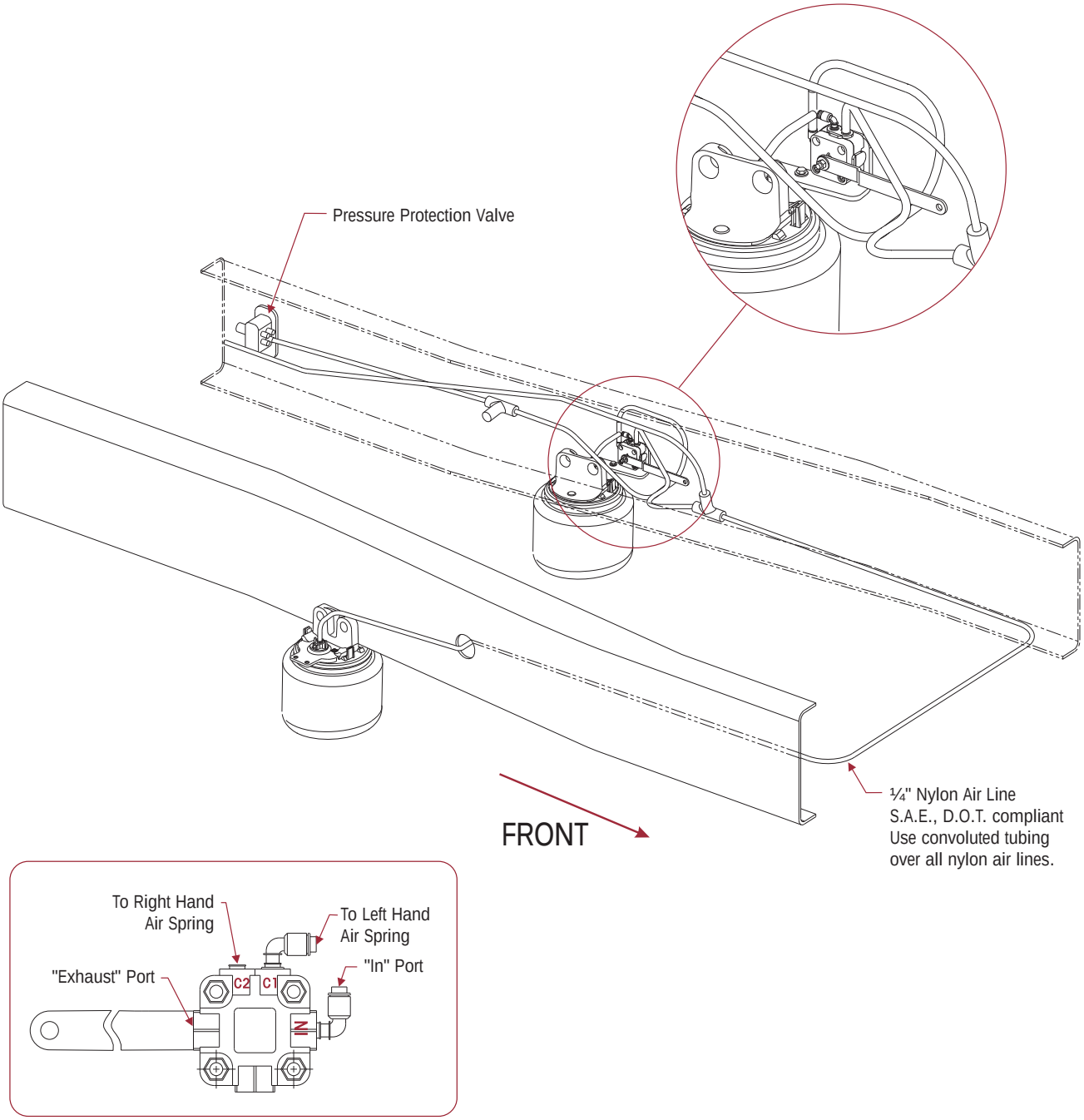

SECTION 11

Troubleshooting Guide

AIRTEK for Mack Vehicles		
TROUBLESHOOTING GUIDE		
CONDITION	POSSIBLE CAUSE	CORRECTION
Worn or damaged kingpins and kingpin bushings.	Dirt in system-contaminated lubricant	Polish and inspect kingpin, replace bushings and seals, then follow specified lubrication procedures
	Incorrect lubricant	Lubricate axle with specified lubricant
	Axle not lubricated at scheduled frequency	Lubricate axle at scheduled frequency
	Incorrect lubrication procedures	Use correct lubrication procedures
	Lubrication interval not compatible with operating conditions	Change lubrication interval to match operating conditions
	Worn or missing seals	Replace worn or missing seals
Vibration or shimmy of front axle during operation	Ride height out of adjustment	Adjust ride height to specification
	Caster is out of adjustment	Adjust caster
	Wheels and/or tires out of balance	Balance or replaces wheels and/or tires
	Engine mount broken	Replace engine mount
	Worn shock absorbers	Replace shock absorbers
	Incorrect wheel bearing adjustment	Adjust wheel bearing to correct specifications
Excessive wear on tires or uneven tire tread wear	Tires have incorrect air pressure	Adjust the pressure to manufacturer's specification
	Tires out of balance	Balance or replace tires
	Incorrect tandem axle alignment	Align tandem axles
	Incorrect toe setting	Adjust toe-in to manufacturer's specification
	Incorrect steering arm geometry	Repair steering system as necessary
	Excessive wheel bearing end play	Check specified wheel nut torque, replace worn or damaged wheel bearings
	Worn kingpin bushings	Replace kingpin bushings
	Incorrect wheel bearing adjustment	Adjust wheel bearing to correct specifications
Vehicle is hard to steer	Low pressure in the power steering system	Repair power steering system
	Steering linkage needs lubrication	Lubricate steering linkage
	Steering knuckles are binding	Replace kingpin bushings. Grease if out of specification or damaged.
	Incorrect steering arm geometry	Repair steering system as necessary
	Thrust bearing will not take grease	Replace thrust bearing
	Caster out of adjustment	Set proper ride height then adjust caster as necessary
	Tie rod ends binding	Replace tie rod ends
	Worn thrust bearing	Replace thrust bearing

AIRTEK for Mack Vehicles

TROUBLESHOOTING GUIDE

CONDITION	POSSIBLE CAUSE	CORRECTION
Tie rod ends are worn and require replacement	Tie rod ends need lubrication	Lubricate tie rod ends. Make sure lubrication schedule is followed.
	Severe operating conditions	Increase frequency of inspection and lubrication intervals
	Damaged boot on tie rod end	Replace tie rod end
Bent or broken cross tube, tie rod end ball stud or tie rod end NOTE: Damaged components require replacement	Pump/gear relief valve pressure setting exceeds system specifications	Adjust power steering system to manufacturer's specified pressure
	Steering gear poppets improperly set or malfunctioning	Check for proper operation or adjust poppets to OEM specifications
	Axle stops improperly set	Set axle stops to OEM specifications
	Severe duty cycle service	Increase frequency of inspection and lubrication intervals
Worn or broken steering ball stud	Drag link fasteners tightened past specified torque	Tighten drag link fasteners to the specified torque
	Lack of lubrication or incorrect lubricant	Lubricate linkage with specified lubricant
	Power steering stops out of adjustment	Adjust steering stops to OEM specifications
Suspension has harsh or bumpy ride	Air spring not inflated	Check air supply to air spring, repair as necessary
	Air spring ride height out of specification	Adjust ride height to proper specification
	Broken or worn leaf spring	Replace leaf spring
	Front suspension overloaded	Redistribute steer axle load
	Suspension is under loaded	Redistribute load to provide more weight on front axle
Restricted steering radius	Steering stops not adjusted correctly	Adjust steering stops to achieve correct wheel cut
Vehicle leans	Ride height incorrect	Adjust ride height to specification
	Air spring(s) are not inflated	Repair source of air pressure loss
	Suspension is not torqued correctly at installation	Perform AIRTEK spring hanger re-torque procedure. See Torque Specification Section of this publication
	Leaf spring broken	Replace leaf spring
	Excessive weight bias	Install Z spacer or, if not equipped with dual height control valves, install with vehicle manufacturer approval
Vehicle wanders	Caster out of adjustment	Set proper ride height, then adjust caster as necessary
	Incorrect toe setting	Adjust toe to specification
	Fifth wheel not greased	Grease fifth wheel
	Air in the power steering system	Remove air from the power steering system
	Rear ride height out of adjustment	Adjust ride height to specification
	Front ride height out of adjustment	Adjust ride height to specification

SECTION 12

Torque Specifications

Hendrickson recommended torque values provided in Foot Pounds and Newton Meter

Mack vehicles built with Post '07 Engine

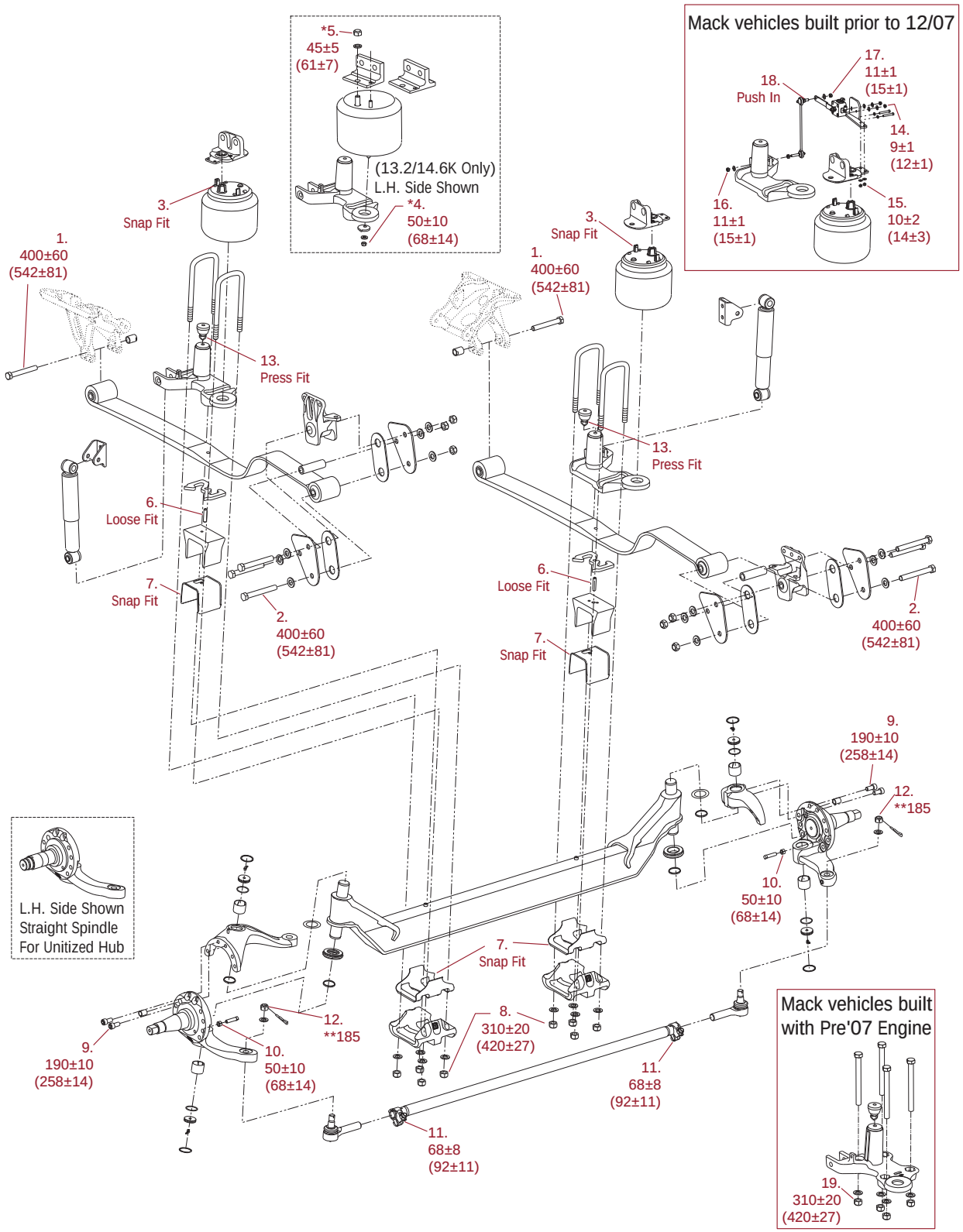

AIRTEK for Mack Vehicles

HENDRICKSON RECOMMENDED TORQUE SPECIFICATIONS

NO.	COMPONENT	QTY.	SIZE	TORQUE VALUE	
				Foot Pounds	Nm
Mack vehicles built with Post '07 Engine					
	Frame Fasteners Furnished & Installed by Vehicle Manufacturer			*	
1	Front Frame Hanger to Front Spring Eye, tighten at the bolt head	2	M20	400 ± 60	542 ± 81
2	Shackle Bracket to Shackle, tighten at the bolt head	6	M20	400 ± 60	542 ± 81
3	Air Spring 12.5K pounds Capacity		Self Locking	Snap Fit	
4	Air Spring 13.2/14.6K pounds Capacity to Top Pad	1	M12	*50 ± 10	*68 ± 14
5	Air Spring 13.2/14.6K pounds Capacity to Height Control Valve Bracket and Air Spring Bracket	2	M20	*45 ± 5	*61 ± 7
6	Spring Center Alignment Dowel Pin	2	½"	Loose Fit	
7	Axle Wrap Liners for Clamp Group		Formed	Snap Fit	
	⚠ WARNING DO NOT ASSEMBLE CLAMP GROUP WITHOUT DELRIN LINERS. FAILURE TO DO SO CAN CAUSE LOSS OF VEHICLE CONTROL, PROPERTY DAMAGE OR PERSONAL INJURY.				
8	Clamp Group Hardware (U-bolt)	4	M20	310 ± 20	420 ± 27
	⚠ WARNING ENSURE CLAMP GROUP IS ALIGNED PROPERLY PRIOR TO TIGHTENING HARDWARE. FAILURE TO DO SO CAN CAUSE LOSS OF VEHICLE CONTROL, PROPERTY DAMAGE OR PERSONAL INJURY.				
9	Knuckle Attachment Bolt (Socket Head Cap Screw)	4	5/8"	190 ± 10	258 ± 14
10	Knuckle/Axle Wheel Stop Bolt	2	½" Jam Nut	50 ± 10	68 ± 14
11	Tie Rod Tube to Tie Rod Ends	2	5/8"	68 ± 8	92 ± 11
12	Tie Rod Ends to Lower Steering Knuckle	2	7/8" Castle Nut	**185	**251
13	Rubber Axle Stop	2	--	Press Fit	
Mack vehicles built with Pre '07 Engine The torque specifications of the Post '07 Engine also apply to the Pre '07 Engine					
14	Dual Height Control Valve to Height Control Valve Bracket	2	M6	9 ± 1	12 ± 1
	Single Height Control Valve to Height Control Valve Bracket	2	¼"	9 ± 1	12 ± 1
15	Height Control Valve Bracket to Upper Air Spring Bracket	2	M6	10 ± 2	14 ± 3
16	HCV Linkage to Top Pad	2	M8	11 ± 1	15 ± 1
17	HCV Linkage to Hight Control Valve	2	M8	11 ± 1	15 ± 1
18	Height Control Valve Leveling Arm to Linkage		Grommet	Push In	
19	Clamp Group Hardware (Hex bolt)	8	M20	310 ± 20	420 ± 27
	⚠ WARNING ENSURE CLAMP GROUP IS ALIGNED PROPERLY PRIOR TO TIGHTENING HARDWARE. FAILURE TO DO SO CAN CAUSE LOSS OF VEHICLE CONTROL, PROPERTY DAMAGE OR PERSONAL INJURY.				

• Frame mount hardware in most cases are Huck style fasteners supplied by the OEM.

NOTES:

* All hardware shown in gray denotes fasteners originally supplied by the vehicle manufacturer. Torque values listed above apply only if Hendrickson supplied fasteners are used. If non-Hendrickson fasteners are used, follow torque specifications listed in vehicle manufacturer's service manual.

** Torque to 185 foot pounds, advance nut to next hex face to install cotter pin. DO NOT back off nut for cotter pin installation.

SECTION 13

Front Wheel Alignment Specifications

AIRTEK for Mack Vehicles

AIRTEK FRONT AIR MODULE SUSPENSION ALIGNMENT SPECIFICATION			
CAMBER[1]	DESIGN SPECIFICATION	RANGE	
		MINIMUM	MAXIMUM
LEFT	0.0° ± 1.0º	-1.0°	+1.0°
RIGHT	-0.25° ± 1.0º	-1.25°	+0.75°
CROSS	+0.25° ± 1.0º	-0.75°	+1.25°

CAMBER NOTES:

[1]The camber angle is not adjustable. DO NOT bend axle or otherwise try to adjust camber. If found out of specification, notify Hendrickson Tech Services for further information.

CASTER[1,2]	DESIGN SPECIFICATION	RANGE	
		MINIMUM	MAXIMUM
LEFT	3.75° ± 1.0º	+2.75°	+4.75°
RIGHT	3.75° ± 1.0º	+2.75°	+4.75°
CROSS[3]	0.0° ± 1.5°	-1.5°	+1.5°

CASTER NOTES:

1. Caster is determined with the vehicle at specified ride height for air suspension or at rated load for mechanical suspension systems. It is critical that the vehicle front and rear ride height is within specifications prior to performing a caster measurement or adjustment. See Hendrickson ride height specifications and procedure.
2. In most cases actual vehicle caster is defined with the frame rails at zero slope. Refer to the vehicle manufacturer's specifications for correct frame rail slope. (Both the alignment surface and the vehicle's frame rails should be level during execution of alignment procedures). For vehicles with a positive frame rake (higher in rear) add the frame slope (in degrees) to the caster reading to determine true vehicle caster.
3. The cross caster angle is not adjustable – DO NOT bend axle or otherwise try to adjust cross caster. If found out of specifications notify Hendrickson Tech Services for further information. Changes to caster can be attained by using caster shims as provided by the vehicle manufacturer or chassis and body manufacturer. Caster shims must match, side to side, to reduce uneven loading to the suspension components. The use of two different angle caster shims will not correct cross caster.
4. Example of caster adjustment: 2.5º RH/3º LH, would require one, 1.0 shim on each side to increase caster and achieve 3.50° RH/4.00° LH, that is in specification. DO NOT attempt to use uneven shims.

Hendrickson recommends following TMC[2] practices:

	DESIGN SPECIFICATION[1]	RANGE	
		MINIMUM	MAXIMUM
TOTAL TOE[2]	1/16" ± 1/32" (0.06" ± 0.03")	1/32" (0.03")	3/32" (0.09")

TOE-IN NOTES:

1. Toe-in is to be set and adjusted in the normal vehicle unladed configuration. Actual vehicle curb weight on the ground. Toe should be checked at the tires front and rear tread center, at a distance above ground equal to the tire's rolling radius.
2. In most instances total toe is set by the vehicle manufacturer or body builder. Consult the vehicle manufacturer for specifications.

SECTION 14

Reference Material

This technical publication covers Hendrickson Truck Suspension System's recommended procedures for our parts/products. Other components play a major role in overall performance and Hendrickson recommends you follow the specific vehicle OEM's recommendation for care and maintenance. Some recommended procedures have been developed by The Technology & Maintenance Council (TMC) and Hendrickson supports these recommendations. We have compiled a list of these below.

TMC

To obtain copies of the following RP's, video's, or charts, contact TMC at:

TMC/ATA
2200 Mill Road
Alexandria, VA 22314

Phone: 703-838-1763
website: tmc.truckline.com
online ordering: www.truckline.com/store

Important References

TMC RP 214B	Tire/Wheel End Balance and Runout
TMC RP 216	Radial Tire Conditions Analysis Guide
TMC RP 219A	Radial Tire Wear Conditions and Causes
TMC RP 222A	User's Guide To Wheels and Rims
TMC RP 230	Tire Test Procedures for Tread wear, Serviceability, and Fuel Economy
TMC RP 514	Pre-Alignment Inspection
TMC RP 618	Wheel Bearing Adjustment Procedure
TMC RP 620B	Front End Alignment Steering Geometry
TMC RP 708A	Trailer Axle Alignment
TMC RP 642	Guidelines For Total Vehicle Alignment
TMC RP 644	Wheel End Conditions Analysis Guide
TMC RP 645	Tie Rod End Inspection and Maintenance Procedure

Video

TMC T0326	Wheel End Maintenance
TMC T0372	Tire Pre-Trip Inspection Guidelines

Other

TMC T0400	Wheel bearing Adjustment Procedure Wall Chart

www.hendrickson-intl.com

HENDRICKSON®

Truck Suspension Systems
800 South Frontage Road
Woodridge, IL 60517-4904 USA

630.910.2800
Fax 630.910.2899

17730-250 Rev B 11-10

Information contained in this literature was accurate at the time of publication. Product changes may have been made after the copyright date that are not reflected.
© 2010 Hendrickson USA, L.L.C. (U.S. Rights) Hendrickson International Corporation (Rights Outside U.S.) All Rights Reserved

Printed in United States of America