AIRTEK®

SOFTEK®

TECHNICAL PROCEDURE

AIRTEK® • SOFTEK® for Blue Bird Buses

SUBJECT: Service Instructions
LIT NO: 17730-248
DATE: August 2011 **REVISION:** E

TABLE OF CONTENTS

Section 1 Introduction . . . 2
Section 2 Product Description . . . 3
Section 3 Important Safety Notice . . . 6
Section 4 Special Tools . . . 11
Section 5 Parts Lists
Blue Bird Vision Buses
AIRTEK – 10K Capacity . . . 12
SOFTEK – 8K/10K Capacity . . . 14
Blue Bird All American Buses
AIRTEK – 14.6K Capacity . . . 16
SOFTEK – 13.2K/14.6K Capacity . . . 18
Right Hand Drive Axle . . . 20
Section 6 Towing Procedure . . . 21
Section 7 Preventive Maintenance
Component Inspection . . . 24
Lubrication Intervals . . . 25
Kingpin Lubrication . . . 25
Tie Rod End Lubrication . . . 26
Tie Rod End Inspection . . . 26
Clamp Group Re-torque Interval . . . 29
Tire Inspection . . . 30
Axle Wrap Liner Inspection . . . 32
Shock Absorber Inspection . . . 32
Kingpin Bushing Inspection . . . 34
Steering Knuckle Inspection . . . 35
Shackle Thrust Washer Inspection . . . 36
Front Hanger/Rear Shackle Plate Surface Paint Wear . . . 37
Section 8 Alignment & Adjustments
Alignment Definitions . . . 38
Inspection Prior to Alignment . . . 40
Front Wheel Alignment . . . 41
AIRTEK Ride Height Adjustment . . . 43
Steering Stop . . . 44
Toe Setting . . . 45
Spring Eye Re-torque . . . 47
Section 9 Component Replacement
Fasteners . . . 49
Spacers . . . 49
AIRTEK 10K Height Control Valve . . . 49
AIRTEK 14.6K Height Control Valve . . . 50
AIRTEK 10K Air Spring . . . 51
AIRTEK 14.6K Air Spring . . . 53
AIRTEK Front Leaf Spring Frame Hanger . . . 55
SOFTEK Front Leaf Spring Frame Hanger . . . 56
AIRTEK Rear Shackle Frame Bracket . . . 57
SOFTEK Rear Shackle Frame Bracket . . . 59
SOFTEK Rubber Axle Stop . . . 60
AIRTEK Thrust Washers . . . 60
SOFTEK Thrust Washers . . . 61
AIRTEK Leaf Spring Assembly . . . 62
SOFTEK Leaf Spring Assembly . . . 64
Front Leaf Spring Eye Bushings . . . 66
AIRTEK/SOFTEK 8K/10K Shock Absorber . . . 66
AIRTEK/SOFTEK 13.2K/14.6K Shock Absorber . . . 67
AIRTEK Bottom Axle Wrap . . . 68
SOFTEK Bottom Axle Wrap . . . 69
AIRTEK Top Axle Wrap (In Chassis) . . . 70
SOFTEK Top Axle Wrap (In Chassis) . . . 73
AIRTEK Front Axle Assembly . . . 75
SOFTEK Front Axle Assembly . . . 76
STEERTEK Axle Removal . . . 77
STEERTEK Axle (Removed from Chassis) . . . 78
Steering Knuckle Disassembly . . . 81
Kingpin Preparation & Measurement . . . 82
Kingpin Bushing Removal . . . 84
Steering Knuckle Bore Measurement . . . 85
Kingpin Bushing Installation . . . 85
Kingpin Bushing Reaming . . . 86
Kingpin Seal Installation . . . 87
Steering Knuckle Assembly . . . 88
Tie Rod End and Cross Tube . . . 90
Section 10 AIRTEK Plumbing Diagrams
10K Capacity . . . 92
14.6K Capacity . . . 93
Section 11 Troubleshooting Guide . . . 94
Section 12 Torque Specifications . . . 96
Section 13 Front Wheel Alignment Specs . . . 104
Section 14 Reference Materials . . . 106

HENDRICKSON
The World Rides On Us®

SECTION 1
Introduction

This publication is intended to acquaint and assist maintenance personnel in the preventive maintenance, service, repair and rebuild of the following Hendrickson equipment as installed on applicable Blue Bird Buses:

- **AIRTEK®** — An integrated front air suspension with the STEERTEK axle.
- **SOFTEK®** — An integrated steel spring mechanical suspension with the STEERTEK axle.
- **STEERTEK** — A durable, lightweight, fabricated steer axle assembly.

NOTE Use only Hendrickson Genuine parts for servicing this suspension system.

It is important to read and understand the entire Technical Procedure publication prior to performing any maintenance, service, repair, or rebuild of the product. The information in this publication contains parts lists, safety information, product specifications, features, proper maintenance, service, repair and rebuild instructions for the AIRTEK/SOFTEK Suspension and the STEERTEK axle.

Hendrickson reserves the right to make changes and improvements to its products and publications at any time. Contact Hendrickson Tech Services for information on the latest version of this manual at 1-866-755-5968 (toll-free U.S. and Canada), 630-910-2800 (outside U.S. and Canada) or e-mail: techservices@hendrickson-intl.com.

The latest revision of this publication is also available online at www.hendrickson-intl.com.

SECTION 2
Product Description

BLUE BIRD VISION BUSES

FIGURE 2-1
AIRTEK® Air Suspension System
Capacity: 10,000 pounds

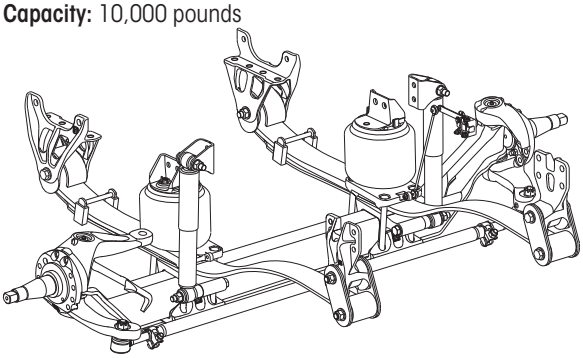

FIGURE 2-2
SOFTEK® Mechanical Suspension System
Capacity: 8,000/10,000 pounds

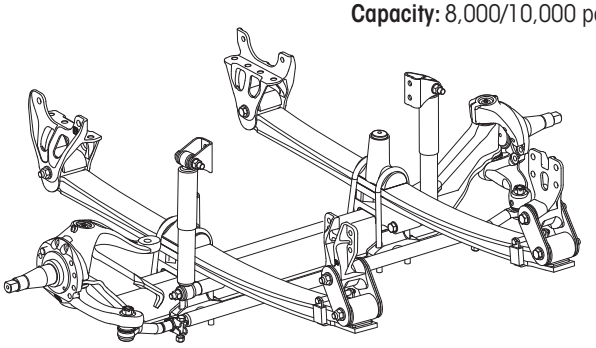

BLUE BIRD ALL AMERICAN BUSES

FIGURE 2-3
AIRTEK® Air Suspension System
Capacity: 14,600 pounds

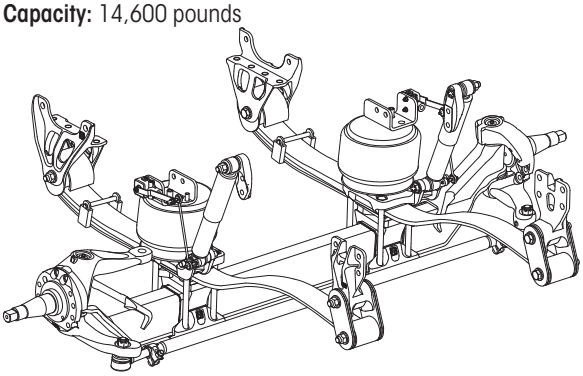

FIGURE 2-4
SOFTEK® Mechanical Suspension System
Capacity: 13,200/14,600 pounds

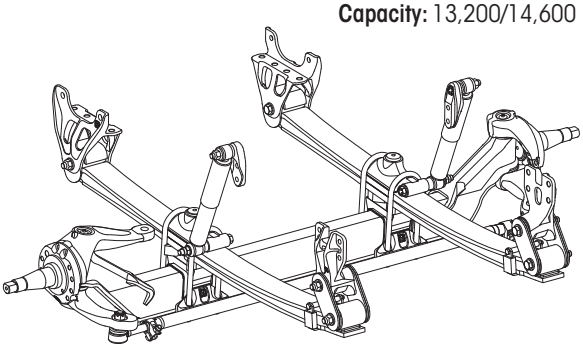

RIGHT HAND DRIVE AXLE

FIGURE 2-5

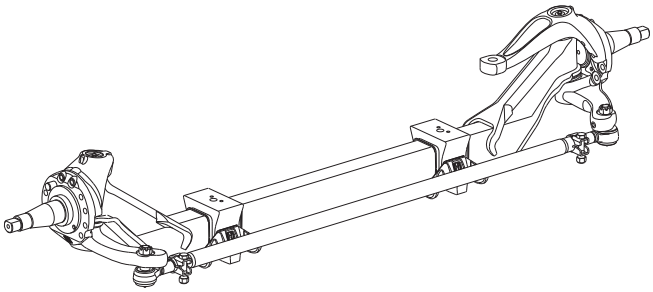

STEERTEK — Integrated into the AIRTEK system, the box-shaped design provides a stiffer axle and resists torsional, longitudinal and vertical loads more effectively than traditional axle beams. Together with the front limbs of the leaf springs, the fabricated axle beam forms a torsion system, enhancing roll stability characteristics and improving handling.

Axle Clamp Group — The axle-friendly clamp group provides four-sided clamping pressure. The Clamp Group consists of the following:

- Top Axle Wrap
- Top Axle Wrap Liner
- Top pad
- Bottom Axle Wrap
- Bottom Axle Wrap Liner
- ¾" Bolts, Washers and Locknuts

Adjustable Tie Rod — To help maximize tire life, the tie rod easily adjusts toe-in/out.

Steering Knuckles — The steering and tie rod arms are integrated for increased strength and reduced weight. The unique steering knuckle packaging delivers a maximum of 50° wheel cut. The two piece knuckle design makes replacing the kingpin bushings easier by eliminating the need to remove the kingpins.

AIRTEK — Winner of the 2001 Automotive News and Cap Gemini Ernst & Young PACE Award for Product Innovation. AIRTEK is an integrated front air suspension and fabricated steer axle that work together to form an integrated torsion system. This lightweight system provides driver comfort and is ideal for a variety of applications. Utilizing a system approach, Hendrickson has engineered and optimized the following components to form a system delivering ride, stability and handling characteristics with reduced weight and maintenance.

Air springs — Exclusive to Hendrickson, the lightweight air springs deliver a soft ride. The air springs are engineered to support 78% of the vertical load while providing a low spring rate. The quick "snap" design for the 10,000 pound capacity, the bolt on design for the 14,600 pound capacity, and the "push-to-connect" air supply design also provide fast and easy removal and installation.

Leaf spring assembly — With its innovative design, the leaf spring provides superior stability, performance and a soft ride. The patented leaf spring shares loads with the air spring. Durable rubber front and patented rear bushings are greaseless and only require periodic inspections.

SOFTEK — is an integrated front mechanical suspension and robotically welded steer axle that work together to form an integrated torsion system. Utilizing a system approach, Hendrickson has engineered and optimized the following components to form a system delivering ride, stability and handling characteristics with reduced weight and maintenance.

Leaf spring assembly — With its innovative design, the leaf spring provides superior stability, performance and a soft ride. Durable rubber front and patented rear bushings are greaseless and only require periodic inspections.

Shock absorbers — AIRTEK/SOFTEK utilizes premium shocks that have been tested and tuned specifically for the suspension system.

Frame brackets — Optimized design delivers weight reduction and proven durability. The front and rear frame brackets are common between the AIRTEK/SOFTEK suspensions.

TECHNICAL NOTES

1. AIRTEK and SOFTEK are approved for 100% on-highway use; other applications must be pre-approved by Hendrickson Sales Engineering. System capacity rating for the suspension represents maximum loads on tires at ground level.
2 The STEERTEK axle for the Vision is available with 69" kingpin intersection (KPI). The STEERTEK axle for the All American is available with 71" kingpin intersection (KPI).
3. AIRTEK suspension weight includes frame and shackle bracket assemblies, main springs, bushings, air springs and air spring bracket, height control system, shocks, upper shock brackets and axle clamp group.
4. SOFTEK suspension weight includes frame and shackle bracket assemblies, steel leaf springs, bushings, shocks, upper shock brackets and axle clamp group.
5. STEERTEK axle weight includes the axle beam, knuckle/steering arm assemblies and tie rod assemblies.
6. AIRTEK and SOFTEK are integral to and available exclusively with the STEERTEK axle. This system is anti-lock braking system (ABS) ready. STEERTEK is compatible with most industry standard wheel ends and brakes. Contact OEM for more information.
7. The STEERTEK axle product identification is etched on the center front of the axle beam providing the following information:
   - Axle part number: Identifies the features of the axle beam.
   - Axle assembly number: Identifies the complete assembly, which includes the steering knuckles and bracket assemblies.

FIGURE 2-6 Front view of STEERTEK axle showing approximate location of product identification.

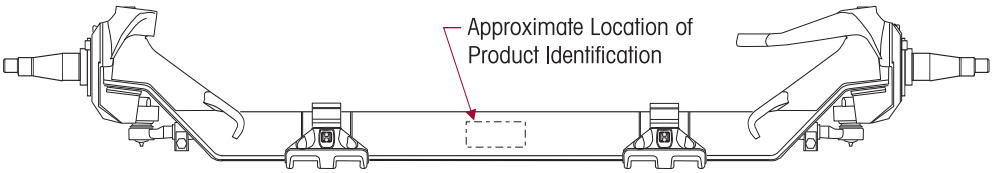

SECTION 3
Important Safety Notice

Proper maintenance, service and repair are important to the reliable operation of the suspension. The procedures recommended by Hendrickson and described in this technical publication are methods of performing such maintenance, service and repair.

The warnings and cautions should be read carefully to help prevent personal injury and to assure that proper methods are used. Improper maintenance, service or repair may damage the vehicle, cause personal injury, render the vehicle unsafe in operation, or void the manufacturer's warranty.

Failure to follow the safety precautions in this manual can result in personal injury and/or property damage. Carefully read and understand all safety related information within this publication, on all decals and in all such materials provided by the vehicle manufacturer before conducting any maintenance, service or repair.

EXPLANATION OF SIGNAL WORDS

Hazard "Signal Words" (Danger-Warning-Caution) appear in various locations throughout this publication. Information accented by one of these signal words must be observed to help minimize the risk of personal injury to service personnel, or possibility of improper service methods which may damage the vehicle or render it unsafe.

This is the safety alert symbol. It is used to alert you to potential personal injury hazards. Obey all safety messages that follow this symbol to avoid possible injury or death.

Additional 'Notes' or 'Service Hints' are utilized to emphasize areas of procedural importance and provide suggestions for ease of repair. The following definitions indicate the use of these signal words as they appear throughout the publication.

DANGER — INDICATES AN IMMINENTLY HAZARDOUS SITUATION WHICH, IF NOT AVOIDED, WILL RESULT IN SERIOUS INJURY OR DEATH.

WARNING — INDICATES A POTENTIAL HAZARDOUS SITUATION WHICH, IF NOT AVOIDED, CAN RESULT IN SERIOUS INJURY OR DEATH.

CAUTION — INDICATES A POTENTIAL HAZARDOUS SITUATION WHICH, IF NOT AVOIDED, MAY RESULT IN MINOR OR MODERATE INJURY, OR PROPERTY DAMAGE.

NOTE — An operating procedure, practice condition, etc. which is essential to emphasize.

SERVICE HINT — A helpful suggestion, which will make the servicing being performed a little easier and/or faster.

Also note that particular service operations may require the use of special tools designed for specific purposes. These special tools can be found in the Special Tools Section of this publication.

The torque symbol alerts you to tighten fasteners to a specified torque value. Refer to Torque Specifications Section of this publication.

SAFETY PRECAUTIONS

WARNING

FASTENERS

DISCARD USED FASTENERS. ALWAYS USE NEW FASTENERS TO COMPLETE A REPAIR. FAILURE TO DO SO COULD RESULT IN FAILURE OF THE PART, OR MATING COMPONENTS, LOSS OF VEHICLE CONTROL, PERSONAL INJURY, OR PROPERTY DAMAGE.

LOOSE OR OVER TORQUED FASTENERS CAN CAUSE COMPONENT DAMAGE, LOSS OF VEHICLE CONTROL, PROPERTY DAMAGE, OR SEVERE PERSONAL INJURY. MAINTAIN CORRECT TORQUE VALUE AT ALL TIMES. CHECK TORQUE VALUES ON A REGULAR BASIS AS SPECIFIED, USING A REGULARLY CALIBRATED TORQUE WRENCH. TORQUE VALUES SPECIFIED IN THIS TECHNICAL PUBLICATION ARE FOR HENDRICKSON SUPPLIED FASTENERS ONLY. IF NON HENDRICKSON FASTENERS ARE USED, FOLLOW TORQUE SPECIFICATION LISTED IN THE VEHICLE MANUFACTURER'S SERVICE MANUAL.

DANGER

AIR SPRINGS

AIR SPRING ASSEMBLIES MUST BE DEFLATED PRIOR TO LOOSENING ANY CLAMP GROUP HARDWARE. UNRESTRICTED AIR SPRING ASSEMBLIES CAN VIOLENTLY SHIFT. DO NOT INFLATE AIR SPRING ASSEMBLIES WHEN THEY ARE UNRESTRICTED. AIR SPRING ASSEMBLIES MUST BE RESTRICTED BY SUSPENSION OR OTHER ADEQUATE STRUCTURE. DO NOT INFLATE BEYOND PRESSURES RECOMMENDED BY AIR SPRING MANUFACTURER, CONTACT HENDRICKSON TECHNICAL SERVICES FOR DETAILS. IMPROPER USE OR OVER INFLATION MAY CAUSE AIR SPRING ASSEMBLIES TO BURST, CAUSING PROPERTY DAMAGE AND/OR SEVERE PERSONAL INJURY.

WARNING

WHEN SERVICING THE VEHICLE OR ATTACHING AN AIR SPRING AND THE VEHICLE IS ON THE GROUND, PRIOR TO AIRING THE SUSPENSION SYSTEM MAKE CERTAIN THE AIR SPRING LOCATOR IS INDEXED INTO THE UPPER AIR SPRING BRACKET PROPERLY, AND THE AIR SPRING IS FULLY SEATED ON THE SPRING TOP PAD. FAILURE TO FOLLOW THESE INSTRUCTIONS CAN RESULT IN PREMATURE AIR SPRING FAILURE, CAUSE PERSONAL INJURY, OR PROPERTY DAMAGE.

WARNING

PRIOR TO AND DURING DEFLATION AND INFLATION OF THE FRONT AIR SUSPENSION SYSTEM, ENSURE THAT ALL PERSONNEL AND EQUIPMENT ARE CLEAR FROM UNDER THE VEHICLE AND AROUND THE SERVICE AREA, FAILURE TO DO SO CAN CAUSE SERIOUS PERSONAL INJURY, DEATH, OR PROPERTY DAMAGE.

WARNING

LOAD CAPACITY

ADHERE TO THE PUBLISHED CAPACITY RATINGS FOR THE SUSPENSIONS. ADD-ON AXLE ATTACHMENTS (I.E. SLIDING FIFTH WHEELS) AND OTHER LOAD TRANSFERRING DEVICES CAN INCREASE THE SUSPENSION LOAD ABOVE THE RATED AND APPROVED CAPACITIES WHICH CAN RESULT IN FAILURE AND LOSS OF VEHICLE CONTROL, POSSIBLY CAUSING PERSONAL INJURY OR PROPERTY DAMAGE.

WARNING

MODIFYING COMPONENTS

DO NOT MODIFY OR REWORK PARTS WITHOUT AUTHORIZATION FROM HENDRICKSON. DO NOT SUBSTITUTE REPLACEMENT COMPONENTS NOT AUTHORIZED BY HENDRICKSON. USE OF MODIFIED, REWORKED, SUBSTITUTE OR REPLACEMENT PARTS NOT AUTHORIZED BY HENDRICKSON MAY NOT MEET HENDRICKSON'S SPECIFICATIONS, AND CAN RESULT IN FAILURE OF THE PART, LOSS OF VEHICLE CONTROL, POSSIBLE PERSONAL INJURY OR PROPERTY DAMAGE, AND WILL VOID WARRANTY. USE ONLY HENDRICKSON AUTHORIZED REPLACEMENT PARTS.

WARNING

PERSONNEL PROTECTIVE EQUIPMENT

ALWAYS WEAR PROPER EYE PROTECTION AND OTHER REQUIRED PERSONAL PROTECTIVE EQUIPMENT TO HELP PREVENT PERSONAL INJURY WHEN YOU PERFORM VEHICLE MAINTENANCE, REPAIR OR SERVICE.

WARNING

SHOCK ABSORBERS

THE SHOCK ABSORBERS ARE THE REBOUND TRAVEL STOPS FOR THE SPRINGS. ANYTIME THE FRONT AXLE ON AN AIRTEK SUSPENSION IS SUSPENDED IT IS MANDATORY THAT THE SHOCK ABSORBERS REMAIN CONNECTED. FAILURE TO DO SO CAN CAUSE THE AIR SPRINGS TO EXCEED THEIR MAXIMUM LENGTH, POSSIBLY CAUSING THE AIR SPRINGS TO SEPARATE FROM THE PISTON, OR CAUSE A REVERSE ARCH IN THE STEEL LEAF SPRINGS, POSSIBLY RESULTING IN PREMATURE STEEL LEAF SPRING FAILURE.

WARNING

TORCH/WELDING

DO NOT USE A CUTTING TORCH TO REMOVE ANY ATTACHING FASTENERS. THE USE OF HEAT ON SUSPENSION COMPONENTS WILL ADVERSELY AFFECT THE STRENGTH OF THESE PARTS. A COMPONENT DAMAGED IN THIS MANNER CAN RESULT IN THE LOSS OF VEHICLE CONTROL AND POSSIBLE PERSONAL INJURY OR PROPERTY DAMAGE.

EXERCISE EXTREME CARE WHEN HANDLING OR PERFORMING MAINTENANCE IN THE AREA OF THE SPRING ASSEMBLY AND AXLE. DO NOT CONNECT ARC WELDING GROUND LINE TO THE SPRING ASSEMBLY OR AXLE. DO NOT STRIKE AN ARC WITH THE ELECTRODE ON THE SPRING ASSEMBLY OR AXLE. DO NOT USE HEAT NEAR THE SPRING ASSEMBLY OR AXLE. DO NOT NICK OR GOUGE THE SPRING ASSEMBLY OR AXLE. SUCH IMPROPER ACTIONS CAN CAUSE DAMAGE TO THE SPRING ASSEMBLY OR THE AXLE CAN FAIL, AND CAN CAUSE LOSS OF VEHICLE CONTROL AND POSSIBLE PERSONAL INJURY OR PROPERTY DAMAGE.

WARNING

OFF ROADWAY TOWING

WHEN A VEHICLE IS DISABLED AND EQUIPPED WITH A STEERTEK AXLE, CARE MUST BE TAKEN TO ENSURE THERE IS NO DAMAGE TO THE SUSPENSION WHEN TOWING THE VEHICLE. THE USE OF A TOW STRAP IS NECESSARY TO TOW A DISABLED VEHICLE INTO A REPAIR FACILITY PARKING LOT INTO THE SHOP BAY. THE TOW STRAPS SHOULD BE CONNECTED TO THE TOW HOOKS PROVIDED BY THE MANUFACTURER AT THE FRONT OF THE BUMPER. IF THE USE OF TOW HOOKS IS NOT AN OPTION THEN A TOW STRAP MAY BE WRAPPED AROUND THE FRONT AXLE (SEE FIGURE 3-1) IN A MANNER THAT IS ACCEPTABLE FOR TOWING THE VEHICLE INTO THE SHOP. DO NOT USE A TOW CHAIN AROUND THE FRONT AXLE OR WITH A SINGLE POINT LOCATION TO TOW THE VEHICLE, DOING SO WILL DAMAGE THE AXLE, SEE FIGURE 3-1. FOR DETAILED TOWING INSTRUCTIONS FOR ON-HIGHWAY TOWING SEE SECTION 6.

FIGURE 3-1

OFF-ROADWAY TOWING

CAUTION

PROCEDURES AND TOOLS

A MECHANIC USING A SERVICE PROCEDURE OR TOOL WHICH HAS NOT BEEN RECOMMENDED BY HENDRICKSON MUST FIRST SATISFY HIMSELF THAT NEITHER HIS SAFETY NOR THE VEHICLE'S SAFETY WILL BE JEOPARDIZED BY THE METHOD OR TOOL SELECTED. INDIVIDUALS DEVIATING IN ANY MANNER FROM THE INSTRUCTIONS PROVIDED ASSUME ALL RISKS OF CONSEQUENTIAL PERSONAL INJURY OR DAMAGE TO EQUIPMENT INVOLVED.

WARNING

SUPPORT THE VEHICLE PRIOR TO SERVICING

PLACE THE VEHICLE ON A LEVEL FLOOR AND CHOCK THE WHEELS TO HELP PREVENT THE VEHICLE FROM MOVING. NEVER WORK UNDER A RAISED VEHICLE SUPPORTED BY ONLY A FLOOR JACK. ALWAYS SUPPORT A RAISED VEHICLE WITH SAFETY STANDS. BLOCK THE WHEELS AND MAKE SURE THE UNIT WILL NOT ROLL BEFORE RELEASING BRAKES. A JACK CAN SLIP OR FALL OVER. SERIOUS PERSONAL INJURY CAN RESULT.

WARNING

AXLE CAMBER

AXLE CAMBER IS NOT ADJUSTABLE. DO NOT CHANGE THE AXLE CAMBER ANGLE OR BEND THE AXLE BEAM. BENDING THE AXLE BEAM (SEE FIGURE 3-3) TO CHANGE THE CAMBER ANGLE WILL DAMAGE THE AXLE AND REDUCE AXLE STRENGTH, AND WILL VOID HENDRICKSON'S WARRANTY. A BENT AXLE BEAM CAN CAUSE LOSS OF VEHICLE CONTROL, POSSIBLY CAUSING PERSONAL INJURY OR PROPERTY DAMAGE.

FIGURE 3-2 REPLACE ANY SAFETY DECALS THAT ARE FADED, TORN, MISSING, ILLEGIBLE, OR OTHERWISE DAMAGED. CONTACT HENDRICKSON TO ORDER REPLACEMENT LABELS.

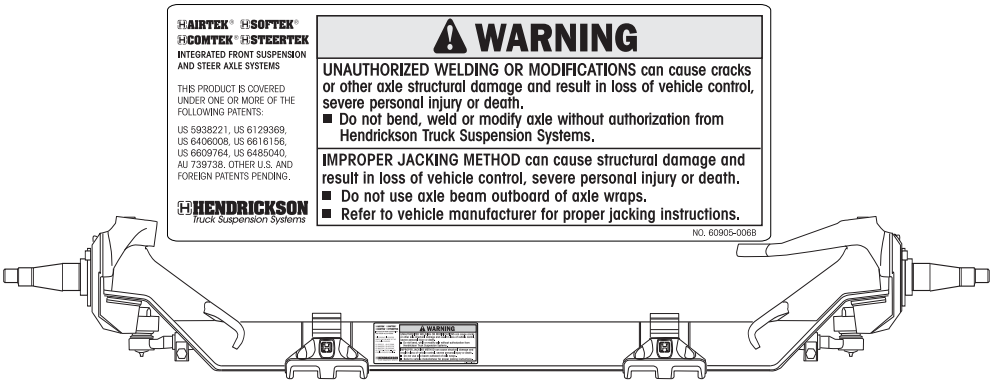

WARNING

AXLE KINGPINS

STEERTEK IS A UNIQUE AXLE, IN THAT THE KINGPIN IS CRYOGENICALLY INSTALLED IN THE AXLE. THE KINGPIN IS A NON-REPLACEABLE COMPONENT OF THE AXLE ASSEMBLY. DO NOT TRY TO REMOVE THE KINGPIN. IF THE KINGPIN SHOWS SIGNS OF MOVEMENT, CONTACT THE HENDRICKSON TECH SERVICES DEPARTMENT.

WARNING

REPAIR AND RECONDITIONING

THE REPAIR OR RECONDITIONING OF SUSPENSION OR AXLE COMPONENTS IS NOT ALLOWED, SEE LABEL IN FIGURE 3-3. ANY AXLE COMPONENTS FOUND TO BE DAMAGED OR OUT OF SPECIFICATIONS MUST BE REPLACED. ALL MAJOR HENDRICKSON COMPONENTS ARE HEAT TREATED AND TEMPERED. AIRTEK COMPONENTS CANNOT BE BENT, WELDED, HEATED, OR REPAIRED WITHOUT REDUCING THE STRENGTH OR LIFE OF THE COMPONENT. FAILURE TO FOLLOW THESE GUIDELINES CAN CAUSE LOSS OF VEHICLE CONTROL, POSSIBLE PERSONAL INJURY, DEATH, OR PROPERTY DAMAGE AND WILL VOID APPLICABLE WARRANTIES.

WARNING

DAMAGED AXLE COMPONENTS

IF A VEHICLE EQUIPPED WITH A STEERTEK AXLE IS INVOLVED IN A CRASH, A THOROUGH INSPECTION OF THE AXLE MUST BE PERFORMED NOTING THE CONDITION OF THE AXLE BEAM, KINGPINS, AND KNUCKLE ASSEMBLIES. IF ANY COMPONENT APPEARS DAMAGED, THE AXLE MUST BE REPLACED. IN THE EVENT THE CRASH RESULTED IN EXCESSIVE SIDE LOAD, SUCH AS A BENT WHEEL, HUB, OR SPINDLE, IT IS STRONGLY RECOMMENDED TO REPLACE THE COMPLETE AXLE ASSEMBLY, CONTACT HENDRICKSON TECHNICAL SERVICES WITH ANY QUESTIONS. FAILURE TO REPLACE ANY DAMAGED COMPONENTS CAN CAUSE LOSS OF VEHICLE CONTROL, POSSIBLE PERSONAL INJURY, DEATH, OR PROPERTY DAMAGE AND WILL VOID APPLICABLE WARRANTIES.

WARNING

PARTS CLEANING

SOLVENT CLEANERS CAN BE FLAMMABLE, POISONOUS AND CAUSE BURNS. TO HELP AVOID SERIOUS PERSONAL INJURY, CAREFULLY FOLLOW THE MANUFACTURER'S PRODUCT INSTRUCTIONS AND GUIDELINES AND THE FOLLOWING PROCEDURE:

1. WEAR PROPER EYE PROTECTION
2. WEAR CLOTHING THAT PROTECTS YOUR SKIN
3. WORK IN A WELL VENTILATED AREA
4. DO NOT USE GASOLINE, OR SOLVENTS THAT CONTAIN GASOLINE. GASOLINE CAN EXPLODE
5. HOT SOLUTION TANKS OR ALKALINE SOLUTIONS MUST BE USED CORRECTLY. FOLLOW THE MANUFACTURER'S RECOMMENDED INSTRUCTIONS AND GUIDELINES CAREFULLY TO HELP PREVENT PERSONAL ACCIDENT OR INJURY

DO NOT USE HOT SOLUTION TANKS OR WATER AND ALKALINE SOLUTIONS TO CLEAN GROUND OR POLISHED PARTS. DOING SO WILL CAUSE DAMAGE TO THE PARTS AND VOID WARRANTY.

SECTION 4
Special Tools

These shop made tools are designed to install and remove kingpin bushings. Bushing tools are made from cold rolled steel or equivalent. Drawings are for reference only. Hendrickson does not supply these tools.

KINGPIN BUSHING TOOLS

Kingpin Bushing Installer

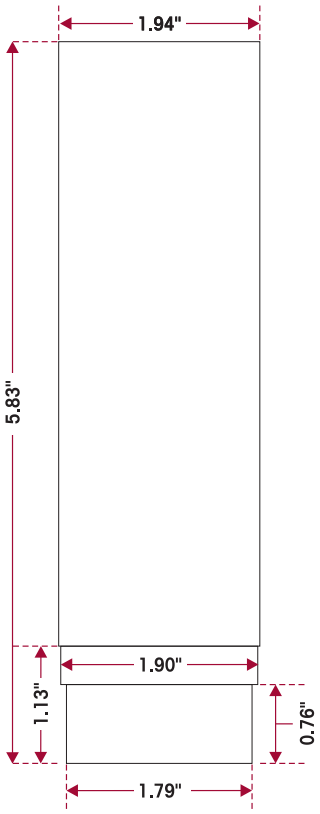

Kingpin Bushing Remover

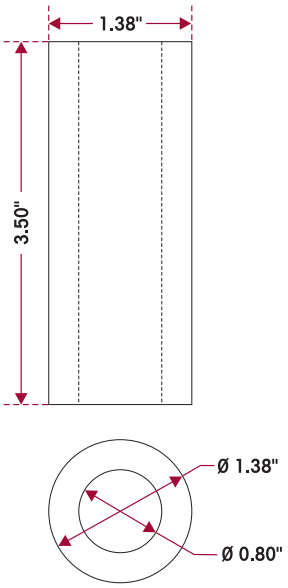

Steering Arm Receiver

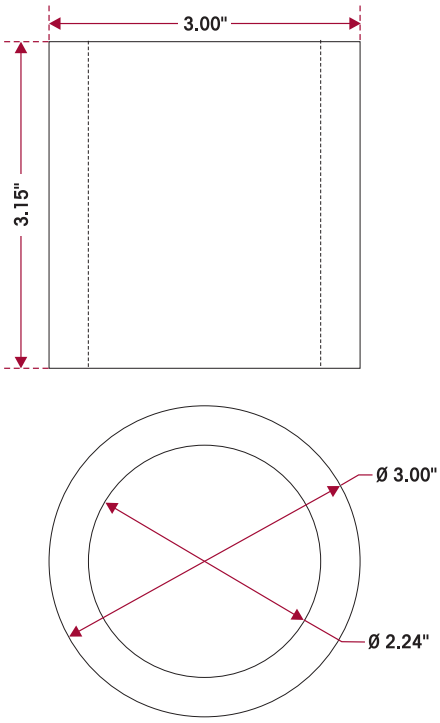

ADJUSTABLE STRAIGHT FLUTE REAMER

Adjustable Straight Flute Reamer

The dimension of cutting diameter must facilitate a range of 1.802" – 1.812"

Parts Lists

AIRTEK for Blue Bird Vision Buses - 10K Capacity

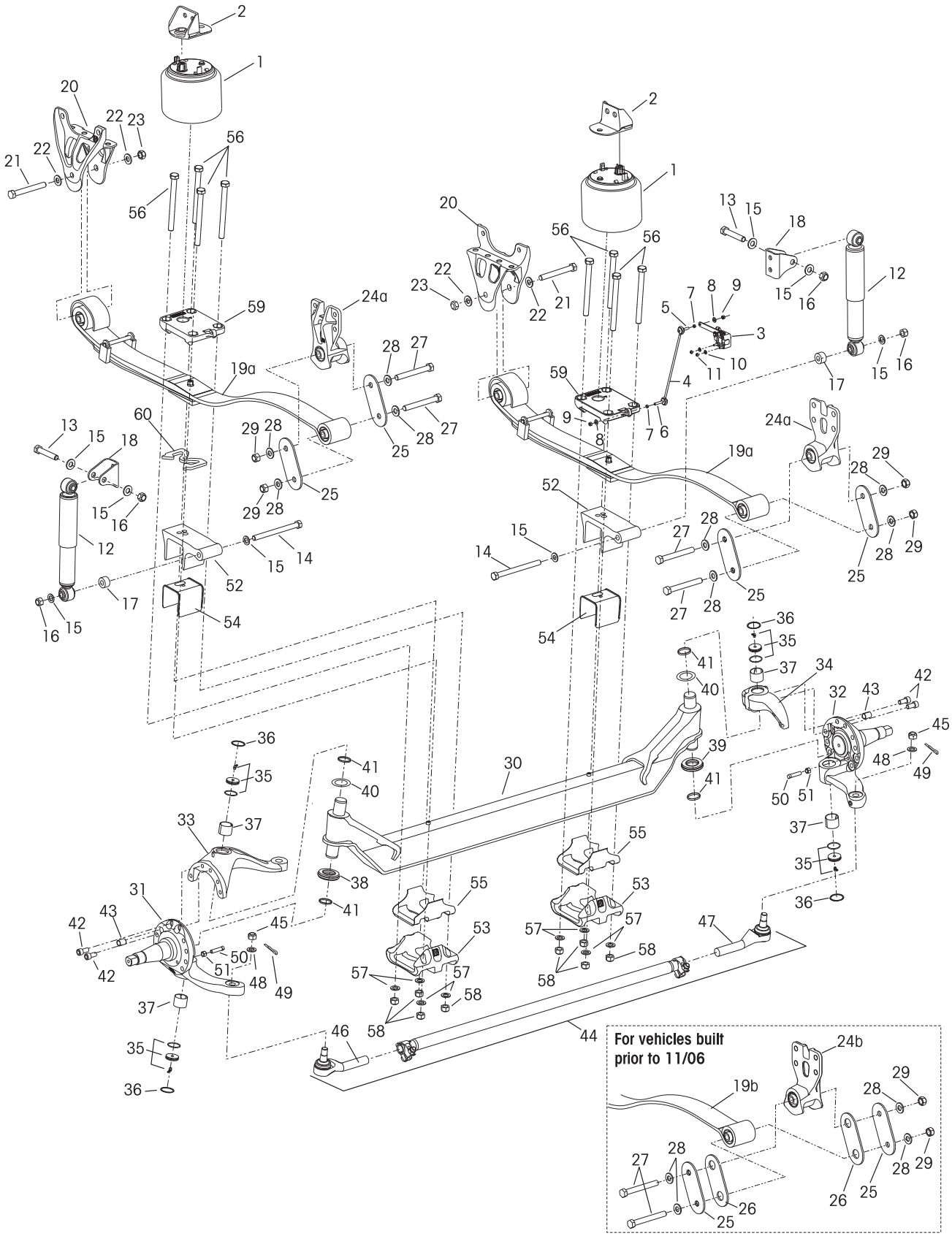

KEY NO.	PART NO.	DESCRIPTION	NO.REQ.
1	64075-002L	Air Spring	2
2	60850-001	Air Spring Bracket	2
	59427-008	HCV, Link Mount & Linkage Assembly Includes Key Nos. 3-11	1
3	59935-004	Height Control Valve	1
4	59428-006	HCV Linkage, *Replaces 59428-001*	1
	64742-001	Link Mount Service Kit, Includes Key Nos. 5-6	
5		*5/16"-18 UNC Stud - 2.07"	1
6		*5/16"-18 UNC Stud - 2.44"	1
7		*5/16"-18 UNC Hex Nut	2
8		*5/16" Hardened Washer	2
9		*5/16"-18 UNC Locknut	2
10		*¼" Hardened Washer	2
11		*¼"-20 UNC Locknut	2
12	58913-009L	Shock Absorber, *Replaces 58913-008*	2
13		**¾"-10 UNC Upper Shock Bolt	2
14		**¾"-10 UNC Lower Shock Bolt	2
15		**¾" Hardened Washer	8
16		**¾"-10 UNC Hex Locknut	4
17	59946-001	Shock Spacer	2
18	59423-002	Shock Bracket	2
	60961-163	**Leaf Spring Assembly Service Kit,** For vehicles built prior to 11/06, Includes Key Nos. 19a, 24a, 25	
		Leaf Spring Assembly	2
19a	66805-001	For vehicles built after 11/06	
19b	60512-000	For vehicles built prior to 11/06	
20	64488-002	Front Hanger, *Replaces 64488-000*	2
21		**M20 Hex Bolt - 170mm	2
22		**M20 Hardened Washer	4
23		**M20 Locknut	2
		Rear Shackle Bracket	2
24a	66510-001	For vehicles built after 11/06	
24b	64316-000	For vehicles built prior to 11/06	
25	64314-000	Rear Shackle Plate	4
26	64159-000	Thrust Washer Only for vehicles built prior to 11/06	4
27		**M20 Hex Bolt - 150mm	4
28		**M20 Hardened Washer	8
29		**M20 Locknut	4
	60952-XXX	Axle Assembly, Includes Key Nos. 30-55 Contact Hendrickson Tech Services for Part No.	1
30	64905-004	Axle & Kingpin Assembly 6.5", 8.5" Ride Height	1
31		LH Lower Steering Knuckle Assembly	1
	58900-035	150 Ackermann Air Brake	
	58900-033	200 Ackermann Air Brake	
	58900-031	250 Ackermann Air Brake	
	58900-055	150 Ackermann Hydraulic Brake	
	58900-053	200 Ackermann Hydraulic Brake	
	58900-051	250 Ackermann Hydraulic Brake	
32		RH Lower Steering Knuckle Assembly	1
	58900-036	150 Ackermann Air Brake	
	58900-034	200 Ackermann Air Brake	
	58900-032	250 Ackermann Air Brake	
	58900-056	150 Ackermann Hydraulic Brake	
	58900-054	200 Ackermann Hydraulic Brake	
	58900-052	250 Ackermann Hydraulic Brake	
33	60903-016	LH Upper Steering Knuckle Assembly	1
34	60904-002	RH Upper Steering Knuckle Assembly	1
	60961-040	**Kingpin Bushing and Bearing Service Kit, Axle Set,** Includes Kit Nos. 60961-009 & -039	
	60961-009	**LH Kingpin Bushing w/Composite Thrust Bearing Service Kit,** Includes Key Nos. 35-38, 40-42 and Loctite	
	60961-039	**RH Kingpin Bushing w/Roller Thrust Bearing Service Kit,** Includes Key Nos. 35-37, 39-42 and Loctite	
35	59156-000	Grease Cap Assembly	4
36	58937-000	Retaining Ring	4
37	58909-000	Kingpin Bushing	4
	60961-043	**Thrust Bearing Service Kit, Axle Set,** Includes Kit Nos. 60961-041 & 60961-042	
	60961-041	**LH Composite Thrust Bearing Service Kit,** Includes Key Nos. 38, 40-42 and Loctite	
	60961-042	**RH Roller Thrust Bearing Service Kit,** Includes Key Nos. 39-42 and Loctite	
38	59828-000	LH Composite Thrust Bearing	1
39	64256-000	RH Roller Thrust Bearing	1
40		Kingpin Shim	
	60259-002	0.047"	2
	60259-001	0.005" (As needed for service)	
41	58910-001	Kingpin Seal, *Replaces 58910-000*	4
42	60236-001	⅝"-11 UNC Socket Head Cap Screw	4
Not Shown	60937-000	Loctite (Red) Compound Tube	1
43	64246-000	ABS Sensor Sleeve	2
44		***Tie Rod Assembly, 10K, 5.36 Drop Includes Key Nos. 45-49	1
	66699-003	200 Ackermann, *Replaces 59948-005*	
	66699-001	250 Ackermann, *Replaces 59948-006*	
45		*⅞" Castle Nut	2
	60961-139	***Tie Rod End Service Kit, Axle Set,** *Replaces 60961-012,* Includes Kit Nos. 60961-137 & -138	
	60961-137	****LH Tie Rod End Service Kit, Replaces 60961-029* Includes Key Nos. 46, 48-49	
	60961-138	***RH Tie Rod End Service Kit,** *Replaces 60961-030,* Includes Key Nos. 47-49	
46	66645-001	***LH Tie Rod End, *Replaces 64004-001*	1
47	66645-002	***RH Tie Rod End, *Replaces 64004-002*	1
48	22962-007	⅞" Flat Washer	2
49	17800-004	Tie Rod Nut Cotter Pin	2
	60961-069	**Stop Bolt Service Kit, One Side,** Includes Key Nos. 50-51	
50	60238-001	½"-13 UNC Square Head Bolt	2
51	60240-000	½"-13 UNC Hex Jam Nut	2
52	59952-003	Top Axle Wrap	2
53	64722-003	Bottom Axle Wrap	2
	60961-015	**Top/Bottom Axle Wrap Liner Service Kit, One Side,** Includes Key Nos. 54-55	
54	60508-000	Top Axle Wrap Liner	2
55	59845-000	Bottom Axle Wrap Liner	2
		Clamp Group Service Kit, One Side, Includes Key Nos. 56-58	
	60961-051	6.5" Ride Height	
	60961-052	8.5" Ride Height	
56		¾"-16 UNF Hex bolt	8
	21867-044	6.5" Ride Height - 10.0"	
	21867-045	8.5" Ride Height - 12.0"	
57	22962-001	¾" Flat Washer	8
58	17700-035	¾"-16 UNF 2B Nylon Locknut	8
Not Shown	18831-021	Dowel Pin, 8.5" Ride Height - 2.0"	2
59		Top Pad	
	64516-001	LH	1
	64516-002	RH	1
60		Front Axle Spacer	1
	64536-010	LH 6.5" Ride Height	
	64536-060	LH 8.5" Ride Height	
	64536-050	RH 8.5" Ride Height	

• See notes on page 20

8K/10K Capacity

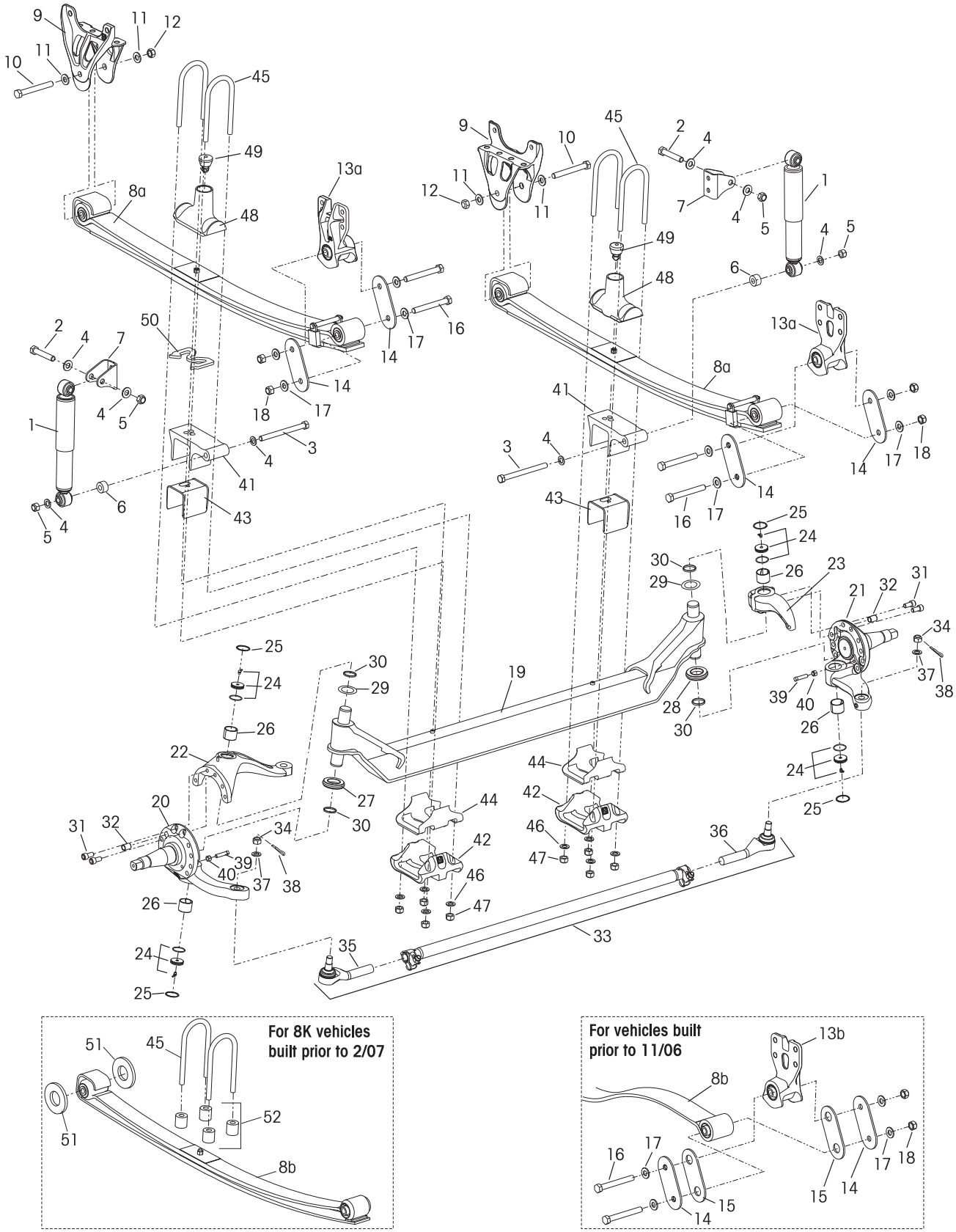

KEY NO.	PART NO.	DESCRIPTION	NO.REQ.
1	58913-009L	Shock Absorber, *Replaces 58913-007*	2
2		**¾"-10 UNC Upper Shock Bolt	2
3		**¾"-10 UNC Lower Shock Bolt	2
4		**¾" Hardened Washer	8
5		**¾"-10 UNC Hex Locknut	4
6	59946-001	Shock Spacer	2
7	59423-002	Shock Bracket	2
		Leaf Spring Assembly Service Kit,	
		• For vehicles built after 11/06,	
		Includes Key Nos. 8a, 13a, 14	
	60961-161	8K	
	60961-162	10K	
		Leaf Spring Assembly	2
8a		• For vehicles built after 11/06	
	66623-001	8K	
	66624-001	10K	
8b		• For vehicles built prior to 11/06	
	66364-000	8K	
	60511-000	10K	
9	64488-002	Front Hanger, *Replaces 64488-000*	2
10		**M20 Hex Bolt - 170mm	2
11		**M20 Hardened Washer	4
12		**M20 Locknut	2
		Rear Shackle Bracket	2
13a	66510-001	For vehicles built after 11/06	
13b	64316-000	For vehicles built prior to 11/06	
14	64314-000	Rear Shackle Plate	4
15	64159-000	Thrust Washer	4
		Only for vehicles built prior to 11/06	
16		**M20 Hex Bolt - 150mm	4
17		**M20 Hardened Washer	8
18		**M20 Locknut	4
	60952-XXX	STEERTEK Axle Assembly	1
		Contact Hendrickson Tech Service for Part No.	
		Includes Key Nos. 19-44	
19	64905-004	Axle & Kingpin Assembly	1
		6.5", 8.5" Ride Height	
20		LH Lower Steering Knuckle Assembly	1
	58900-035	150 Ackermann Air Brake	
	58900-033	200 Ackermann Air Brake	
	58900-031	250 Ackermann Air Brake	
	58900-055	150 Ackermann Hydraulic Brake	
	58900-053	200 Ackermann Hydraulic Brake	
	58900-051	250 Ackermann Hydraulic Brake	
21		RH Lower Steering Knuckle Assembly	1
	58900-036	150 Ackermann Air Brake	
	58900-034	200 Ackermann Air Brake	
	58900-032	250 Ackermann Air Brake	
	58900-056	150 Ackermann Hydraulic Brake	
	58900-054	200 Ackermann Hydraulic Brake	
	58900-052	250 Ackermann Hydraulic Brake	
22	60903-016	LH Upper Steering Knuckle Assembly	1
23	60904-002	RH Upper Steering Knuckle Assembly	1
	60961-040	**Kingpin Bushing and Bearing Service Kit, Axle Set,** Includes Kit Nos. 60961-009 & -039	
	60961-009	**LH Kingpin Bushing w/Composite Thrust Bearing Service Kit,** Includes Key Nos. 24-27, 29-31 and Loctite	
	60961-039	**RH Kingpin Bushing w/Roller Thrust Bearing Service Kit,** Includes Key Nos. 24-26, 28-31 and Loctite	
24	59156-000	Grease Cap Assembly	4
25	58937-000	Retaining Ring	4
26	58909-000	Kingpin Bushing	4

KEY NO.	PART NO.	DESCRIPTION	NO.REQ.
	60961-043	**Thrust Bearing Service Kit, Axle Set,** Includes Kit Nos. 60961-041& -042	
	60961-041	**LH Composite Thrust Bearing Service Kit,** Includes Key Nos. 27, 29-31 and Loctite	
	60961-042	**RH Roller Thrust Bearing Service Kit,** Includes Key Nos. 28-31 and Loctite	
27	59828-000	LH Composite Thrust Bearing	1
28	64256-000	RH Roller Thrust Bearing	1
29		Kingpin Shim	
	60259-002	0.047"	2
	60259-001	0.005" (As needed for service)	
30	58910-001	Kingpin Seal, *Replaces 58910-000*	4
31	60236-001	⅝"-11 UNC Socket Head Cap Screw	4
Not Shown	60937-000	Loctite (Red) Compound Tube	1
32	64246-000	ABS Sensor Sleeve	2
33		***Tie Rod Assembly, 10K, 5.36 Drop	1
		Includes Key Nos. 34-38	
	66699-003	200 Ackermann, *Replaces 59948-005*	
	66699-001	250 Ackermann, *Replaces 59948-006*	
34		*⅞" Castle Nut	2
	60961-139	***Tie Rod End Service Kit, Axle Set,** Replaces 60961-012, Includes Kit Nos. 60961-137 & -138	
	60961-137	***LH Tie Rod End Service Kit,** Replaces 60961-029, Includes Key Nos. 35, 37-38	
	60961-138	***RH Tie Rod End Service Kit,** *Replaces 60961-030*, Includes Key Nos. 36-38	
35	66645-001	***LH Tie Rod End, *Replaces 64004-001*	1
36	66645-002	***RH Tie Rod End, *Replaces 64004-002*	1
37	22962-007	⅞" Flat Washer	2
38	17800-004	Tie Rod Nut Cotter Pin	2
	60961-069	**Stop Bolt Service Kit, One Side,** Includes Key Nos. 39-40	
39	60238-001	½"-13 UNC Square Head Bolt	2
40	60240-000	½"-13 UNC Hex Jam Nut	2
41	59952-003	Top Axle Wrap	2
42	64722-003	Bottom Axle Wrap	2
	60961-015	**Top/Bottom Axle Wrap Liner Service Kit, One Side,** Includes Key Nos. 43-44	
43	60508-000	Top Axle Wrap Liner	2
44	59845-000	Bottom Axle Wrap Liner	2
		Clamp Group Service Kit, One side,	
		Includes Key Nos. 45-47	
	60961-140	6.5" Ride Height	
	60961-141	8.5" Ride Height	
45		¾"-16 UNF U-bolt	4
	64804-110	6.5" Ride Height - 11.0"	
	64804-130	8.5" Ride Height - 13.0"	
46	22962-001	¾" Flat Washer	8
47	17700-035	¾"-16 UNF 2B Nylon Locknut	8
Not Shown	18831-021	Dowel Pin, 8.5" Ride Height - 2.0"	1
	64506-000	Top Pad/Axle Stop Assembly	
		Includes Key Nos. 48-49	
48	64519-000	Top Pad	2
49	64080-000	Rubber Axle Stop	2
50		Front Axle Spacer	1
	64536-010	LH 6.5" Ride Height	
	64536-060	LH 8.5" Ride Height	
Not Shown	64536-050	RH 8.5" Ride Height	
51	66164-000	Thrust Pad Washer	2
		For 8K vehicles built prior to 2/07	
52	66366-001	Clamp Group Spacer	4
		For 8K vehicles built prior to 2/07	

• See notes on page 20

14.6K Capacity – Left Hand Drive STEERTEK Axle

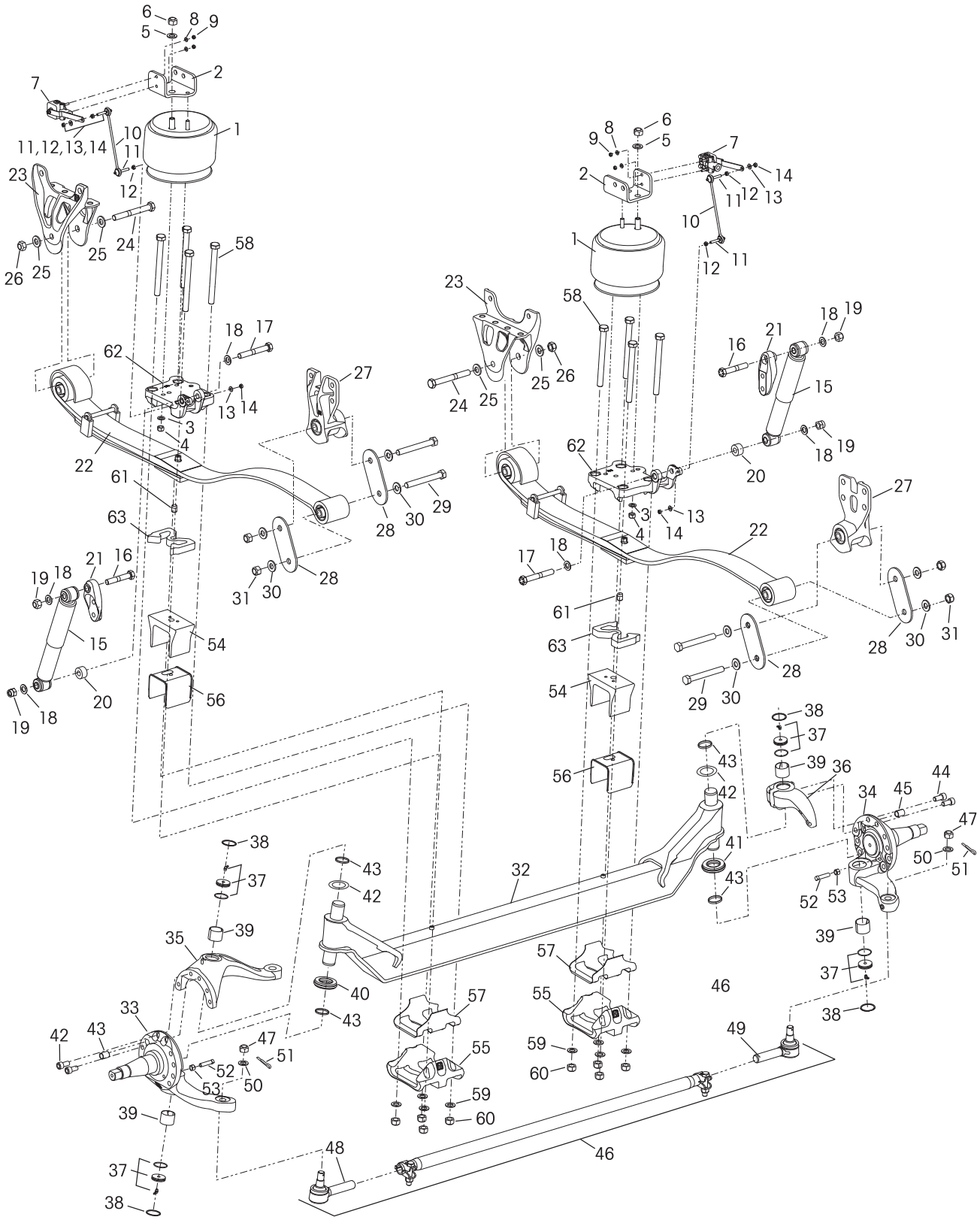

KEY NO.	PART NO.	DESCRIPTION	NO.REQ.
1	66865-002L	Air Spring	2
2	66807-001	Air Spring Bracket	2
3	22962-014	½" Hardened Washer	2
4	17730-015	½"-13 UNC Nylon Locknut	2
5		**¾" Hardened Washer	2
6		**¾"-10 UNC Nylon Locknut	2
	59013-000	Height Control Valve Assembly	2
		Includes Key Nos. 7-9	
7	60501-000	Height Control Valve	2
8	22962-028	¼" Hardened Washer	4
9	49983-000	¼"-20 UNC Locknut	4
	66825-001	HCV Linkage Assembly	2
		Includes Key Nos. 10-14	
10	59428-005	HCV Linkage	2
11		*5/16"-18 UNC Stud - 2.44"	4
12		*5/16"-18 UNC Hex Nut	4
13		*5/16" Hardened Washer	4
14		*5/16"-18 UNC Locknut	4
15	58913-011L	Shock Absorber	2
16		**¾"-10 UNC Upper Shock Bolt	2
17		**¾"-10 UNC Lower Shock Bolt	2
18		**¾" Hardened Washer	6
19		**¾"-10 UNC Hex Locknut	4
20	59946-006	Shock Spacer	2
21	65000-002	Shock Bracket	2
22	66805-001	Leaf Spring Assembly	2
23	64488-002	Front Hanger	2
24		**M20 Hex Bolt - 170 mm	2
25		**M20 Hardened Washer	4
26		**M20 Locknut	2
27	66510-001	Rear Shackle Bracket	2
28	64314-000	Rear Shackle Plate	4
29		**M20 Hex Bolt - 150 mm	4
30		**M20 Hardened Washer	8
31		**M20 Locknut	4
	60952-XXX	Axle Assembly, Includes Key Nos. 32-57	1
		Contact Hendrickson Tech Service for Part No.	
32		Axle & Kingpin Assembly	1
		6.8", 7.8", 8.8" and 9.8" Ride Height	
	64905-004	13.2K	
	64905-007	14.6K	
33		LH Lower Steering Knuckle Assembly	1
	58900-035	150 Ackermann Air Brake	
	58900-033	200 Ackermann Air Brake	
	58900-031	250 Ackermann Air Brake	
	58900-055	150 Ackermann Hydraulic Brake	
	58900-053	200 Ackermann Hydraulic Brake	
	58900-051	250 Ackermann Hydraulic Brake	
34		RH Lower Steering Knuckle Assembly	1
	58900-036	150 Ackermann Air Brake	
	58900-034	200 Ackermann Air Brake	
	58900-032	250 Ackermann Air Brake	
	58900-056	150 Ackermann Hydraulic Brake	
	58900-054	200 Ackermann Hydraulic Brake	
	58900-052	250 Ackermann Hydraulic Brake	
35	60903-055	LH Upper Steering Knuckle Assembly	1
36	60904-002	RH Upper Steering Knuckle Assembly	1
	60961-040	**Kingpin Bushing and Bearing Service Kit, Axle Set,** Includes Kit Nos. 60961-009 & -039	
	60961-009	**LH Kingpin Bushing w/ Composite Thrust Bearing Service Kit,** Includes Key Nos. 37-40, 42-44 and Loctite	
	60961-039	**RH Kingpin Bushing w/ Roller Thrust Bearing Service Kit,** Includes Key Nos. 37-39, 41-44 and Loctite	
37	59156-000	Grease Cap Assembly	4
38	58937-000	Retaining Ring	4
39	58909-000	Kingpin Bushing	4

KEY NO.	PART NO.	DESCRIPTION	NO.REQ.
	60961-043	**Thrust Bearing Service Kit, Axle Set,** Includes Kit Nos. 60961-041 & 60961-042	
	60961-041	**LH Composite Thrust Bearing Service Kit,** Includes Key Nos. 40, 42-44 and Loctite	
	60961-042	**RH Roller Thrust Bearing Service Kit,** Includes Key Nos. 41-44 and Loctite	
40	59828-000	LH Composite Thrust Bearing	1
41	64256-000	RH Roller Thrust Bearing	1
42		Kingpin Shim	
	60259-002	0.047"	2
	60259-001	0.005" (As needed for service)	
43	58910-001	Kingpin Seal, *Replaces 58910-000*	4
44	60236-001	⅝"-11 UNC Socket Head Cap Screw	4
Not Shown	60937-000	Loctite (Red) Compound Tube	1
45	64246-000	ABS Sensor Sleeve	2
46		***Tie Rod Assembly, 14.6K, 5.36 Drop	1
		Includes Key Nos. 47-51	
	64006-002	150/200 Ackermann	
	64006-003	250 Ackermann	
47		*⅞" Castle Nut	2
	60961-011	***Tie Rod End Service Kit, Axle Set,** Includes Kit Nos. 60961-027 & -028	
	60961-027	***LH Tie Rod End Service Kit,** Includes Key Nos. 48, 50-51	
	60961-028	***RH Tie Rod End Service Kit,** Includes Key Nos. 49-51	
48	64002-001	***LH Tie Rod End	1
49	64002-002	***RH Tie Rod End	1
50	22962-007	⅞" Flat Washer	2
51	17800-004	Tie Rod Nut Cotter Pin	2
	60961-069	**Stop Bolt Service Kit, One Side,** Includes Key Nos. 52-53	
52	60238-001	½"-13 UNC Square Head Bolt	2
53	60240-000	½"-13 UNC Hex Jam Nut	2
54	59952-026	Top Axle Wrap	2
55	64722-003	Bottom Axle Wrap	2
	60961-015	**Top/Bottom Axle Wrap Liner Service Kit, One Side,** Includes Key Nos. 56-57	
56	60508-000	Top Axle Wrap Liner	2
57	59845-000	Bottom Axle Wrap Liner	2
		Clamp Group Service Kit, One side, Includes Key Nos. 58-60	
	60961-051	6.8" Ride Height	
	60961-146	7.8" Ride Height	
	60961-052	8.8" Ride Height	
	60961-147	9.8" Ride Height	
58		¾"-16 UNF Hex bolt	8
	21867-044	6.8" Ride Height - 10.0"	
	21867-027	7.8" Ride Height - 11.0"	
	21867-045	8.8" Ride Height - 12.0"	
	21867-035	9.8" Ride Height - 13.0"	
59	22962-001	¾" Flat Washer	8
60	17700-035	¾"-16 UNF 2B Nylon Locknut	8
61		Dowel Pin	2
		6.8" Ride Height	None Req.
	18831-022	7.8" Ride Height - 1.13"	
	18831-021	8.8" Ride Height - 2.0"	
	18831-023	9.8" Ride Height - 3.0"	
62		Top Pad	
	66814-001	LH	1
	66814-002	RH	1
63		LH/RH Front Axle Spacer	2
		6.8" Ride Height	None Req.
	64536-025	7.8" Ride Height	
	64536-050	8.8" Ride Height	
	64536-075	9.8" Ride Height	

• See notes on page 20

13.2K/14.6K Capacity – Left Hand Drive STEERTEK Axle

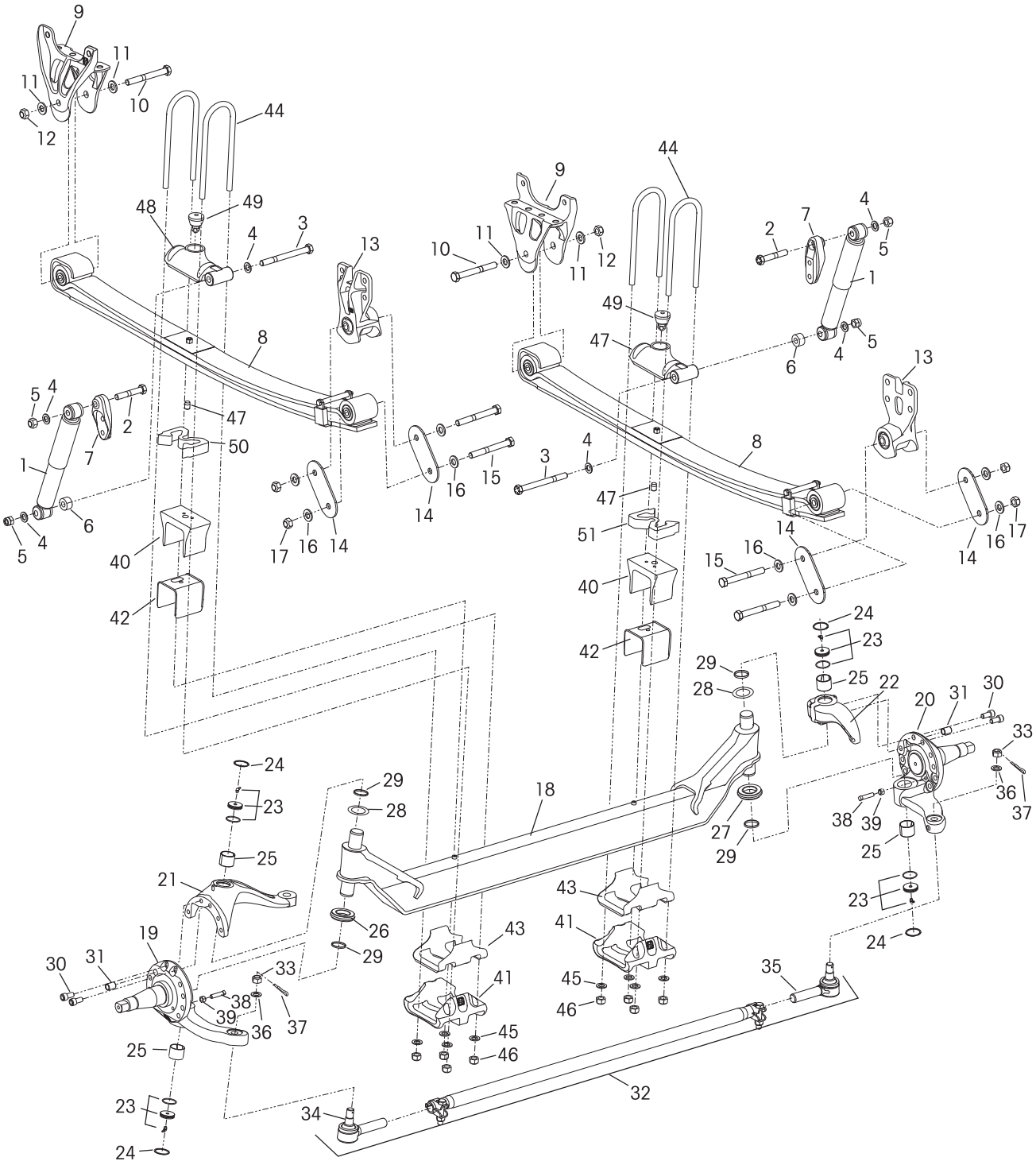

KEY NO.	PART NO.	DESCRIPTION	NO.REQ.
1	58913-010L	Shock Absorber	2
2		**¾"-10 UNC Upper Shock Bolt	2
3		**¾"-10 UNC Lower Shock Bolt	2
4		**¾" Hardened Washer	6
5		**¾"-10 UNC Hex Locknut	4
6	59946-001	Shock Spacer	2
7	65000-002	Shock Bracket	2
8		Leaf Spring Assembly	2
	66625-001	13.2K	
	66626-001	14.6K	
9	64488-002	Front Hanger	2
10		**M20 Hex Bolt - 170 mm	2
11		**M20 Hardened Washer	4
12		**M20 Locknut	2
13	66510-001	Rear Shackle Bracket	2
14	64314-000	Rear Shackle Plate	4
15		**M20 Hex Bolt - 150 mm	4
16		**M20 Hardened Washer	8
17		**M20 Locknut	4
	60952-XXX	STEERTEK Axle Assembly, Includes Key Nos. 18-43, Contact Hendrickson Tech Services for Part No.	1
18		Axle & Kingpin Assembly 6.8", 7.8", 8.8" and 9.8" Ride Height	1
	64905-002	13.2K	
	64905-005	14.6K	
19		LH Lower Steering Knuckle Assembly	1
	58900-035	150 Ackermann Air Brake	
	58900-033	200 Ackermann Air Brake	
	58900-031	250 Ackermann Air Brake	
	58900-055	150 Ackermann Hydraulic Brake	
	58900-053	200 Ackermann Hydraulic Brake	
	58900-051	250 Ackermann Hydraulic Brake	
20		RH Lower Steering Knuckle Assembly	1
	58900-036	150 Ackermann Air Brake	
	58900-034	200 Ackermann Air Brake	
	58900-032	250 Ackermann Air Brake	
	58900-056	150 Ackermann Hydraulic Brake	
	58900-054	200 Ackermann Hydraulic Brake	
	58900-052	250 Ackermann Hydraulic Brake	
21	60903-055	LH Upper Steering Knuckle Assembly	1
22	60904-002	RH Upper Steering Knuckle Assembly	1
	60961-040	**Kingpin Bushing and Bearing Service Kit, Axle Set,** Includes Kit Nos. 60961-009 & -039	
	60961-009	**LH Kingpin Bushing w/ Composite Thrust Bearing Service Kit,** Includes Key Nos. 23-26, 28-30 and Loctite	
	60961-039	**RH Kingpin Bushing w/ Roller Thrust Bearing Service Kit,** Includes Key Nos. 23-25, 27-30 and Loctite	
23	59156-000	Grease Cap Assembly	4
24	58937-000	Retaining Ring	4
25	58909-000	Kingpin Bushing	4
	60961-043	**Thrust Bearing Service Kit, Axle Set,** Includes Kit Nos. 60961-041& -042	
	60961-041	**LH Composite Thrust Bearing Service Kit,** Includes Key Nos. 26, 28-30 and Loctite	
	60961-042	**RH Roller Thrust Bearing Service Kit,** Includes Key Nos. 27-30 and Loctite	
26	59828-000	LH Composite Thrust Bearing	1
27	64256-000	RH Roller Thrust Bearing	1
28		Kingpin Shim	
	60259-002	0.047"	2
	60259-001	0.005" (As needed for service)	
29	58910-001	Kingpin Seal, *Replaces 58910-000*	4
30	60236-001	⅝"-11 UNC Socket Head Cap Screw	4
Not Shown	60937-000	Loctite (Red) Compound Tube	1
31	64246-000	ABS Sensor Sleeve	2

KEY NO.	PART NO.	DESCRIPTION	NO.REQ.
32		***Tie Rod Assembly, 14.6K, 5.36 Drop Includes Key Nos. 33-37	1
	64006-002	150/200 Ackermann	
	64006-003	250 Ackermann	
33		*⅞" Castle Nut	2
	60961-011	***Tie Rod End Service Kit, Axle Set,** Includes Kit Nos. 60961-027 & -028	
	60961-027	***LH Tie Rod End Service Kit,** Includes Key Nos. 34, 36-37	
	60961-028	***RH Tie Rod End Service Kit,** Includes Key Nos. 35-37	
34	64002-001	***LH Tie Rod End	1
35	64002-002	***RH Tie Rod End	1
36	22962-007	⅞" Flat Washer	2
37	17800-004	Tie Rod Nut Cotter Pin	2
	60961-069	**Stop Bolt Service Kit, One Side,** Includes Key Nos. 38-39	
38	60238-001	½"-13 UNC Square Head Bolt	2
39	60240-000	½"-13 UNC Hex Jam Nut	2
40	59952-026	Top Axle Wrap	2
41	64722-003	Bottom Axle Wrap	2
	60961-015	**Top/Bottom Axle Wrap Liner Service Kit, One Side,** Includes Key Nos. 42-43	
42	60508-000	Top Axle Wrap Liner	2
43	59845-000	Bottom Axle Wrap Liner	2
		Clamp Group Service Kit, One side, Includes Key Nos. 44-46	
	60961-142	6.8" Ride Height	
	60961-143	7.8" Ride Height	
	60961-144	8.8" Ride Height	
	60961-145	9.8" Ride Height	
44		¾"-16 UNF U-bolt	4
	64804-120	6.8" Ride Height - 12.0"	
	64804-130	7.8" Ride Height - 13.0"	
	64804-140	8.8" Ride Height - 14.0"	
	64804-150	9.8" Ride Height - 15.0"	
45	22962-001	¾" Flat Washer	8
46	17700-035	¾"-16 UNF 2B Nylon Locknut	8
47		Dowel Pin	2
		6.8" Ride Height	None Req.
	18831-022	7.8" Ride Height - 1.13"	
	18831-021	8.8" Ride Height - 2.0"	
	18831-023	9.8" Ride Height - 3.0"	
	66806-001	Top Pad/Axle Stop Assembly Includes Key Nos. 48-49	
48	66666-000	Top Pad	2
49	64080-000	Rubber Axle Stop	2
50		LH Front Axle Spacer	1
	64536-010	6.8" Ride Height	
	64536-035	7.8" Ride Height	
	64536-060	8.8" Ride Height	
	64536-085	9.8" Ride Height	
51		RH Front Axle Spacer	1
		6.8" Ride Height	None Req.
	64536-025	7.8" Ride Height	
	64536-050	8.8" Ride Height	
	64536-075	9.8" Ride Height	

• See notes on page 20

STEERTEK 13.2K/14.6K Capacity

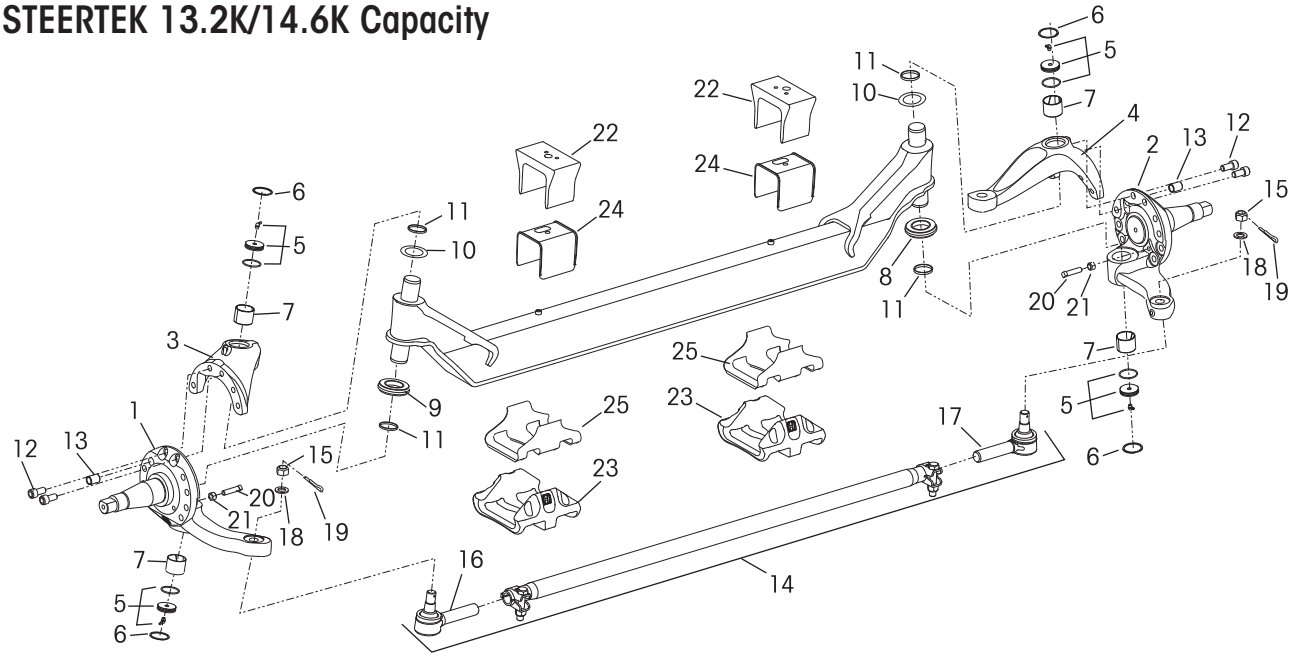

KEY NO.	PART NO.	DESCRIPTION	NO.REQ.
		STEERTEK Axle Assembly Includes Key Nos. 1-25	1
	67905-402	SOFTEK Standard Drop - 13.2K	
	67905-404	AIRTEK Deep Drop - 13.2K	
	67905-405	SOFTEK Standard Drop - 14.6K	
	67905-407	AIRTEK Deep Drop - 14.6K	
1		LH Lower Steering Knuckle Assembly	1
	58900-035	150 Ackermann Air Brake	
	58900-033	200 Ackermann Air Brake	
	58900-031	250 Ackermann Air Brake	
	58900-055	150 Ackermann Hydraulic Brake	
	58900-053	200 Ackermann Hydraulic Brake	
	58900-051	250 Ackermann Hydraulic Brake	
2		RH Lower Steering Knuckle Assembly	1
	58900-036	150 Ackermann Air Brake	
	58900-034	200 Ackermann Air Brake	
	58900-032	250 Ackermann Air Brake	
	58900-056	150 Ackermann Hydraulic Brake	
	58900-054	200 Ackermann Hydraulic Brake	
	58900-052	250 Ackermann Hydraulic Brake	
3	60904-001	LH Upper Steering Knuckle Assembly	1
4	70903-001	RH Upper Steering Knuckle Assembly	1
	60961-040	**Kingpin Bushing and Bearing Service Kit, Axle Set,** Includes Kit Nos. 60961-009 & -039	
	60961-009	**RH Kingpin Bushing w/Composite Thrust Bearing Service Kit,** Includes Key Nos. 5-8, 10-12, Loctite	
	60961-039	**LH Kingpin Bushing w/Roller Thrust Bearing Service Kit,** Includes Key Nos. 5-7, 9-12, Loctite	
5	59156-000	Grease Cap Assembly	4
6	58937-000	Retaining Ring	4
7	58909-000	Kingpin Bushing	4
	60961-043	**Thrust Bearing Service Kit, Axle Set** Includes Kit Nos. 60961-041 & -042	
	60961-041	**RH Composite Thrust Bearing Service Kit,** Includes Key Nos. 8, 10-12, Loctite	

KEY NO.	PART NO.	DESCRIPTION	NO.REQ.
60961-042		**LH Roller Thrust Bearing Service Kit,** Includes Key Nos. 9-12, Loctite	
8	59828-000	RH Composite Thrust Bearing	1
9	64256-000	LH Roller Thrust Bearing	1
10		Kingpin Shim	
	60259-002	0.047"	2
	60259-001	0.005" (As needed for service)	
11	58910-001	Kingpin Seal, *Replaces 58910-000*	4
12	60236-001	⅝"-11 UNC Socket Head Cap Screw	4
Not Shown	60937-000	Loctite (Red) Compound Tube	1
13	64246-000	ABS Sensor Sleeve	2
14		Tie Rod Assembly, 13.2K, Includes Key Nos. 15-19	1
	60239-005	150/200 Ackermann	
	60239-001	250 Ackermann	
15		*⅞" Castle Nut	2
	60961-010	**Tie Rod End Service Kit, Axle Set,** Includes Kit Nos. 60961-025 & -026	
	60961-025	**LH Tie Rod End Service Kit,** Includes Key Nos. 16, 18-19	
	60961-026	**RH Tie Rod End Service Kit,** Includes Key Nos. 17-19	
16	64000-001	LH Tie Rod End	1
17	64000-002	RH Tie Rod End	1
18	22962-007	⅞" Flat Washer	2
19	17800-004	Tie Rod Nut Cotter Pin	2
	60961-069	**Stop Bolt Service Kit, One Side,** Includes Nos. 20-21	
20	60238-001	½"-13 UNC Square Head Bolt	2
21	60240-000	½"-13 UNC Hex Jam Nut	2
22	59952-026	Top Axle Wrap - 13.2K	2
	59952-031	Top Axle Wrap - 14.6K	
23	64722-003	Bottom Axle Wrap	2
	60961-015	**Top/Bottom Axle Wrap Liner Service Kit, One Side,** Includes Nos. 24-25	
24	60508-000	Top Axle Wrap Liner	2
25	59845-000	Bottom Axle Wrap Liner	2

NOTE: * Item included in assembly only, part not sold separately.
** Not supplied by Hendrickson, used for reference only. Refer to OEM (vehicle manufacturer) for more information. Hendrickson is not responsible for components supplied by vehicle manufacturer. For assistance with maintenance and rebuild instructions on these components see vehicle manufacturer.
*** Hendrickson supplies different tie rod assemblies and each type may take a different replacement tie rod end kit to service. Prior to ordering, find the part number on the tie rod tube, refer to Hendrickson Publication No. SEU-0223 or contact Hendrickson Truck Parts toll-free at 1-866-755-5968 for corresponding kit numbers.

NOTE: Quantities of service kit components may vary from amount shown in lists.

SECTION 6
Towing Procedure

Hendrickson recommends that a vehicle equipped with a STEERTEK axle be towed by the following methods (listed in order of preference) for ON-HIGHWAY or ON-ROADWAY applications.

- **METHOD 1** — Wheel lift, the ideal towing procedure
- **METHOD 2** — Towing the vehicle from the rear
- **METHOD 3** — Conventional axle fork

Please read, understand and comply with any additional towing instructions and safety precautions that may be provided by the vehicle manufacturer.

Hendrickson will not be responsible for any damage to the axle, suspension or other vehicle components resulting from any towing method or fixture not authorized by Hendrickson.

Please contact Hendrickson Tech Services toll-free at 1-866-755-5968 (U.S. and Canada) or send e-mail to: techservices@hendrickson-intl.com with any questions regarding proper towing procedures for vehicles equipped with a STEERTEK axle.

METHOD 1 — WHEEL LIFT

This method provides the greatest ease for towing the vehicle. Lifting at the tires helps reduce the risk of possible damage to the axle, suspension, and engine components during towing operations, see Figure 6-1.

FIGURE 6-1 Wheel lift method

METHOD 2 — TOWING VEHICLE FROM THE REAR

This method is preferred when the proper equipment is not available to perform the wheel lift method and is necessary for wreckers not equipped with an under lift system.

METHOD 3 — AXLE FORK LIFT

This is an alternative method for towing the vehicle, but requires standard 5" forks, (see Figures 6-2 and 6-3) and designated lift points inside the axle clamp groups. The following procedure must be used:

NOTE When lifting a vehicle with an under lift boom, care must be taken not to damage the engine's oil pan. Vehicles equipped with a front fairing may require removal of the front fairing prior to towing to prevent component damage.

- Place a spacer on the boom, to provide adequate clearance between the oil pan and the boom if necessary. Lift the vehicle in order to place spacer under tires. This will provide sufficient room under the axle to locate forks in the proper position.
- It is recommended to maintain the air in the air springs (if equipped) to help prevent damage to the air spring bump stop while towing the vehicle. An alternative air source may be necessary if the engine or compressor will not function. If the air spring is punctured, tow the steer axle suspension with the air springs deflated.
- Release the tractor brakes.
- Install safety straps prior to towing the vehicle, it is preferred to use nylon safety straps. Chains have a tendency to bind and may cause damage to the axle.
- Install the fork in the boom properly.
- Position the tow forks directly under the axle, inside the axle clamp groups as shown in Figures 6-2 and 6-3.

FIGURES 6-2 AND 6-3

PROPER TOW FORK LOCATION ON INSIDE CLAMP GROUP ON THE STEERTEK AXLE

- Prior to lifting the vehicle, ensure that the bottom axle plate is flat in the tow fork to minimize any gap between the bottom axle plate and the tow fork, see Figure 6-4.
- Lift vehicle and secure the vehicle to the boom.

FIGURE 6-4

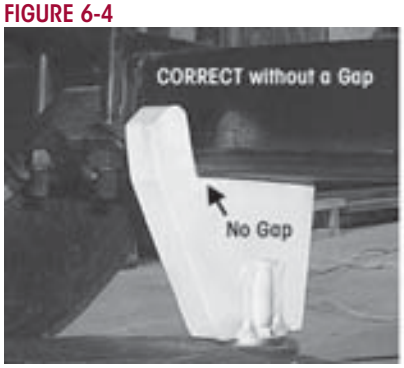

OFF-ROADWAY TOWING METHOD

WARNING

WHEN A VEHICLE IS DISABLED AND EQUIPPED WITH A STEERTEK AXLE, CARE MUST BE TAKEN TO ENSURE THERE IS NO DAMAGE TO THE SUSPENSION OR AXLE WHEN TOWING THE VEHICLE. THE USE OF A TOW STRAP IS NECESSARY TO TOW A DISABLED VEHICLE FROM A REPAIR FACILITY PARKING LOT INTO THE SHOP BAY. THE TOW STRAPS SHOULD BE CONNECTED TO THE TOW HOOKS PROVIDED BY THE VEHICLE MANUFACTURER AT THE FRONT OF THE BUMPER. IF THE USE OF TOW HOOKS IS NOT AN OPTION THEN A TOW STRAP MAY BE WRAPPED AROUND THE FRONT AXLE, (SEE FIGURE 6-5) IN A MANNER THAT IS ACCEPTABLE FOR TOWING THE VEHICLE INTO THE SHOP. DO NOT USE A TOW CHAIN AROUND THE FRONT AXLE TO TOW THE VEHICLE, DOING SO WILL DAMAGE THE AXLE AND VOID WARRANTY, SEE FIGURE 6-5.

- NYLON STRAPS OR CHAINS ARE NOT RECOMMENDED FOR ON-HIGHWAY OR ON-ROADWAY TOWING

FIGURE 6-5

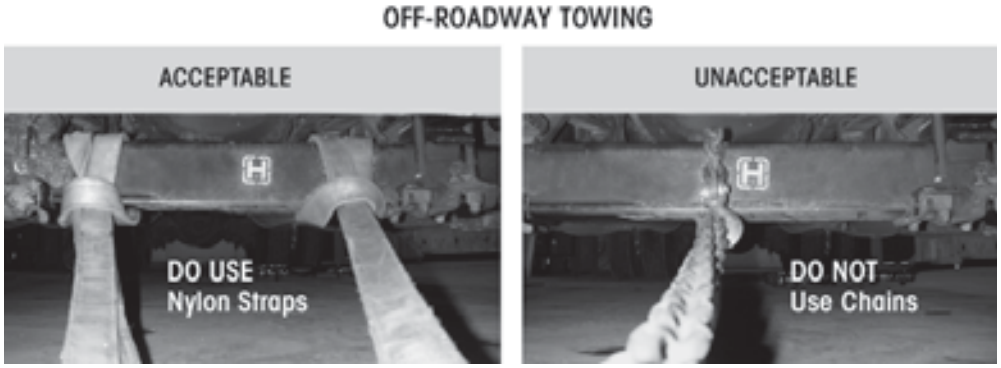

SECTION 7
Preventive Maintenance

Following appropriate inspection procedure is important to help ensure the proper maintenance and operation of the AIRTEK®/SOFTEK® suspension system and component parts function to their highest efficiency.

HENDRICKSON RECOMMENDED PREVENTIVE MAINTENANCE INTERVALS

- **The first 1,000 miles**
- **On-highway** – every 25,000 miles (40,000 km) or 6 months, whichever comes first

COMPONENT INSPECTION

- **Air spring** — Look for chaffing or any signs of spring or component damage.
- **Clamp group** — Check torque on clamp group mounting hardware. Refer to Torque Specifications in the appendix of this publication.
- **Fasteners** — Look for any loose or damaged fasteners on the entire suspension. Make sure all fasteners are tightened to the specified torque. Refer to Torque Specifications in the appendix. Use a calibrated torque wrench to check torque in a tightening direction. As soon as the fastener starts to move, record the torque. Correct the torque if necessary. Replace any worn or damaged fasteners.
- **Front hangers and shackle brackets** — Check for cracks or loose mounting hardware. Replace if necessary, see the Component Replacement Section of this publication for replacement procedure.
- **Operation** — All steering components must move freely through the full range of motion from axle stop to axle stop.
- **Shock absorber** — Look for any signs of dents or leakage, misting is not considered a leak. See Shock Absorber Inspection in this section.
- **Steel leaf spring and wrap leaf assembly** — Look for cracks. Check the front and rear bushings for any wear or deterioration. Replace spring assembly if any of the previous conditions are observed. See the Component Replacement Section of this publication for replacement procedure.
- **STEERTEK Axle** — The axle should be free of any nicks or gouges. Inspect for any cracks or dents on axle.
- **Steering pivot points** — Check for looseness at all pivot points. Inspect and lubricate all pivot points. Refer to the Trouble Shooting Guide Section in the Appendix of this publication.
- **Thrust washers (If equipped)** — Look for any signs of excessive wear to the thrust washers, shackles and shackle bracket. See Thrust Washer Inspection detailed in this section.
- **Tire wear** — Inspect tires for wear patterns that may indicate suspension damage or misalignment. See Tire Inspection in this section.
- **Top and bottom axle wrap liners** — Look for any cracking or broken pieces on liner in load bearing areas. See Axle Wrap Liner Inspection in this section.
- **Top pad (AIRTEK)** — Check for cracks or damage. Replace if necessary, see the Component Replacement Section of this publication for replacement procedure.
- **Top pad and bump stop (SOFTEK)** — Check for cracks and/or missing rubber bump stops. Replace if necessary, see the Component Replacement Section of this publication for replacement procedure.
- **Wear and damage** — Inspect all parts of suspension for wear and damage. Look for bent or cracked parts. Replace all worn or damaged parts.

See vehicle manufacturer's applicable publications for other preventive maintenance requirements.

LUBRICATION INTERVALS

For vehicles equipped with the STEERTEK axle, regular lubrication intervals should be followed to help prevent premature wear to the kingpin bushings and tie rod ends, see lubrication chart below.

NOTE The recommended service lubrication interval is a guideline, the vehicle may require increased lubrication interval depending on severity of operation.

TABLE 7-1

STEERTEK GREASING AND LUBRICATION SPECIFICATIONS				
Component	**Greasing Interval**	**Grease**	**NLGI Grade**	**Outside Temperature**
Kingpin Bushings	Maximum of 25,000 miles (40,225 kilometers) or 90 days, whichever comes first.	Multipurpose Grease	2	Refer to the lubricant manufacturer's specifications for the temperature service limits applicable to your area.
Tie Rod Ends				
Drag Link	See Vehicle Manufacturer			
NOTE: Lubrication greases acceptable for use on the STEERTEK axle will carry a designation of NLGI #2 EP and rated GC-LB or equivalent.				

KINGPIN LUBRICATION

On the Hendrickson STEERTEK front axle the kingpin grease fittings are located on the top and bottom of the kingpin steering knuckle.

1. Place the vehicle on a level floor.
2. Prior to greasing the kingpins on the vehicle, the suspension must be in a loaded condition.
3. Clean off all the grease fittings and grease gun tip with a clean shop towel prior to lubrication.
4. Lubricate the kingpins through the grease fittings on the top and bottom of the steering knuckle, see Table 7-1 above.
5. Force the required lubricant into the upper and lower kingpin grease fittings, until new lubricant flows from the upper axle beam and knuckle and the thrust bearing purge location, see Figures 7-1 and 7-2.

NOTE Greasing at the lower zerk should purge grease from the thrust bearing shell. Both sides purge in the same area. The left side of the axle has a composite style thrust bearing, see Figure 7-1 and the right side of the axle has a steel roller thrust bearing, see Figure 7-2, for right hand drive axle configuration the thrust bearings will be the opposite.

FIGURE 7-1

FIGURE 7-2

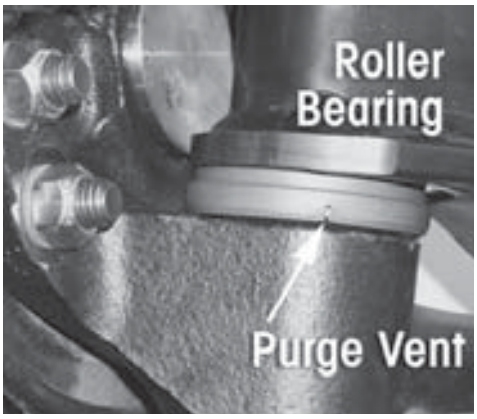

TIE ROD END LUBRICATION

LUBRICATION PROCEDURE

1. Turn the vehicle wheels straight ahead.
2. Wipe the zerk fitting and grease gun tip with clean shop towels.
3. Wipe the seal/boot clean with shop towels.
4. Attach a grease gun to the zerk fitting. Either a hand or pneumatic grease gun is acceptable. If air operated grease gun is used, system air pressure should not exceed 150 psi (1035 kPa).

CAUTION

EXCEEDING THE MAXIMUM AIR PRESSURE TO THE ZERK FITTING CAN CAUSE DAMAGE TO THE DUST BOOT AND COMPONENT FAILURE.

5. Dirt, water, and discolored old grease should flow from the relief vents or purge holes near the boot crimp or bellows area, see Figure 7-3. Continue to purge grease until fresh grease flows from the purge area.

FIGURE 7-3

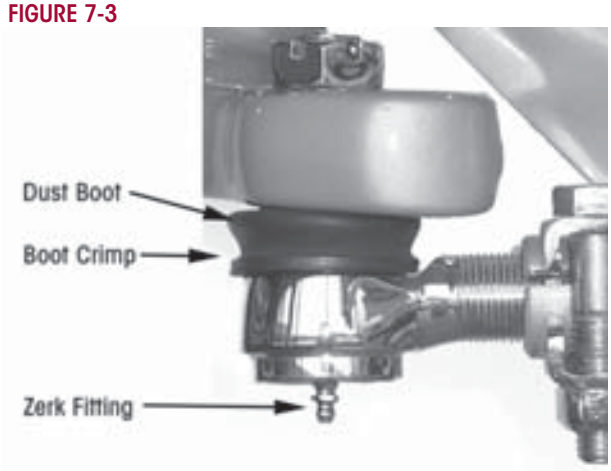

6. If the tie rod end is designed for lube service and it will not accept grease proceed as follows:
   a. Remove the zerk fitting
   b. Inspect the threaded zerk fitting hole in the tie rod end and remove any obstructions
   c. Install a new zerk fitting
   d. Continue the lubrication procedure
   e. If the tie rod end will not accept grease following this procedure it will be necessary to replace the tie rod end, see Tie Rod End n the Component Replacement Section of this publication.
7. Apply grease until all the old grease is purged from the boot and fresh grease is coming out.

TIE ROD END INSPECTION

INSPECTION PROCEDURE

Before beginning this inspection procedure, the entire system must be unloaded (i.e., the front end of the vehicle must be raised and supported with safety stands).

CAUTION

DO NOT GREASE THE TIE ROD ASSEMBLY BEFORE PERFORMING THE INSPECTION. DOING SO CAN INHIBIT EFFORTS TO DETERMINE ACTUAL WEAR.

CAUTION

REPLACE THE ENTIRE TIE ROD END IF THE BOOT IS TORN OR MISSING, FAILURE TO DO SO CAN CAUSE PREMATURE WEAR OF THE TIE ROD END.

1. Block rear wheels of vehicle. Using the bottom of the axle beam or the frame rails, raise the front end off the ground and support with stands.
2. With the engine off, turn the wheels from full left to full right and then return to the straight-ahead position.
3. Check that the boots are in place and completely installed over the tie rod ends.
4. Check for cracking or tears in the boots. Also check the boot seals for damage. Replace the entire tie rod end if the boot is damaged.

WARNING

THE CORRECT COTTER PIN MUST BE INSTALLED THROUGH THE TIE ROD END WITH THE CASTLE NUT TIGHTENED TO THE PROPER TORQUE SPECIFICATION IN ORDER TO SECURELY ATTACH THE TIE ROD. LOSS OF THE COTTER PIN CAN CAUSE THE TIE ROD END NUT TO BECOME LOOSE AND ADVERSELY AFFECT VEHICLE STEERING AND POSSIBLY RESULT IN TOTAL LOSS OF STEERING CONTROL.

5. Check that the tie rod end nut is installed and secured with a cotter pin. If the cotter pin is missing, check the nut torque specification and then install a new cotter pin. Always tighten the castle nut to specified torque when setting the cotter pin. **DO NOT** back off the nut to insert cotter pin.

WARNING

IT IS CRITICAL TO CHECK THE ⅝" TIE ROD CLAMP BOLT HEAD LOCATION TO VERIFY THE CLAMP FASTENERS HAVE SUFFICIENT CLEARANCE AWAY FROM THE LOWER SHOCK MOUNT AT FULL WHEEL CUT. THE FASTENERS MUST NOT CONTACT THE LOWER SHOCK MOUNT. FAILURE TO DO SO CAN CAUSE ONE OR MORE COMPONENTS TO FAIL CAUSING LOSS OF VEHICLE CONTROL AND POSSIBLE PERSONAL INJURY OR PROPERTY DAMAGE.

6. Verify the ⅝" tie rod clamp bolt head does not contact the lower shock mount at full wheel cut, see Figure 7-4.

WARNING

THE THREADED PORTION OF THE TIE ROD END MUST EXTEND PAST THE SLOTS INTO THE TIE ROD CROSS TUBE, SEE FIGURE 7-4. FAILURE TO DO SO CAN CAUSE COMPONENT DAMAGE, LOSS OF VEHICLE CONTROL AND POSSIBLE PERSONAL INJURY OR PROPERTY DAMAGE.

FIGURE 7-4

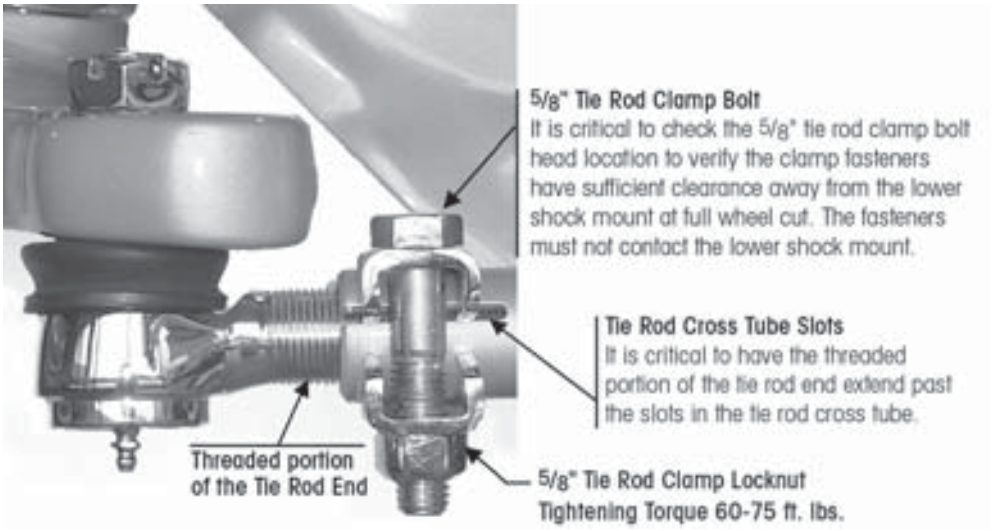

7. Check that the tie rod end is threaded correctly into the cross tube and is engaged deeper than the end of the cross tube slot. The tie rod end must be visible the entire length of the cross tube slot, see Figure 7-4.
8. Check that zerk fittings are installed. Replace a damaged zerk fitting with a new one.

CAUTION

DO NOT USE THE FOLLOWING ITEMS OR METHODS TO CHECK FOR MOVEMENT OF THE TIE ROD ASSEMBLY. DAMAGE TO COMPONENTS CAN RESULT IF:

- A CROW BAR, PICKLE FORK OR 2 X 4 ARE USED.
- ANYTHING OTHER THAN HANDS ARE USED TO GRASP THE CROSS TUBE ASSEMBLY (CAN RESULT IN DAMAGE TO THE CROSS TUBE).
- EXCESSIVE PRESSURE OR FORCE IS APPLIED TO THE TIE ROD ENDS OR THE JOINTS OF THE ASSEMBLY.

9. By hand or using a pipe wrench, with jaw protectors to avoid gouging the cross tube, rotate the cross tube toward the front of the vehicle and then toward the rear. After rotating, center the cross tube. If the cross tube will not rotate in either direction, replace both tie rod ends, see Figure 7-5.

FIGURE 7-5

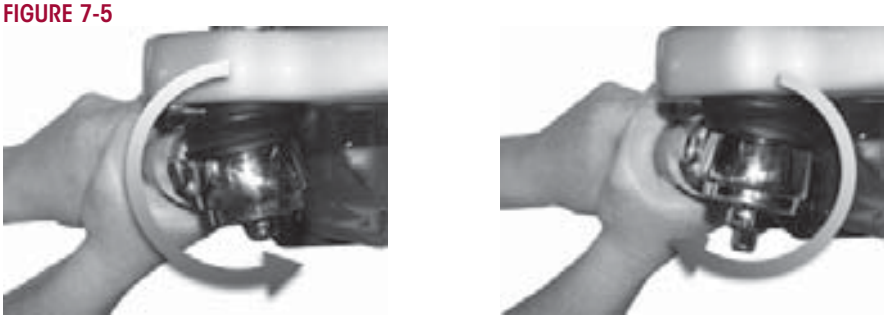

FIGURE 7-6

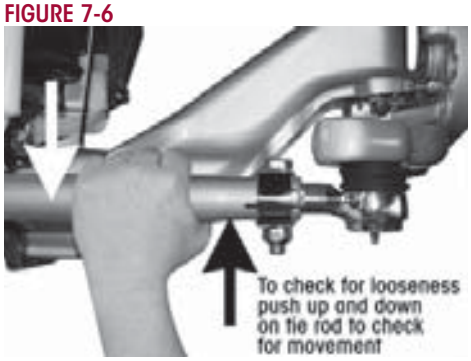

10. Position yourself directly below the tie rod end. Using both hands, grab the assembly end as close to the tie rod end as possible (no more than 6" or 152.4mm). Apply hand pressure with reasonable human effort vertically up and down in a push-pull motion several times (using approximately 50-100 pounds of force). Check for any movement or looseness at both tie rod end locations, see Figure 7-6.
11. If there is any movement in the tie rod assembly, install a magnetic based dial indicator on the Ackermann arm, see Figure 7-7.
12. Set the dial indicator to zero.
13. Apply hand pressure with reasonable human effort vertically up and down in a push-pull motion several times (using approximately 50-100 pounds of force). Observe the reading on the dial indicator.
14. If the reading is more than 0.060", replace both tie rod ends at the next service interval.
15. If a tie rod end exhibits 0.125" of movement by hand, the vehicle should be removed immediately from use and the tie rod end be replaced.

FIGURE 7-7

NOTE

According to the Commercial Vehicle Safety Alliance (CVSA), the "out of service" criteria for and commercial vehicle is: Any motion other than rotational between any linkage member and its attachment point of more than ⅛" (3mm) measured with hand pressure only. (393.209(d)), (published in the North American Standard Out-of-Service Criteria Handbook, April 1, 2006.)

CLAMP GROUP RE-TORQUE INTERVAL

1. Clamp group locknuts must be torque to specification at preparation for delivery.
2. Clamp group locknuts must be re-torqued at 1,000 miles.
3. Thereafter follow the 6 month/ 25,000 mile inspection and annual re-torque interval.
4. Ensure that the clamp group is properly aligned and the hex bolts/U-bolts are seated in the top pad, and the bottom axle wrap is centered on the top axle wrap, see Figure 7-8.

FIGURE 7-8

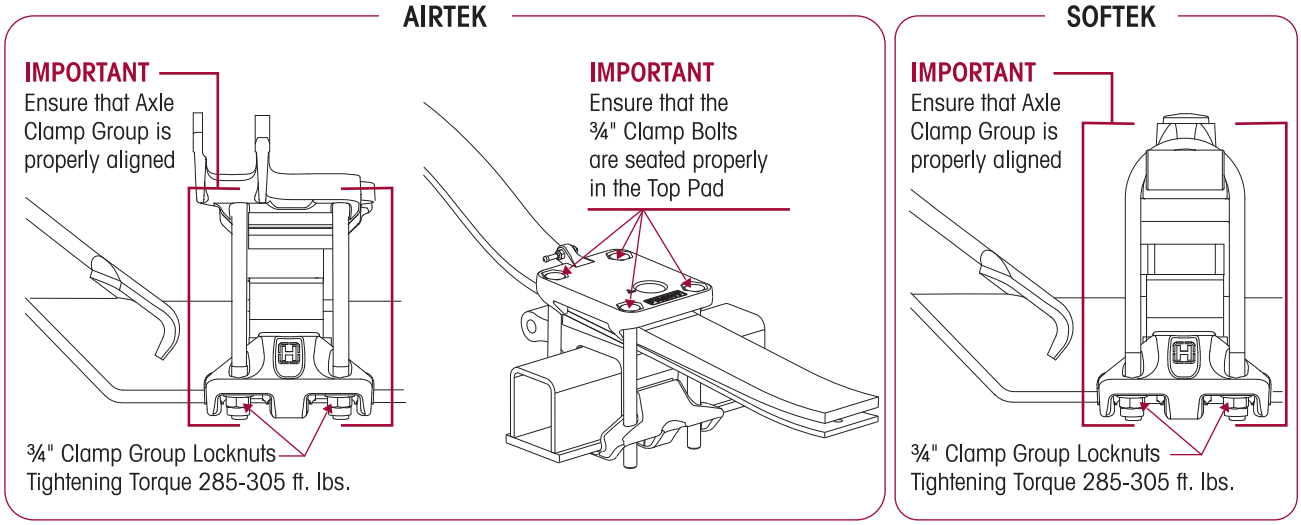

5. Check for the signs of component or bolt movement.
6. If signs of movement are present, disassemble the clamp group fasteners, check for component wear or damage and replace as necessary, then install new clamp group fasteners and repeat Steps 1 through 5.
7. Tighten the clamp group locknuts evenly in 50 foot pounds increments to 285-305 foot pounds torque in the proper pattern to achieve uniform bolt tension, see Figure 7-9.

FIGURE 7-9

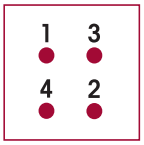

TIRE INSPECTION

The leading causes of tire wear are the following, in order of importance:

a. Tire Pressure
b. Toe Setting
c. Thrust Angle
d. Camber

- The following tire Inspection guidelines are based upon Technology & Maintenance Council (TMC) recommended practices. Any issues regarding irregular tire wear where Hendrickson is asked for assistance, will require tire and alignment maintenance records, reference TMC's literature numbers RP219A, RP230, or RP 642.
- Tire wear is normally the best indicator of vehicle alignment condition. If tires are wearing too rapidly or irregularly, alignment corrections may be needed. The tire wear patterns described below can help isolate specific alignment problems.
- The most common conditions of concern are:
  - Overall Fast Wear (Miles per 32nd)
  - Feather Wear
  - Cupping
  - Diagonal Wear
  - Rapid Shoulder Wear (One Shoulder Only)
  - One-Sided Wear

FIGURE 7-10

OVERALL FAST WEAR (Miles per 32nd)

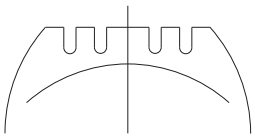

Overall Fast Wear — Fast wear can be described as exhibiting a good, but accelerated wear pattern. It is typically caused by operating conditions, such as mountainous terrain, frequency and severity of turning, abrasive road surfaces in combination with vehicle configurations and their attributes-such as power steering, heavy axle loads, high wheel cuts, setback axles, short wheel base tractors, long wheel base straight trucks. To correct this problem, consult with vehicle and tire manufacturers when specifying equipment or replacing tires. For more information, see TMC RP 219A publication, page 11. For information on how to accurately measure and record tire rates, see TMC RP 230 publication.

FIGURE 7-11

FEATHER WEAR

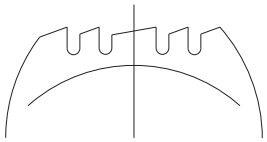

Feather wear — Tread ribs or blocks worn so that one side is higher than the other resulting in step-offs across the tread face. Generally, ribs or blocks exhibit this wear. To spot this problem, do the following:

With one hand flat on the tread of the tire and a firm down pressure, slide your hand across the tread of the tire. In one direction, the tire will feel smooth and in the opposite direction there will be a sharp edge to the tread. Typical causes of feather wear include: excessive side force scrubbing, resulting from conditions of misalignment such as excessive toe, drive axle misalignment, worn, missing or damaged suspension components, bent tie rods or other chassis misalignment.

To correct this problem, tires can be rotated to another axle for maximum utilization of remaining tread. Additionally, diagnose the vehicle itself and correct misalignment condition as required. If steer tire feathers are in opposite directions, an improper toe condition is most likely the cause. For more information, see TMC RP 219A publication, page 5.

If feather wear on both steer tires is in the same direction, drive axle or other chassis misalignment is indicated. If one steer tire shows feather wear and the other steer tire has normal wear, a combination of toe and drive axle or chassis misalignment is indicated.

FIGURE 7-12

CUPPING

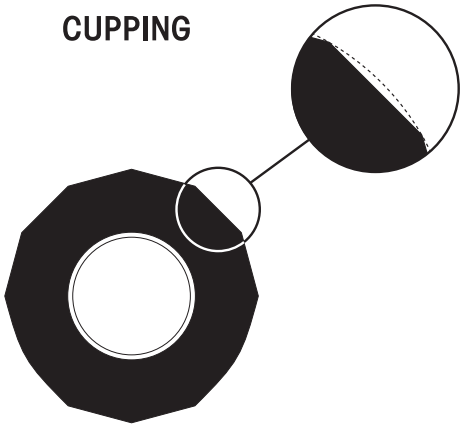

Cupping — Localized, dished out areas of fast wear creating a scalloped appearance around the tire. Cupping, which appears around the tire on the shoulder ribs, may also progress to adjoining ribs, see TMC RP 219A publication, page 7.

Cupping is usually a result of moderate-to-severe imbalance, improper rim/wheel mounting, excessive wheel end play or other assembly non-uniformity. It can also be due to lack of shock absorber control on some suspension types.

To solve cupping problems:

- Tires – Correct mismount or balance problem. If ride complaints arise, steer tires may be rotated to drive or trailer axle.
- Vehicle – Diagnose component imbalance condition, i.e., wheel, rim, hub, brake, drum. Correct as necessary.

FIGURE 7-13

DIAGONAL WEAR

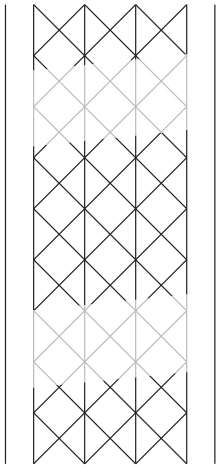

Diagonal Wear — Can be described as localized flat spots worn diagonally across the tread at approximately 25-35° angles, often repeating around the tread circumference. For more information, see TMC RP 219A publication, page 20.

Diagonal wear is usually caused by bad wheel bearings, toe out, mismounting of tire and wheel assembly to axle, and mismatched duals for size and/or inflation pressures. It may start as brake skid. Diagonal wear is aggravated by high speed empty or light load hauls.

To correct diagonal wear, reverse direction of rotation of the tire. If wear is excessive, true tire. If the source of trouble is the vehicle, diagnose cause and correct as needed.

FIGURE 7-14

RAPID SHOULDER WEAR (One Shoulder Only)

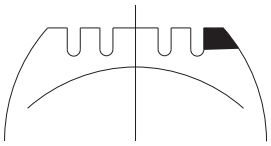

Rapid Shoulder Wear (One Shoulder Only) — Is defined as a tire worn on the edge of one shoulder, sometimes extending to inner ribs. It can progress to diagonal wipeout. For more information, see TMC RP 219A publication, page 22.

This wear condition is usually caused by excessive toe or excessive camber. These conditions can be created by a misaligned or bent axle and can also be caused by loose or worn wheel bearings.

To correct this type of rapid shoulder wear:

- Tires – Change direction of rotation of tire. If shoulder wear is severe, remove and retread.
- Vehicle – Diagnose misalignment and/or mechanical condition and correct.

FIGURE 7-15

ONE-SIDED WEAR

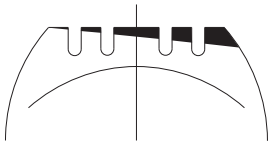

One-sided wear — Is excessive wear on one side of tire extending from the shoulder towards the center of the tread. For more information, see TMC RP 219A, page 26.

One-sided wear is usually caused by improper alignment, worn kingpins, loose wheel bearings, excessive camber, excessive axle loads, non-parallel axles, or non-uniform tire and wheel assembly caused by improper bead seating or bent wheel.

To correct one-sided wear:

- Tires – Depending on severity, rotate tires to another axle position or, if worn to minimum tread depths, submit for possible retreading.
- Vehicle – Diagnose mechanical problem and correct.

AXLE WRAP LINER INSPECTION

FIGURE 7-16

INSPECTION PROCEDURE

- Axle wrap liners are installed on the STEERTEK axle to help prevent any type of abrasion on the axle at the clamp group area. Any time an axle wrap is removed it is mandatory that the axle wrap liner be replaced.
- Liner Crack Criteria:

  It is possible for the axle wrap liner to crack during service. If the liner is cracked and all the pieces are intact it is not necessary to replace the liner. If the liner is broken out and there are pieces missing the liner must be replaced immediately, see Figure 7-16. See Axle Wrap replacement in the Component Replacement Section of this publication.

SHOCK ABSORBER INSPECTION

Hendrickson uses a long service life, premium shock absorber on all AIRTEK and SOFTEK suspensions. When the shock absorber replacement is necessary, Hendrickson recommends that the shock absorbers be replaced with identical Hendrickson Genuine parts for servicing. Failure to do so will affect the suspension performance, durability, and will void the warranty.

FIGURE 7-17

Inspection of the shock absorber can be performed by doing a heat test, and a visual inspection. For instructions on shock absorber replacement see the Component Replacement Section of this publication. It is not necessary to replace shock absorbers in pairs if one shock absorber requires replacement.

HEAT TEST

1. Drive the vehicle at moderate speeds on rough road for minimum of fifteen minutes.

WARNING

DO NOT GRAB THE SHOCK AS IT CAN POSSIBLY CAUSE PERSONAL INJURY.

2. Lightly touch the shock body carefully below the dust cover, see Figure 7-17.
3. Touch the frame to get an ambient reference. A warm shock absorber is acceptable, a cold shock absorber should be replaced.
4. To inspect for an internal failure, remove and shake the suspected shock. Listen for the sound of metal parts rattling inside. Rattling of metal parts can indicate that the shock has an internal failure.

VISUAL INSPECTION

Look for these potential problems when doing a visual inspection. Inspect the shock absorbers fully extended. Replace as necessary.

FIGURE 7-18

LEAKING VS. MISTING SHOCK VISUAL INSPECTION

The inspection must not be conducted after driving in wet weather or a vehicle wash; shocks need to be free from water. Many shocks are often misdiagnosed as failures. Misting is the process whereby very small amounts of shock fluid evaporate at a high operating temperature through the upper seal of the shock. When the "mist" reaches the cooler outside air, it condenses and forms a film on the outside of the shock body. Misting is perfectly normal and necessary function of the shock. The fluid which evaporates through the seal area helps to lubricate and prolong the life of the seal.

A shock that is truly leaking and needs to be replaced will show signs of fluid leaking in streams from the upper seal. These streams can easily be seen when the shock is fully extended, underneath the main body (dust cover) of the shock. Look for these potential problems when doing a visual inspection. Inspect the shock absorbers fully extended. Replace as necessary.

FIGURE 7-19

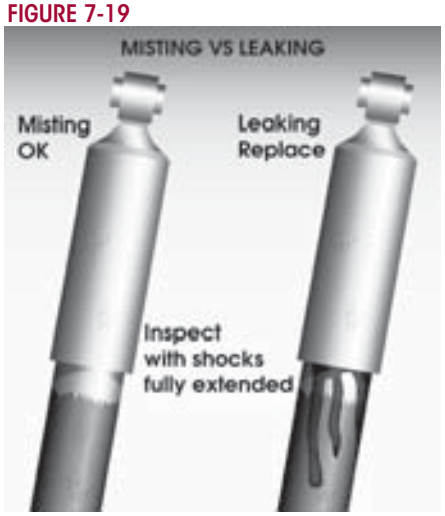

NOTE

The AIRTEK/SOFTEK suspension is equipped with a premium seal on the shock, however this seal will allow for misting to appear on the shock body (misting is not a leak and is considered acceptable).

If the shock is damaged, install a new shock absorber as detailed in the Component Replacement Section of this publication.

KINGPIN BUSHING INSPECTION

INSPECTION PROCEDURE (STEERING KNUCKLE LATERAL MOVEMENT)

1. Chock the wheels to help prevent the vehicle from moving. Set the parking brake.
2. Use a jack to raise the vehicle until the wheels are off the ground. Support the vehicle with safety stands.

FIGURE 7-20

FIGURE 7-21

3. **CHECKING THE UPPER KINGPIN BUSHING**. Install the base of a dial indicator onto the axle beam and face the tip against the steering knuckle, see Figure 7-20.
4. Set the dial indicator to "0" zero.
5. Move the top of the tire in and out by applying reasonable constant pressure and then release, see Figure 7-22.

FIGURE 7-22

6. Check the reading on the dial indicator. If the dial indicator moves more than 0.015", the upper bushing is worn or damaged. Replace both bushings. Refer to the Kingpin Bushing replacement procedure in the Component Replacement Section of this publication.
7. **CHECKING THE LOWER KINGPIN BUSHING**. Install a dial indicator so that the base is on the axle and the indicator tip is against the inside of the bottom of the knuckle, see Figure 7-21.
8. Set the dial indicator to "0" zero.
9. Move the bottom of the tire in and out. If the dial indicator moves more than 0.015", the lower bushing is worn or damaged. Replace both kingpin bushings. Refer to the Component Replacement Section of this publication.

NOTE If one bushing is worn or damaged, it is mandatory to replace both the top and bottom bushings on that knuckle assembly.

STEERING KNUCKLE INSPECTION

CHECKING VERTICAL END PLAY (UP AND DOWN MOVEMENT)

The operating spec for vertical clearance on the steering knuckle is 0.008" to 0.030".

1. Chock the rear tires to help prevent the vehicle from moving.
2. Set the parking brakes.
3. Use a jack to raise the vehicle until both tires are 1" off the ground.

FIGURE 7-23

4. Place a dial indicator on each side of the axle as follows:
   a. Index the wheels slightly (left or right).
   b. Place the magnetic dial indicator base on the axle, see Figure 7-23.
   c. Place the tip of the dial indicator on the top of the upper steering knuckle (not on the grease cap).
5. Set the dial indicator to "0" (zero).
6. Lower the jack.
7. If vertical clearance is greater than 0.030", adjust the upper knuckle to obtain clearance specifications, if adjustment does not achieve clearance specification, install shims (Hendrickson part no. 60259-002) between the top of the axle and the bottom of the upper steering knuckle to obtain the proper clearance specification. See Steering Knuckle Assembly in the Component Replacement Section of this publication for proper shim installation.
8. If vertical clearance is below 0.008", adjust the upper steering knuckle to obtain the proper clearance specification, if adjustment does not achieve clearance specification, remove shims. See Steering Knuckle Assembly in the Component Replacement Section of this publication for proper shim removal.

SHACKLE THRUST WASHER INSPECTION (If Equipped)

NOTE SOFTEK Vision 8K capacity vehicles built after 02/2007, and all other vehicles built after 11/2006 are not equipped with shackle thrust washers.

In normal use these components will function satisfactorily, even though the components may show some wear.

FIGURE 7-24

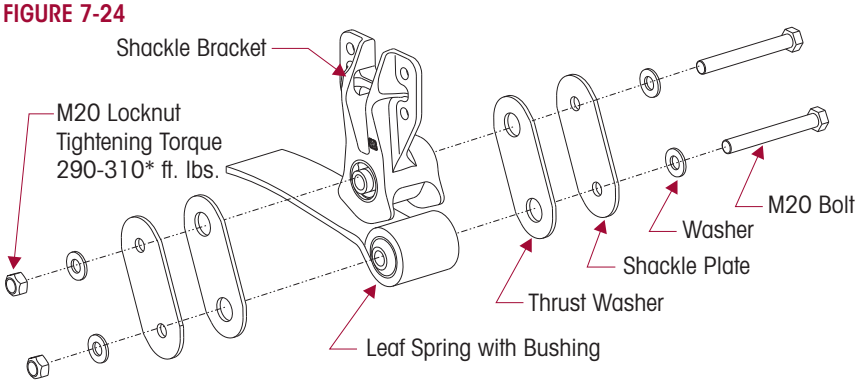

*Specification provided, controlled and subject to change by vehicle manufacturer.

An indication that the shackle thrust washers are worn, or need replacement is when the suspension exhibits one or more of the following conditions:

1. Excessive lateral movement of the spring.
2. The rear spring eye and or thrust washers are in contact with the shackle plates.
3. Normal and unacceptable thickness of the thrust washers (See Figure 7-24) can be measured with a micrometer or a ruler.
   - The normal thickness of a new thrust washer is 3⁄16" (0.187").
   - The minimum thickness allowable for a thrust washer is 3⁄32" (0.090").
   - If one or more of these conditions is experienced, disassembly of the rear shackle assembly is required to replace the thrust washers.
   - If one thrust washer is worn out, Hendrickson recommends both thrust washers on that side of the suspension be replaced. Inspect the thrust washers on the other side of the vehicle and replace if necessary. See Shackle Thrust Washer replacement procedure in the Component Replacement Section of this publication.

FRONT HANGER/REAR SHACKLE BRACKET SURFACE PAINT WEAR

The Hendrickson front suspension systems AIRTEK and SOFTEK equipped on Blue Bird buses, utilize rubber bushings in the leaf springs. These rubber bushings allow the leaf spring to deflect and contact the front hanger and shackle plates when the bus encounters high lateral acceleration (e.g. a highway clover leaf). The rubber bushing will center the leaf spring between the legs of the hanger/shackle plates once the vehicle is driven straight.

This function of the rubber bushing may allow the leaf spring to contact the front hanger/rear shackle plate and possibly remove surface paint from the contact area. Surface paint wear does not cause damage that will affect the function or durability of the front hanger/rear shackle plate or their mating components provided a minimum wall thickness is maintained.

FIGURE 7-25

AIRTEK - 10K

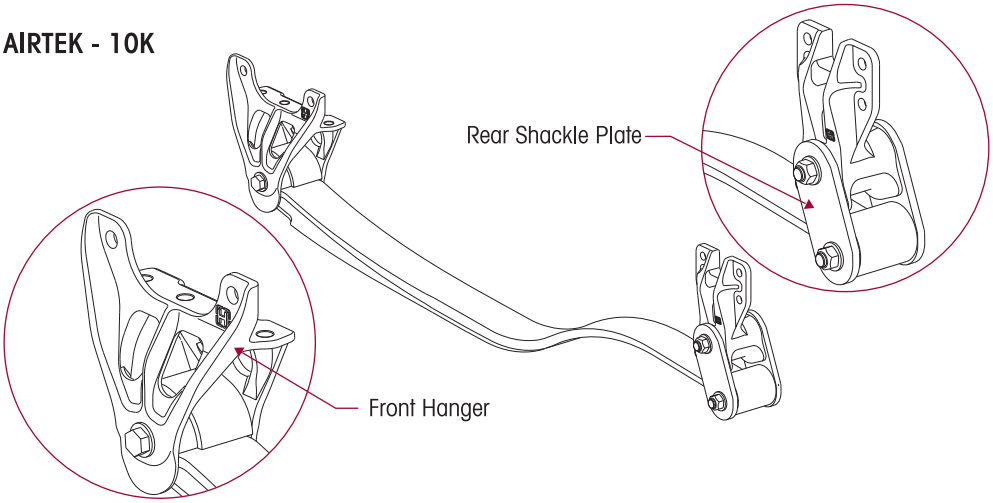

An indication that the front hanger/ rear shackle plates are worn and require replacement is when the components no longer meet the following minimum requirements:

- Front hanger inboard leg minimum thickness of 9.15 mm and the outboard leg thickness minimum thickness 11.00 mm, see Figure 7-26.
- Rear shackle plate minimum thickness of 5.8 mm, see Figure 7-26.

FIGURE 7-26

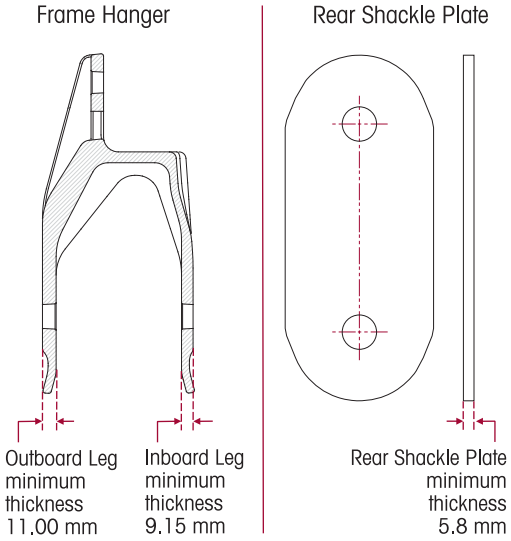

SECTION 8
Alignment & Adjustments

ALIGNMENT DEFINITIONS

FIGURE 8-1

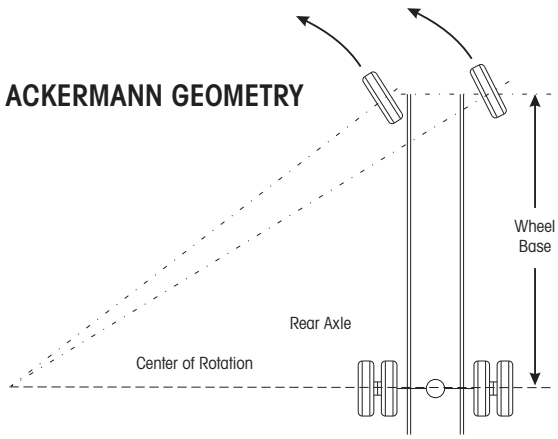

Ackermann Steering Geometry — The geometry of the four bar linkage consisting of the front axle beam pivot points, tie rod arms, and cross tube and attempts to provide free rolling of front tires in a turn. Ackermann geometry is dependent upon the steering axle track-width and wheelbase of the vehicle. Improper geometry results in wheel scrub in turns which generally appears as toe wear on the tire. Usually more wear is present on one side of the vehicle than the other due to the operational route of the vehicle.

Bump Steer (Feedback) — The feedback felt through the steering linkage to the steering wheel when a steer axle tire hits a bump in the road. This occurs because the axle-end of the drag link and the axle attachment point of the spring do not travel in parallel circular arcs as the suspension moves up and down. This condition can also be caused by trapped air in the power steering system.

FIGURE 8-2

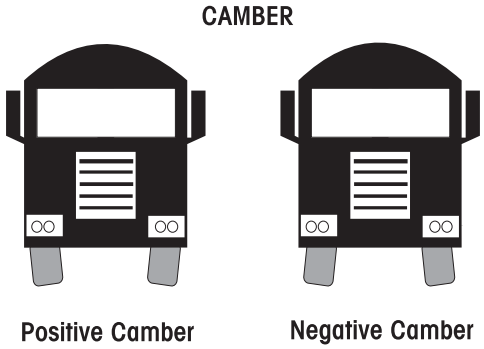

Camber — The angle formed by the inward or outward tilt of the wheel reference to a vertical line. Camber is positive when the wheel is tilted outward at the top and is negative when the wheel is tilted inward at the top.

Excessive positive camber may cause smooth wear on the outer half of the tire tread. Excessive negative camber may cause wear on the inner half of the tread. Static-unloaded camber angles are built into the axle to put the loaded tire perpendicular to the road.

FIGURE 8-3

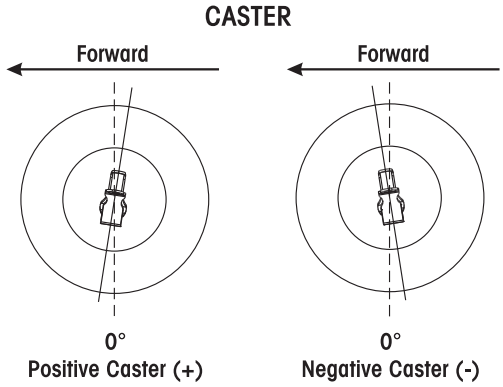

Caster — The forward or rearward tilt of the steering axle kingpin in reference to a vertical line. The angle is measured in degrees. Caster is positive when the top of the steering axis is titled rearward and is negative when the tilt is forward. Proper caster is important for directional stability and return ability. Too much positive caster can cause shimmy, excessive steering effort and is normally a vehicle performance and handling consideration. Uneven positive caster may create a steering pull toward the side with the lower caster. This attribute may be used to compensate for crowned roads.

FIGURE 8-4

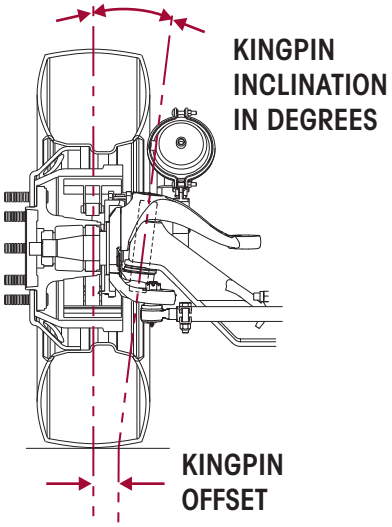

Kingpin Inclination (KPI) — The inward tilt of the kingpin from the vertical. This front suspension parameter has a pronounced effect on steering effort and return ability. As the front wheels are turned around an inclined kingpin, the front of the truck is lifted. This lifting of the vehicle is experienced as steering effort when the turn is executed and exhibits itself as recovery force when the steering wheel is released.

Kingpin Offset — The distance between the center of the tire patch and intersection of the kingpin axis with the ground. This parameter of front end geometry is important in vehicles without power steering and has a major effect on static steering. If there is no kingpin offset, the tires must scrub around the center of the pin patch when turned in a static condition, resulting in higher static steering efforts.

Steering Arm — The component that connects the drag link to the axle knuckle assembly.

FIGURE 8-5

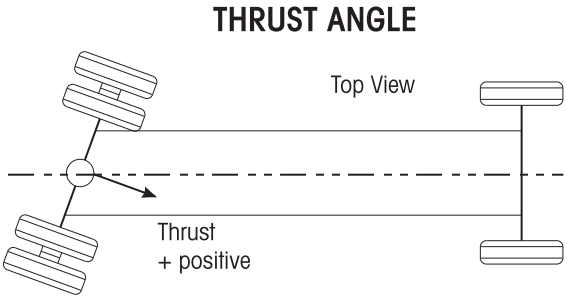

Thrust Angle, Tracking, or Square — The angle formed by the centerline of the vehicle frame (geometric centerline) and the direction that an axle points. As indicated by the term "square", the ideal value for the angle is 0° or when the axle centerline is at 90° or perpendicular to the geometric centerline. Thrust or tracking to the right is positive, and to the left is negative.

A steering correction is required to offset the effect of the thrust angles and keeps the vehicle traveling in a straight line. It results in a lateral offset between the steer and drive axle tires commonly referred to as "dog tracking."

Tie Rod Arm (Ackermann-Arm, Cross Tube Arm) — The component that transmits steering forces between left and right axle knuckle assemblies through the cross tube assembly.

FIGURE 8-6

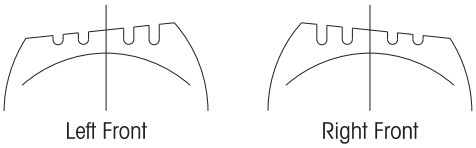

TOE-IN

Toe-in — is when the horizontal line intersects in front of the wheels, or the wheels are closer together in front than in the back. Toe-in is commonly designated as positive, toe-out as negative. Excessive toe-in wears the outside edge of the tires. Steer axle toe is adjustable to reduce wear to the leading edge of the tire and also to avoid road wander. Toe is adjusted in a static, unloaded condition so that the tires will run in a straight line under a dynamic, loaded condition.

FIGURE 8-7

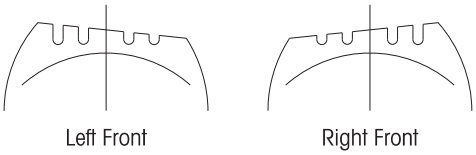

TOE-OUT

Toe-out — Is when the horizontal lines intersect behind the wheels, or the wheels are closer together in back than in front. Toe-in is commonly designated as positive, toe-out as negative. Excessive toe-out wears the inside edge of the tires. Steer axle toe is adjustable to reduce wear to the leading edge of the tire and also to avoid road wander. Toe is adjusted in a static, unloaded condition so that the tires will run in a straight line under a dynamic, loaded condition.

Toe-Out on Turns — (See Ackermann Geometry). Excessive turning angles such as those encountered in pickup and delivery operations may contribute to premature tire wear. Be advised that the greater the turning angles, the more that toe and camber change. If you have any doubt regarding the optimum turning angles for your operation, contact the vehicle's manufacturer, axle OEM, tire OEM and alignment equipment manufacturer for advice.

Total Toe — The angle formed by two horizontal lines through the planes of two wheels. Steer axle toe Is adjustable to reduce wear to the leading edge of the tire and also to avoid road wander. Toe is adjusted in a static, unloaded condition so that the tires will run in a straight line under a dynamic, loaded condition.

FIGURE 8-8

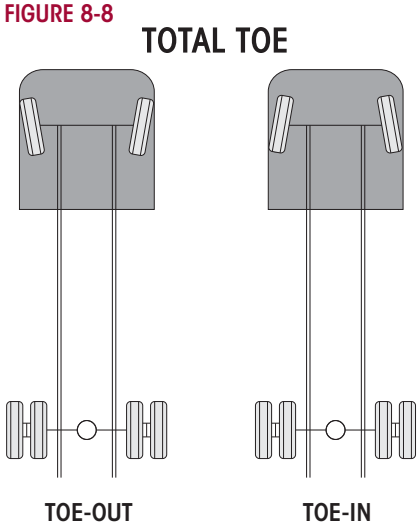

INSPECTION PRIOR TO ALIGNMENT

WHEELS AND TIRES

Examine the following items:

- The tires are inflated to the manufacturer's specified tire pressure.
- The steer axle tires are the same size and type.
- The lug nuts are tightened to manufacturer's specified torque.
- The wheels are balanced and check for tire to rim runout.
- The wheels and tires are free of excessive wear and damage.
- Wheel bearing end play is within OEM specification.

FRONT SUSPENSION

Inspect the following:

- All fasteners are installed and tightened to the specified torque. See Torque Specification Section in the appendix of this publication.
- Leaf springs are free of wear or damage.
- Air springs are free of wear or damage (if equipped).
- Shock absorbers are free of wear and damage.
- Vehicle ride height for both the front and rear are within specification. Follow manufacturer's guidelines (if equipped).
- Front and rear spring mounts for wear or damage.

INSPECT TIE ROD ENDS

Perform the "Tie Rod Inspection" procedure, refer to the Preventive Maintenance Section of this publication.

REAR AXLE AND REAR SUSPENSION

Rear axle misalignment can cause front tire wear. If the outer edge of one front tire is worn and the inner edge of the other front tire is worn, check the following:

- Make sure the rear axle (especially a tandem axle) is correctly aligned. Refer to the procedure from the manufacturer of the vehicle or the suspension.
- All fasteners including U-bolts (if applicable) are installed and tightened to the specified torque.
- The leaf springs are not worn or damaged.
- The bushings in the leaf springs are not worn or damaged.
- The torque rods (if used) are correctly adjusted (if adjustable).
- The frame is not bent or twisted.
- Refer to any additional recommendations and specifications from the manufacturer of vehicle on rear axles and suspensions. Reference the TMC (The Technology & Maintenance Council) Guidelines for Total Vehicle Alignment.

FRONT WHEEL ALIGNMENT

Hendrickson recommends technicians review TMC's publication TMC (Technology & Maintenance Council) "Guidelines for Total Vehicle Alignment".

The AIRTEK/SOFTEK front wheel alignment specification can be found in the Appendix of this publication.

Check the total vehicle wheel alignment when the following occur:

- Every 80,000 to 100,000 miles, or 12-18 months (normal maintenance).
- When the vehicle does not steer correctly.
- To correct a tire wear condition.

For rear wheel alignment specifications and adjustment refer to the vehicle manufacturer.

The front wheel alignment specifications can be found in the Alignment Section of this publication. There are two types of front wheel alignment:

1. *Minor alignment* – a minor front wheel alignment is done **for all** normal maintenance conditions, see below.
2. *Major alignment* – a major alignment is done when uneven or excessive tire wear is evident, or response at the steering wheel is sluggish, or the need for major wheel alignment check and adjustment is required, see below.

MINOR FRONT WHEEL ALIGNMENT

Perform the minor front wheel alignment in the following sequence:

1. Inspect all systems that affect wheel alignment. Refer to "Inspection Prior to Alignment" in this section.
2. Check the wheel bearing end play.
3. Check and adjust the vehicle ride height (for AIRTEK) as specified in the Preventive Maintenance Section of this publication.
4. Check toe-in and adjust if necessary.

MAJOR FRONT WHEEL ALIGNMENT

Be certain to follow wheel alignment inspection intervals as specified by the original equipment manufacturer. Before performing a major front wheel alignment it is recommended that alignment equipment calibration be checked to ensure proper vehicle alignment.

Major wheel alignment is accomplished in the following sequence of operation:

1. Inspect all the systems that influence the wheel alignment. Refer to the "Inspection Prior to Alignment" in this section.
2. Check and adjust the maximum turn angle, refer to the Steering Stop Adjustment Procedure in this section, see Figures 8-9 and 8-10.
3. If the vehicle is equipped with power steering, check the pressure relief in the power steering system and reset if necessary. Refer to vehicle manufacturer regarding the subject: Adjusting the Pressure Relief in the Power Steering System.
4. Verify the turning angle per Step 2, (toe-out during vehicle turns or the Ackermann angle). Refer to vehicle manufacturer's specifications.

FIGURE 8-9

FIGURE 8-10

5. Check the kingpin (or steering axis) inclination (the kingpin inclination is not adjustable). Refer to "Kingpin Inclination", in the Alignment Definitions in this section.
6. Check the camber angle. **DO NOT** attempt to adjust. Refer to "Camber" in the Alignment Definitions in this section.

WARNING

AXLE CAMBER IS NOT ADJUSTABLE. DO NOT CHANGE THE AXLE CAMBER ANGLE OR BEND THE AXLE BEAM. BENDING THE AXLE BEAM TO CHANGE THE CAMBER ANGLE CAN DAMAGE THE AXLE AND REDUCE AXLE STRENGTH, AND WILL VOID HENDRICKSON'S WARRANTY. A BENT AXLE BEAM CAN CAUSE LOSS OF VEHICLE CONTROL, POSSIBLY CAUSING PERSONAL INJURY OR PROPERTY DAMAGE, SEE FIGURE 8-11.

FIGURE 8-11

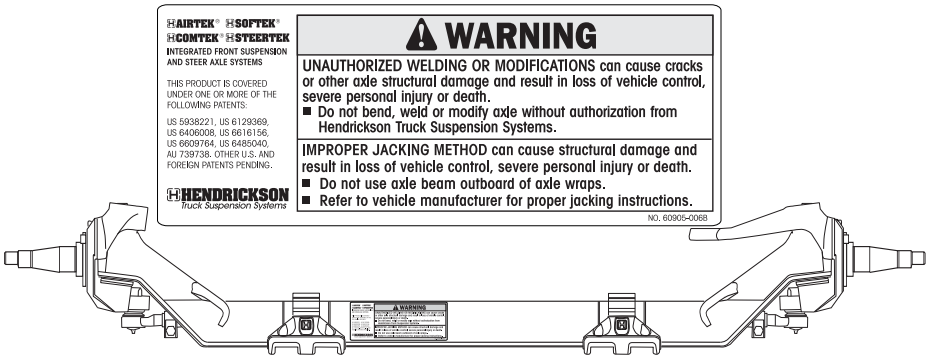

7. Check and adjust caster angle. Refer to "Caster" in the Alignment Definitions in this section. **The use of two different angle caster shims will not change cross caster.** Cross caster is the difference between the caster readings for left and right side of the vehicle.

SERVICE HINT

Prior to checking caster confirm that the vehicle is at its proper ride height front and rear. The front and rear ride height must be correct to achieve proper caster.

8. Check and adjust toe-in, refer to adjusting the Toe-In under the Alignment Definitions in this section.

AIRTEK RIDE HEIGHT ADJUSTMENT

1. Drive the vehicle onto a level surface.
2. Free and center all suspension joints by slowly moving vehicle back and forth several times without using the brakes. **It is important when coming to a complete stop to verify that the brakes are released.**
3. Chock front wheels.

NOTE

Hendrickson recommends the following be performed during any type of ride height adjustment to help prevent socket head cap screws from loosening from the height control valve housing, and any subsequent air leaks from the height control valve.

4. Prior to adjusting the height control valve, clean the threads of the ¼" valve mounting fasteners to remove any debris and corrosion.

WARNING

PRIOR TO AND DURING DEFLATION AND INFLATION OF THE FRONT AIR SUSPENSION SYSTEM, ENSURE THAT ALL PERSONNEL AND EQUIPMENT ARE CLEAR FROM UNDER THE VEHICLE AND AROUND THE SERVICE AREA, FAILURE TO DO SO CAN CAUSE SERIOUS PERSONAL INJURY, DEATH, OR PROPERTY DAMAGE.

5. See additional Air Spring Cautions and Warnings in the Important Safety Notice Section of this publication prior to inflating or deflating the suspension system.

SERVICE HINT

It is very important that the leveling valve be cycled completely before and after any ride height adjustments. This cycling of the leveling valve will help to make the adjustment as accurate as possible.

6. Detach the upper rubber grommet of the height control valve linkage from the upper stud and exhaust the suspension system air by lowering the height control valve linkage arm.
7. Re-attach the upper grommet of the height control valve linkage onto the upper stud to fill the suspension system with air. Wait until the airflow to front air springs has stopped.
8. Measure the suspension reference ride height on the shock absorber, see Figure 8-12 and, measuring from the center of the top mounting bolt to the center of the bottom mounting bolt.

FIGURE 8-12

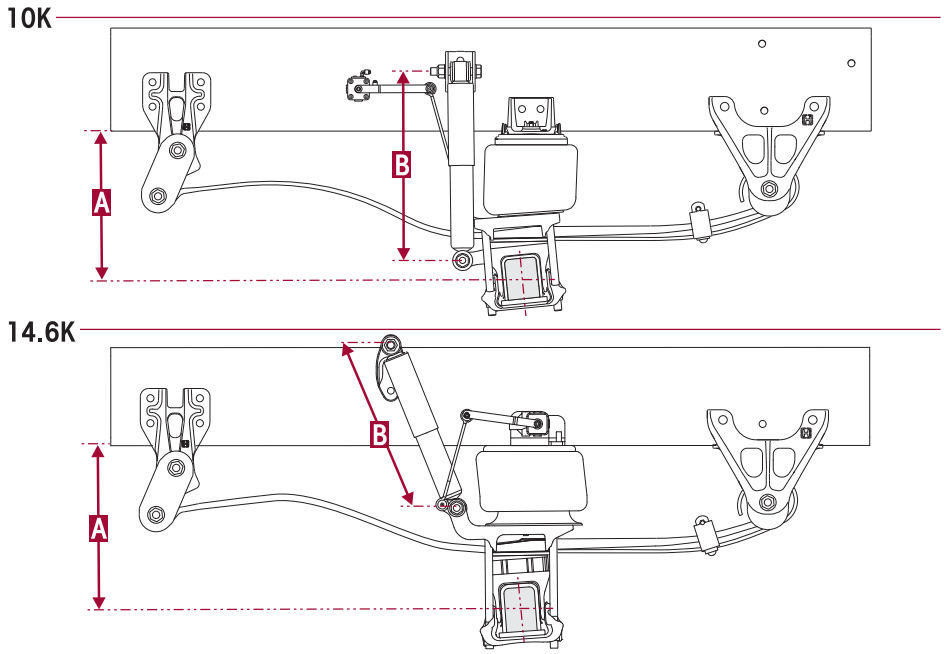

9. The different referenced ride height measurements are as specified, see Table 8-1. If the reference measurement is not within ± ¼" of the specification, the ride height **MUST** be adjusted.

TABLE 8-1

	AIRTEK (FRONT)		COMFORT AIR (REAR)	
	RIDE HEIGHT	SHOCK ABSORBER LENGTH	RIDE HEIGHT	SHOCK ABSORBER LENGTH
	Dimension A	Dimension B		
Blue Bird Model	From the bottom of the frame to the center of axle	At ride height with a tolerance of ¼"	From the bottom of the frame to the bottom of the main support member.	At ride height with a tolerance of ¼"
Vision 10K	12½"	18 9/16"	4⅞"	22¾"
All American Front Engine	14⅞"	17¼"		
All American Rear Engine	14⅞"	17 15/32"		

10. Detach the upper grommet of the height control valve linkage from the stud on the leveling valve arm and exhaust suspension system air, see Figure 8-13.
11. Adjust the height control valve by loosening the ¼" mounting locknuts and pivoting the valve body about the mounting bolt.

NOTE It is necessary to place a 3/16" Allen wrench in the head of the mounting bolts while adjusting ride height to prevent movement of the bolts, which can cause air leakage in the body of the leveling valve.

12. Facing the air spring from the outboard side of the vehicle, pivot the valve body clockwise to increase the ride height and counter clockwise to decrease the ride height.
13. Tighten the ¼" mounting locknuts to 8-10 foot pounds, (see Figure 8-13) and repeat Steps 4 through 10 until the reference measurement equals ± ¼" of the specification, see Figure 8-12.
14. Remove wheel chocks.

FIGURE 8-13

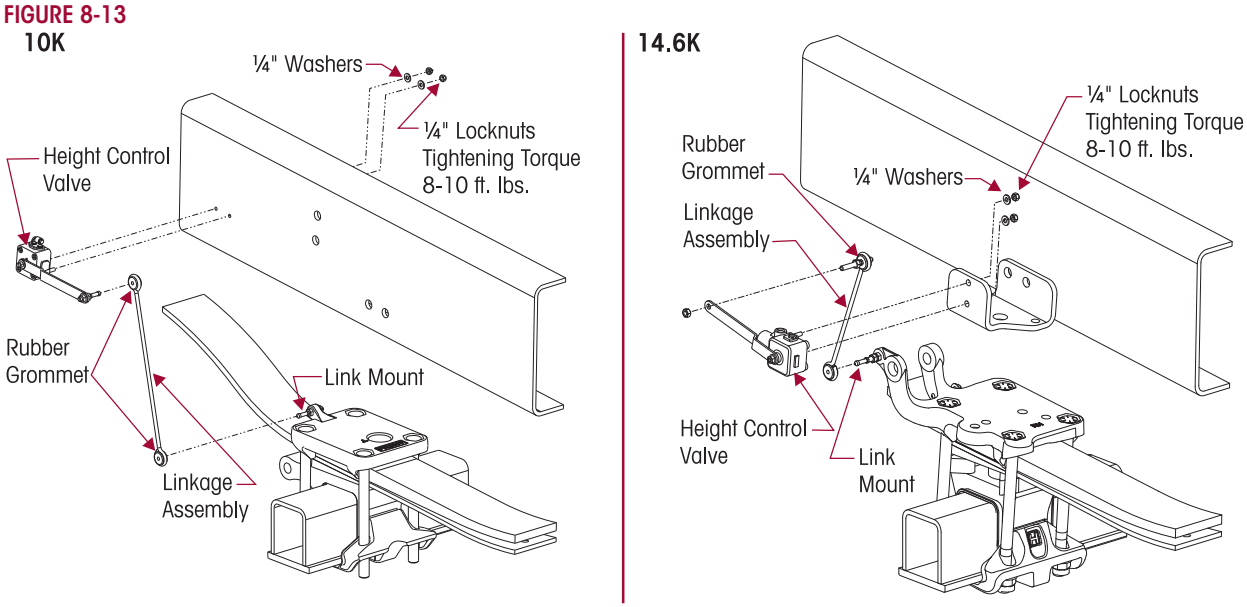

STEERING STOP

ADJUSTMENT PROCEDURE

When the axle or lower steering knuckle is replaced, the steering stop adjustment must be checked.

The steering stop adjustment procedure is as follows:

1. Drive truck onto turntables and chock the rear wheels.
2. Measure the wheel cut. The wheel cut is determined by steering the tires. Wheel cut is measured at the inside wheel only, therefore the tires must be turned to the full lock position for each right hand and left hand direction. Refer to the vehicle manufacturer for exact specifications.
3. Increase the wheel cut by loosening the jam nuts and screw the axle stops in clockwise.
4. Tighten the jam nuts.

FIGURE 8-14

NOTE It is very important that the sides of the square head axle stops are set parallel to the axle beam to ensure a good contact point on the axle, see Figure 8-14.

5. Decrease the wheel cut by loosening the jam nuts and screw the axle stops out counter-clock-wise.
6. Tighten the jam nuts to 40-60 foot pounds torque.
7. Measure the wheel cut and check for any interference with related steering components.

WARNING ALWAYS CHECK/RESET THE STEERING GEAR BOX POPPET WHEN THE WHEEL CUT IS DECREASED. FOLLOW MANUFACTURER'S GUIDELINES FOR THE GEAR BOX POPPET RESETTING PROCEDURE. FAILURE TO DO SO CAN RESULT IN PREMATURE FAILURE OF THE AXLE OR STEERING KNUCKLE. THIS CONDITION CAN CAUSE LOSS OF VEHICLE CONTROL, PERSONAL INJURY OR PROPERTY DAMAGE AND VOID WARRANTY.

TOE SETTING

1. Place the vehicle on a level floor with the wheels in a straight ahead position.
2. Raise the vehicle and support the front axle with jack stands.
3. Use paint and mark the center area of tread on both steer axle tires around the complete outer diameter of the tires.
4. Scribe a line through both steer axle tires in the painted area around the complete outer diameter of the tires.
5. Raise the vehicle and remove the jack stands.
6. Set the vehicle on the ground.

NOTE **DO NOT** measure toe-in with the front axle off the ground. The weight of the vehicle must be on the front axle when toe-in is measured.

7. Use a trammel bar and measure the distance between the scribe marks at the rear of the steer axle tires. Record the measurement.
8. Install the trammel bar and measure the distance between the scribe marks at the front of the steer axle tires. Record the measurement, see Figure 8-15.

NOTE When setting up the trammel bar the pointers should be level with the spindles at the front and rear of the steer axle tires.

9. To calculate the toe setting subtract the front measurement from the rear measurement, the difference between the two will equal the toe-in/toe-out measurement.

FIGURE 8-15

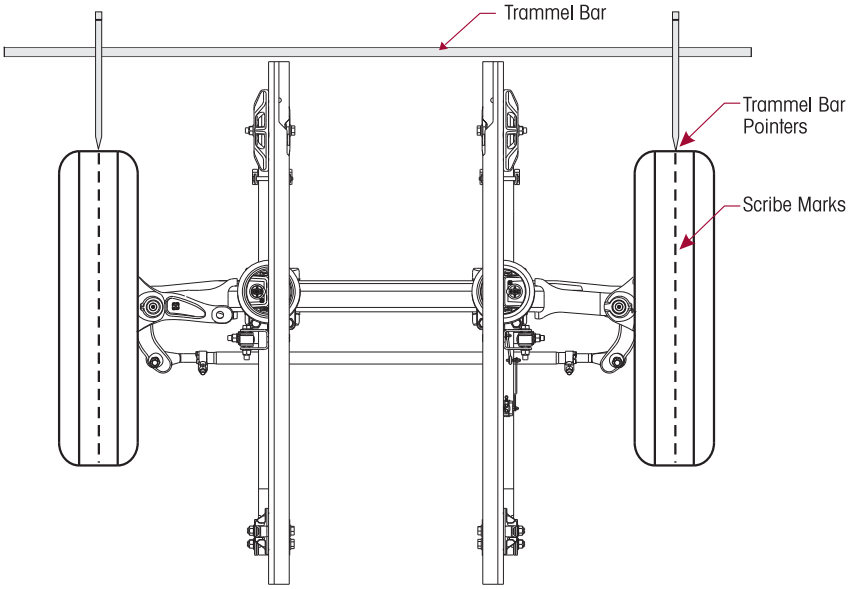

10. If the toe measurement is not within the specifications of 1/16" ± 1/32" (0.060" ± 0.030"), it will be necessary to adjust the toe setting. Refer to the following procedure.
    a. Loosen the tie rod cross tube clamp bolts and locknuts.
    b. Turn the tie rod cross tube until the specified toe-in distance is achieved.

WARNING

THE THREADED PORTION OF THE TIE ROD END MUST EXTEND PAST THE SLOTS INTO THE TIE ROD CROSS TUBE, SEE FIGURE 8-16. FAILURE TO DO SO CAN CAUSE COMPONENT TO FAIL CAUSING LOSS OF VEHICLE CONTROL AND POSSIBLE PERSONAL INJURY OR PROPERTY DAMAGE.

    c. Tighten the bolt and locknut on the tie rod cross tube to 60-75 foot pounds torque.

FIGURE 8-16

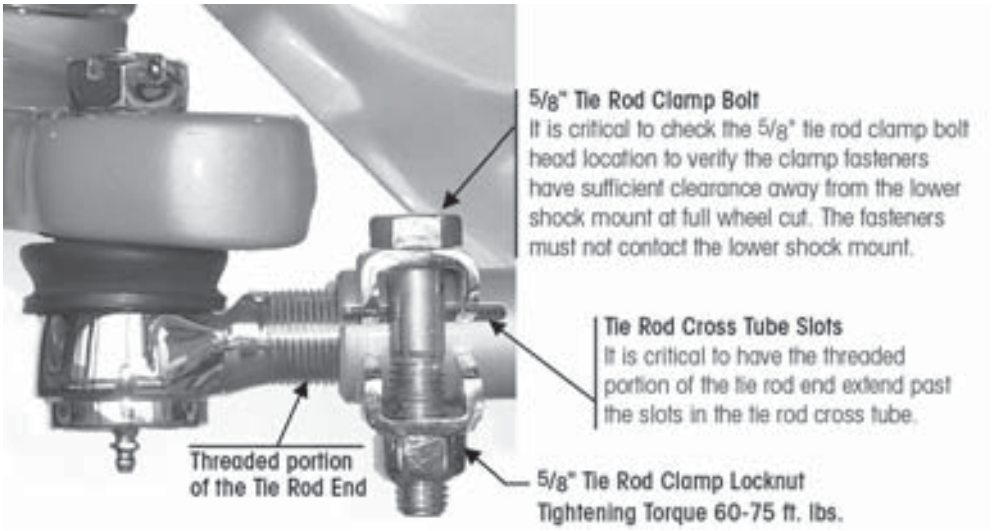

WARNING

THE THREADED PORTION OF THE TIE ROD END MUST EXTEND PAST THE SLOTS INTO THE TIE ROD IT IS CRITICAL TO CHECK THE 5/8" TIE ROD CLAMP BOLT HEAD LOCATION TO VERIFY THE CLAMP FASTENERS HAVE SUFFICIENT CLEARANCE AWAY FROM THE LOWER SHOCK MOUNT AT FULL WHEEL CUT. THE FASTENERS MUST NOT CONTACT THE LOWER SHOCK MOUNT. FAILURE TO DO SO CAN CAUSE ONE OR MORE COMPONENTS TO FAIL CAUSING LOSS OF VEHICLE CONTROL AND POSSIBLE PERSONAL INJURY OR PROPERTY DAMAGE.

11. Verify the ⅝" tie rod clamp bolt head does not contact the lower shock mount at full wheel cut, see Figure 8-16.
12. Repeat Steps 1-10 until the correct toe setting is achieved.

SPRING EYE RE-TORQUE

This procedure to re-torque is necessary when replacing

- Front Hanger
- Shackle Assembly
- Steel Leaf Spring Assembly

AIRTEK RE-TORQUE PROCEDURE

FIGURE 8-17

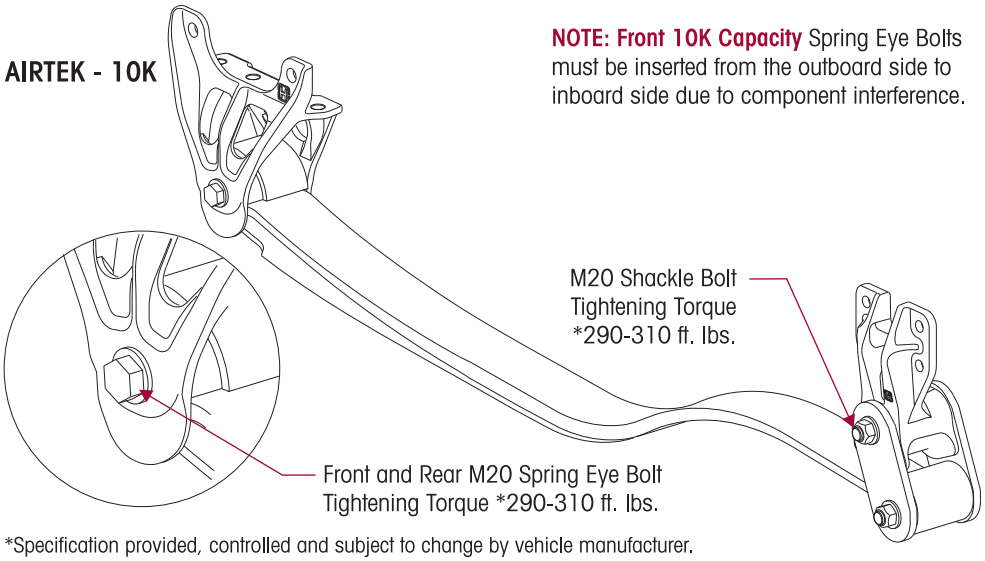

*Specification provided, controlled and subject to change by vehicle manufacturer.

1. Chock the rear wheels of the vehicle to prevent movement.
2. Verify ride height. Adjust if necessary, see AIRTEK Ride Height adjustment procedure in this section.
3. Loosen all six (6) front and rear spring eye bolts, see Figure 8-17.

NOTE **DO NOT** remove the spring eye bolts.

4. Let the suspension settle.
5. Tighten the front M20 spring eye bolt locknuts to vehicle manufacturer's specifications.
6. Tighten the rear M20 spring eye bolt and shackle bolt locknuts to vehicle manufacturer's specifications.
7. Affix a straight edge to the bottom of the frame rail in front of the air spring, see Figure 8-18.
8. With the vehicle on a level surface measure the distance from the top of the straight edge to the ground on both sides of the vehicle and record the measurements.
9. Measure the difference from one side to the other.
10. Do a road test and repeat measurement Steps 7 to 9.
11. If the measurement is less than ⅜" the vehicle is level. If measurement is more than ⅜" contact Hendrickson Tech Services.

FIGURE 8-18

SOFTEK RE-TORQUE PROCEDURE

1. Chock the wheels.
2. Loosen all six (6) front and rear spring eye bolts, see Figure 8-19.

NOTE **DO NOT** remove the spring eye bolts.

3. Let the suspension settle.
4. Tighten the front M20 spring eye bolt locknuts to vehicle manufacturer's specifications.
5. Tighten the rear M20 spring eye bolt and shackle bolt locknuts to vehicle manufacturer's specifications.
6. Affix a straight edge to the bottom of the frame rail behind frame hanger, see Figure 8-18.
7. With the vehicle on a level surface measure the distance from the top of the straight edge to the ground on both sides of the vehicle and record the measurements.
8. Measure the difference from one side to the other.
9. Do a road test and repeat measurement Steps 7 to 9.
10. If the measurement is less than ⅜" the vehicle is level. If measurement is more than ⅜" contact Hendrickson Tech Services.

FIGURE 8-19

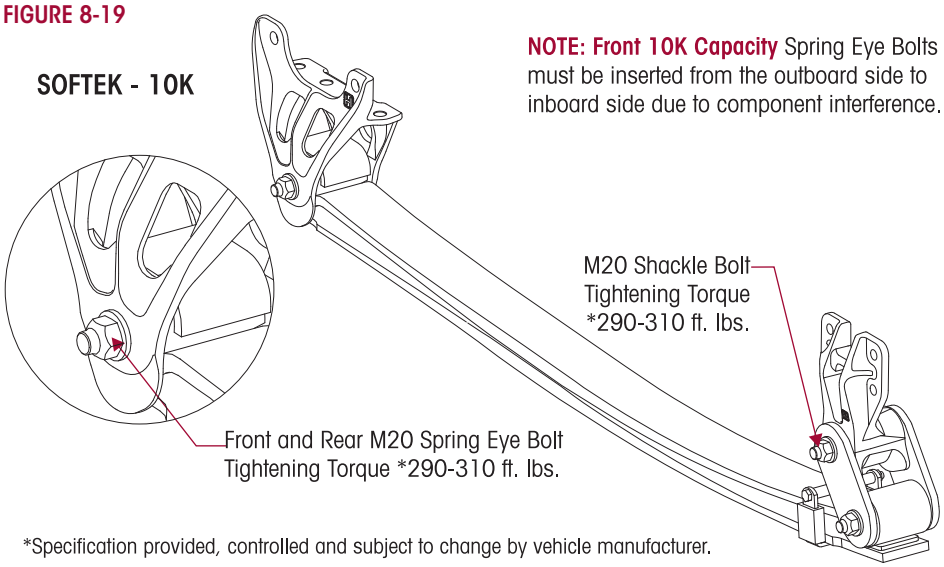

*Specification provided, controlled and subject to change by vehicle manufacturer.

SECTION 9

Component Replacement

FASTENERS

Hendrickson recommends that when servicing the vehicle to replace the removed fasteners with new equivalent fasteners. Maintain correct torque values at all times. Check torque values as specified. See Hendrickson's Torque Specifications in the Appendix of this publication. If non-Hendrickson fasteners are used follow torque specifications listed in the vehicle manufacturer's service manual.

SPACERS

There are different front axle spacer configurations for each front suspension system. Prior to disassembly of the front axle clamp group, note the orientation and quantity of the front axle spacer(s) (if equipped). It is required that the axle spacers be installed in the same orientation and location as removed to preserve the existing vertical alignment. Refer to the Parts List Section of this publication.

AIRTEK 10K – HEIGHT CONTROL VALVE

DISASSEMBLY

1. Drain the air from the secondary air tank.

WARNING

PRIOR TO AND DURING DEFLATION AND INFLATION OF THE FRONT AIR SUSPENSION SYSTEM, ENSURE THAT ALL PERSONNEL AND EQUIPMENT ARE CLEAR FROM UNDER THE VEHICLE AND AROUND THE SERVICE AREA, FAILURE TO DO SO CAN CAUSE SERIOUS PERSONAL INJURY, DEATH, OR PROPERTY DAMAGE.

2. See additional Air Spring Cautions and Warnings in the Important Safety Notice Section of this publication prior to inflating or deflating the suspension system.
3. Deflate the air springs by removing the height control valve linkage at the rubber grommet and lowering the height control linkage arm. This will exhaust the air pressure in the air springs.

CAUTION

THE PUSH-TO-CONNECT FITTINGS ARE NON-SERVICEABLE. IT IS NECESSARY TO CLEAN THE DIRT AND DEBRIS AWAY FROM THE PUSH-TO-CONNECT FITTINGS AND THE AIR LINES TO HELP PREVENT ANY FOREIGN MATERIAL FROM ENTERING THE AIR SPRING, AIR SYSTEM OR DAMAGING THE PUSH-TO-CONNECT FITTINGS. CLEAN PUSH-TO-CONNECT FITTINGS USING SOAPY WATER AND A SOFT BRISTLED BRUSH AND DRY WITH COMPRESSED AIR.

4. Remove the air lines from the height control valve, see Figure 9-1. The air lines are push-to-connect. Push in on the air line to release tension, push down on the collar and pull out the air line.
5. Remove the two ¼" mounting nuts and washers.
6. Remove the height control valve.

FIGURE 9-1 10K

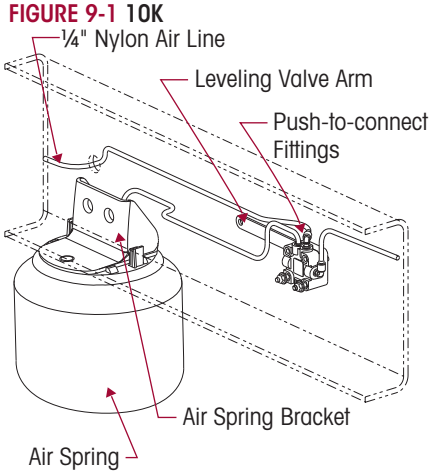

ASSEMBLY

1. Attach the height control valve on the vehicle frame as shown in Figure 9-1.

2. Attach the ¼" washers and the locknuts. **DO NOT** tighten the locknuts to specified torque until after the proper ride height is attained. Mount the height control valve parallel to flange of the frame, see Figure 9-2.

FIGURE 9-2 10K

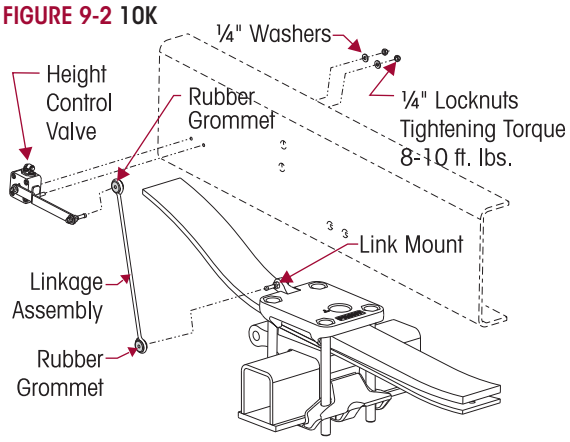

SERVICE HINT

When replacing or installing nylon air line tubing into quick-connect fittings, it is critical that the end of the air line is cut square. Improper cut of the end of the air line tubing can cause the air line to seat improperly in the quick connect fitting causing air leakage.

3. Attach the air lines to the height control valve, see Figure 9-3.
4. Install the height control valve linkage assembly.
5. Adjust the height control valve to proper specifications. See the Alignment & Adjustments Section of this publication for proper ride height adjustment.
6. Tighten the ¼" locknuts to 8-10 foot pounds torque.

FIGURE 9-3 10K

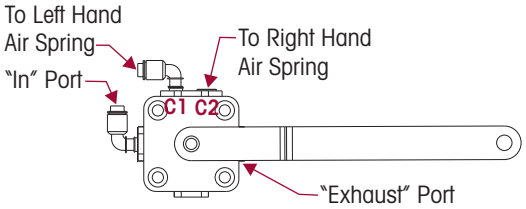

AIRTEK 14.6K – HEIGHT CONTROL VALVE

DISASSEMBLY

1. Drain the air from the secondary air tank.

WARNING

PRIOR TO AND DURING DEFLATION AND INFLATION OF THE FRONT AIR SUSPENSION SYSTEM, ENSURE THAT ALL PERSONNEL AND EQUIPMENT ARE CLEAR FROM UNDER THE VEHICLE AND AROUND THE SERVICE AREA, FAILURE TO DO SO CAN CAUSE SERIOUS PERSONAL INJURY, DEATH, OR PROPERTY DAMAGE.

2. See additional Air Spring Cautions and Warnings in the Important Safety Notice Section of this publication prior to inflating or deflating the suspension system.
3. Deflate the air springs by removing the height control valve linkage at the rubber grommet and lowering the height control linkage arm. This will exhaust the air pressure in the air springs.

CAUTION

THE PUSH-TO-CONNECT FITTINGS ARE NON-SERVICEABLE. IT IS NECESSARY TO CLEAN THE DIRT AND DEBRIS AWAY FROM THE PUSH-TO-CONNECT FITTINGS AND THE AIR LINES TO HELP PREVENT ANY FOREIGN MATERIAL FROM ENTERING THE AIR SPRING, AIR SYSTEM OR DAMAGING THE PUSH-TO-CONNECT FITTINGS. CLEAN PUSH-TO-CONNECT FITTINGS USING SOAPY WATER AND A SOFT BRISTLED BRUSH AND DRY WITH COMPRESSED AIR.

FIGURE 9-4 14.6K

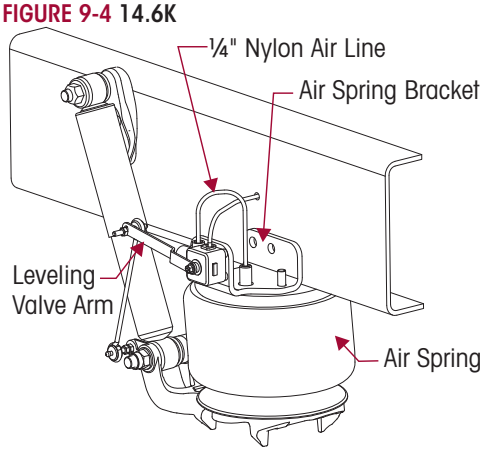

4. Remove the air lines from the height control valve, see Figure 9-4. The air lines are push-to-connect. Push in on the air line to release tension, push down on the collar and pull out the air line.
5. Remove the two ¼" mounting nuts and washers.
6. Remove the height control valve.

ASSEMBLY

1. Re-install the air fittings into the height control valve. Ensure the Teflon® thread sealing ring is seated around the base of the fitting's hex shoulder. Torque to 3-15 foot pounds (4-20 Nm).
2. Install the height control valve to the upper air spring bracket by attaching the ¼" washers and locknuts. Torque to 8-10 foot pounds, see Figure 9-5.

FIGURE 9-5 14.6K

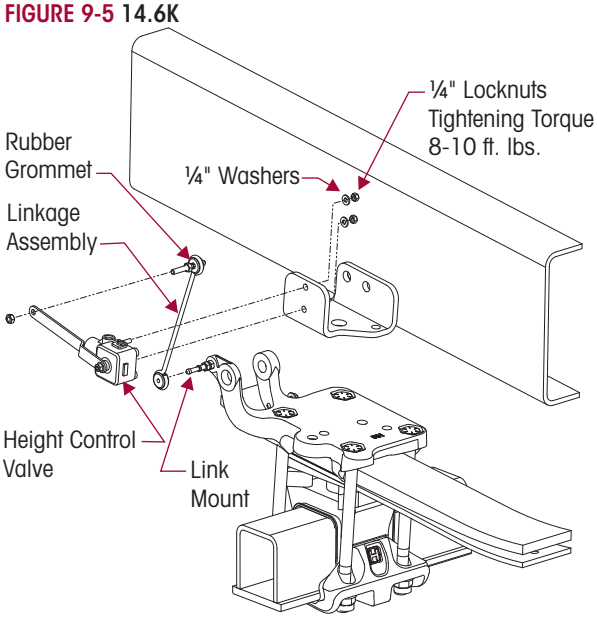

3. Install the air lines to the height control valve. Refer the Plumbing Diagram Section of this publication.
4. See additional Air Spring Cautions and Warnings in the Important Safety Notice Section of this publication prior to inflating or deflating the suspension system.
5. Inflate the suspension by connecting the height control valve linkage to the height control valve arm and lower mounting bracket. Verify the air springs inflate uniformly without binding.
6. Remove the frame supports.
7. Remove the wheel chocks.
8. Verify proper ride height adjustment, see ride height adjustment in the Alignment & Adjustments Section of this publication.

AIRTEK 10K – AIR SPRING

DISASSEMBLY

1. Place the vehicle on level floor.
2. Chock the wheels.
3. Raise the frame.
4. Support the vehicle with frame stands.

WARNING

WHEN SERVICING THE VEHICLE OR ATTACHING AN AIR SPRING AND THE VEHICLE IS ON THE GROUND, PRIOR TO AIRING THE SUSPENSION SYSTEM MAKE CERTAIN THE AIR SPRING LOCATOR IS INDEXED INTO THE UPPER AIR SPRING BRACKET PROPERLY, AND THE AIR SPRING IS FULLY SEATED ON THE SPRING TOP PAD. FAILURE TO FOLLOW THESE INSTRUCTIONS CAN RESULT IN PREMATURE AIR SPRING FAILURE, CAUSE PERSONAL INJURY, OR PROPERTY DAMAGE.

WARNING

PRIOR TO AND DURING DEFLATION AND INFLATION OF THE FRONT AIR SUSPENSION SYSTEM, ENSURE THAT ALL PERSONNEL AND EQUIPMENT ARE CLEAR FROM UNDER THE VEHICLE AND AROUND THE SERVICE AREA, FAILURE TO DO SO CAN CAUSE SERIOUS PERSONAL INJURY, DEATH, OR PROPERTY DAMAGE.

5. See additional Air Spring Cautions and Warnings in the Important Safety Notice Section of this publication prior to inflating or deflating the suspension system.
6. Remove the air from the air system by disconnecting the height control valve linkage at the rubber grommet of the height control valve arm and allow the arm to drop. This will exhaust air from the system.

WARNING

IF THE AIR SPRING IS TO BE RE-INSTALLED; INSPECT LOCK-TABS FOR DAMAGE OR CRACKS PRIOR TO RE-INSTALLATION. CARE MUST BE TAKEN TO REMOVE DIRT AND DEBRIS FROM THE PUSH-TO-CONNECT FITTING. FAILURE TO DO SO CAN RESULT IN THE PUSH-TO-CONNECT FITTING FAILING TO SEAL WITH THE AIR LINE.

7. Disconnect the air line to the air spring.
8. Raise the frame to allow for air spring removal.
9. Separate the air spring from the upper air spring bracket by applying downward pressure on air spring, see Figure 9-6, pushing outward on the lock-tabs outside the bracket, and inward on inlet lock-tabs. This will dislodge the air spring from the upper air spring bracket.
10. Apply upward pressure between the base of the air spring and the top pad. This will dislodge the air spring from the top pad, see Figure 9-7.
11. Remove the air spring.

FIGURE 9-6

FIGURE 9-7

ASSEMBLY

1. Insert the air spring into the top pad. Make sure the lock tabs click in place.
2. Compress the air spring and slide into vertical position. There is a locating nodule on the air spring to index the position in the upper air spring bracket.
3. Pull the air spring up into the upper air spring bracket until the air spring snaps into place in the upper air spring bracket. Verify all four lock-tabs are engaged, see Figure 9-8.

FIGURE 9-8

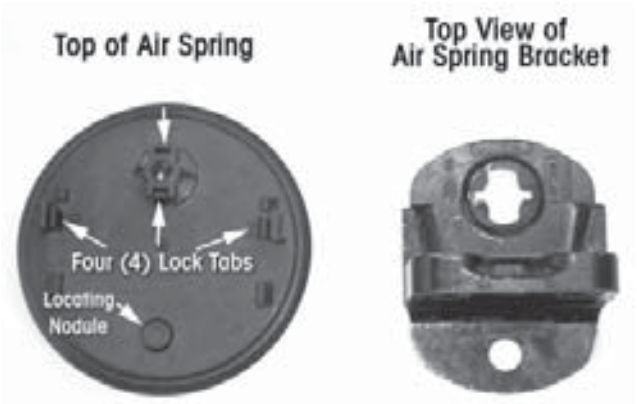

SERVICE HINT

When replacing or installing nylon air line tubing into quick-connect fittings it is critical that the end of the air line is cut square. Improper cut of the end of the air line tubing can cause the air line to seat improperly in the quick connect fitting causing air leakage.

4. Install the air line into the air spring.

WARNING

WHEN SERVICING THE VEHICLE OR ATTACHING AN AIR SPRING AND THE VEHICLE IS ON THE GROUND, PRIOR TO AIRING THE SUSPENSION SYSTEM MAKE CERTAIN THE AIR SPRING LOCATOR IS INDEXED INTO THE UPPER AIR SPRING BRACKET PROPERLY, AND THE AIR SPRING IS FULLY SEATED ON THE SPRING TOP PAD. FAILURE TO FOLLOW THESE INSTRUCTIONS CAN RESULT IN PREMATURE AIR SPRING FAILURE, CAUSE PERSONAL INJURY, OR PROPERTY DAMAGE.

5. See additional Air Spring Cautions and Warnings in the Important Safety Notice Section of this publication prior to inflating or deflating the suspension system.
6. Air up the suspension.
7. Check the air spring for leaks.
8. Check the ride height and adjust if necessary. See Alignment & Adjustments Section of this publication for the proper ride height adjustment.
9. Remove the wheel chocks.

AIRTEK 14.6K – AIR SPRING

DISASSEMBLY

1. Place the vehicle on level floor.
2. Chock the wheels.
3. Raise the frame.
4. Support the vehicle with frame stands.

WARNING

WHEN SERVICING THE VEHICLE OR ATTACHING AN AIR SPRING AND THE VEHICLE IS ON THE GROUND, PRIOR TO AIRING THE SUSPENSION SYSTEM MAKE CERTAIN THE AIR SPRING LOCATOR IS INDEXED INTO THE UPPER AIR SPRING BRACKET PROPERLY, AND THE AIR SPRING IS FULLY SEATED ON THE SPRING TOP PAD. FAILURE TO FOLLOW THESE INSTRUCTIONS CAN RESULT IN PREMATURE AIR SPRING FAILURE, CAUSE PERSONAL INJURY, OR PROPERTY DAMAGE.

WARNING

PRIOR TO AND DURING DEFLATION AND INFLATION OF THE FRONT AIR SUSPENSION SYSTEM, ENSURE THAT ALL PERSONNEL AND EQUIPMENT ARE CLEAR FROM UNDER THE VEHICLE AND AROUND THE SERVICE AREA, FAILURE TO DO SO CAN CAUSE SERIOUS PERSONAL INJURY, DEATH, OR PROPERTY DAMAGE.

5. See additional Air Spring Cautions and Warnings in the Important Safety Notice Section of this publication prior to inflating or deflating the suspension system.
6. Remove the air from the air system by disconnecting the height control valve linkage(s) at the rubber grommet(s) and allowing the lever(s) to drop. This will exhaust air from the system.
7. If the air spring is damaged and the suspension is deflated, it will be necessary to raise the frame and support the vehicle with frame stands to obtain adequate clearance for air spring removal.

8. Disconnect the ¼" NPT air fitting from the air spring.
9. Remove the lower ½" air spring locknut from the piston stud to remove the air spring from the top pad, see Figure 9-9.

FIGURE 9-9

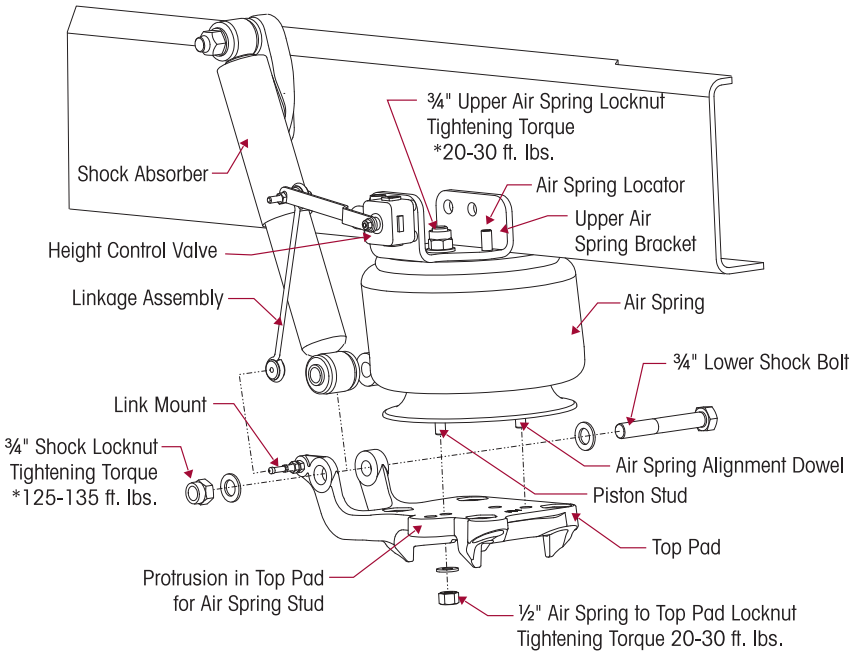

*Specification provided, controlled and subject to change by vehicle manufacturer.

10. Remove the ¾" upper air spring locknut from the air spring bracket.
11. Remove the air spring.

ASSEMBLY

1. Compress the air spring and slide into vertical position.
2. There is a locating ½" stud and ¾" threading stud on top of the air spring.
3. There are two studs on the bottom of the air spring. Guide studs through the air spring bracket and properly seat the lower air spring piston into the top axle pad. Secure the ½" locknut to the piston, see Figure 9-10.

FIGURE 9-10

Top View of Air Spring **Top View of Air Spring Bracket**

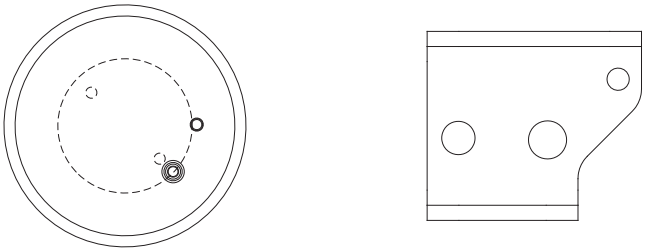

4. Tighten the ¾" upper air spring locknuts to vehicle manufacturer's specifications and the lower ½" lower air spring locknuts to 20-30 foot pounds.

WARNING

WHEN SERVICING THE VEHICLE OR ATTACHING AN AIR SPRING AND THE VEHICLE IS ON THE GROUND, PRIOR TO AIRING THE SUSPENSION SYSTEM MAKE CERTAIN THE AIR SPRING LOCATOR IS INDEXED INTO THE UPPER AIR SPRING BRACKET PROPERLY, AND THE AIR SPRING IS FULLY SEATED ON THE SPRING TOP PAD. FAILURE TO FOLLOW THESE INSTRUCTIONS CAN RESULT IN PREMATURE AIR SPRING FAILURE, CAUSE PERSONAL INJURY, OR PROPERTY DAMAGE.

5. See additional Air Spring Cautions and Warnings in the Important Safety Notice Section of this publication prior to inflating or deflating the suspension system.
6. Install the air line into the air spring.
7. Air up the suspension.
8. Check the air spring for leaks.
9. Check the ride height and adjust if necessary. See Alignment & Adjustments Section of this publication for the proper ride height adjustment.
10. Remove the wheel chocks.

AIRTEK FRONT LEAF SPRING FRAME HANGER

DISASSEMBLY

1. Place the vehicle on level floor.
2. Chock the wheels.
3. Raise the frame.
4. Support the vehicle with frame stands.
5. Suspend the front axle from the shock absorbers.

WARNING

PRIOR TO AND DURING DEFLATION AND INFLATION OF THE FRONT AIR SUSPENSION SYSTEM, ENSURE THAT ALL PERSONNEL AND EQUIPMENT ARE CLEAR FROM UNDER THE VEHICLE AND AROUND THE SERVICE AREA, FAILURE TO DO SO CAN CAUSE SERIOUS PERSONAL INJURY, DEATH, OR PROPERTY DAMAGE.

6. See additional Air Spring Cautions and Warnings in the Important Safety Notice Section of this publication prior to inflating or deflating the suspension system.
7. Deflate the air springs by removing the height control valve linkage and lowering the leveling valve arm. This will exhaust the air pressure in the air springs.
8. Remove the air lines from air springs.
9. Remove the M20 spring eye bolt, washers and locknut.

SERVICE HINT

A bottle jack may be required to raise the axle slightly to facilitate removal of the spring eye bolt.

10. Remove the frame mounting fasteners from the hanger. See manufacturer's guidelines.
11. Remove the hanger from the vehicle, see Figure 9-11.

FIGURE 9-11

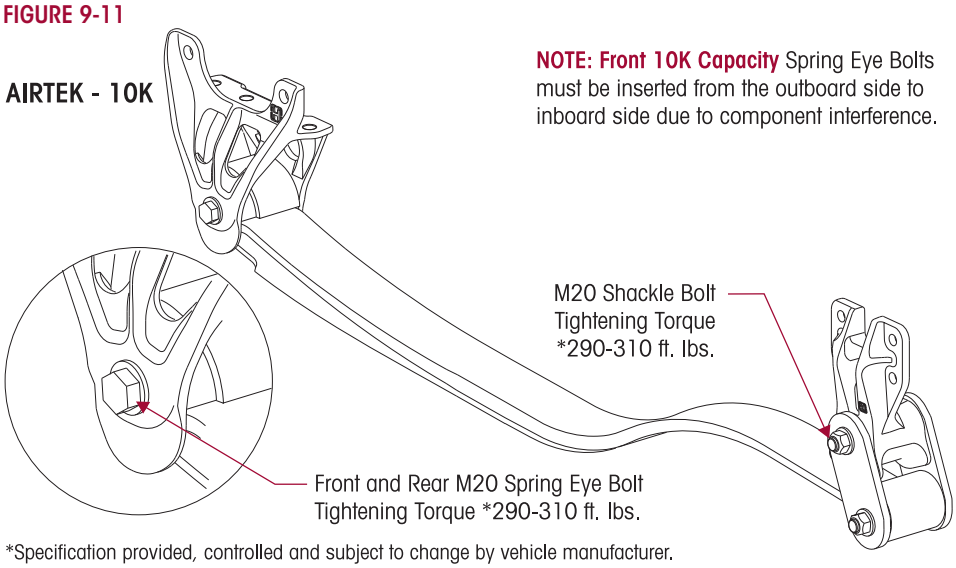

*Specification provided, controlled and subject to change by vehicle manufacturer.

ASSEMBLY

1. Install the new hanger on the frame.
2. Install new frame fasteners. Follow manufacturer's guidelines.
3. Install the new M20 spring eye bolt from the outboard side of the hanger (see Figure 9-11), washers and locknut.
4. Remove the frame stands and lower frame.
5. See additional Air Spring Cautions and Warnings in the Important Safety Notice Section of this publication prior to inflating or deflating the suspension system.
6. Install the air lines into the air springs.
7. Install the height control valve linkage and inflate the suspension to normal operating pressure.
8. Tighten M20 locknut to vehicle manufacturer's specifications.
9. Remove the wheel chocks.

SOFTEK FRONT LEAF SPRING FRAME HANGER

DISASSEMBLY

1. Place the vehicle on level floor.
2. Chock the wheels.
3. Raise the frame.
4. Support the vehicle with frame stands.
5. Suspend the front axle from the shocks.
6. Remove the M20 spring eye bolt, washers and locknut.

SERVICE HINT

A bottle jack may be required to raise the axle slightly to facilitate removal of the spring eye bolt.

7. Remove the frame mounting fasteners from the hanger. See manufacturer's guidelines.
8. Remove the hanger from the vehicle, see Figure 9-12.

FIGURE 9-12

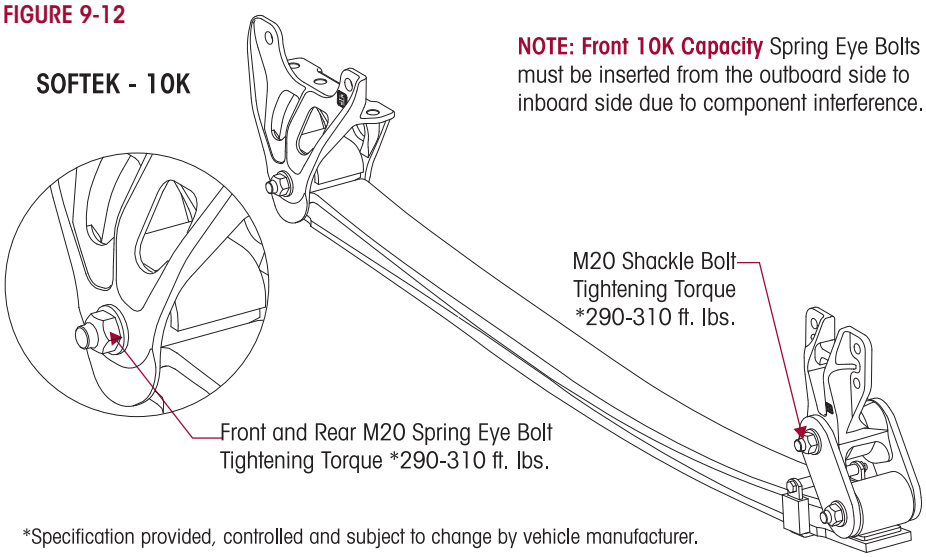

*Specification provided, controlled and subject to change by vehicle manufacturer.

ASSEMBLY

1. Install the new hanger on the frame.
2. Install new frame fasteners. Follow manufacturer's guidelines.
3. Install the new M20 spring eye bolt from the outboard side of the hanger (see Figure 9-12), washers and locknut.
4. Remove the frame stands and lower frame.
5. Tighten M20 shackle locknut to vehicle manufacturer's specifications.
6. Remove the wheel chocks.

AIRTEK REAR SHACKLE FRAME BRACKET

DISASSEMBLY

1. Place the vehicle on level floor.
2. Chock the wheels.
3. Raise the frame.
4. Support the vehicle with frame stands.
5. Suspend the front axle from the shocks.

WARNING

PRIOR TO AND DURING DEFLATION AND INFLATION OF THE FRONT AIR SUSPENSION SYSTEM, ENSURE THAT ALL PERSONNEL AND EQUIPMENT ARE CLEAR FROM UNDER THE VEHICLE AND AROUND THE SERVICE AREA, FAILURE TO DO SO CAN CAUSE SERIOUS PERSONAL INJURY, DEATH, OR PROPERTY DAMAGE.

6. See additional Air Spring Cautions and Warnings in the Important Safety Notice Section of this publication prior to inflating or deflating the suspension system.
7. Deflate the air springs by removing the height control valve linkage and lowering the leveling valve arm. This will exhaust the air pressure in the air springs.
8. Remove the air lines from air springs.
9. Remove the rear M20 spring eye and shackle pivot bolts, washers and locknuts.

SERVICE HINT

A bottle jack may be required to raise the axle slightly to facilitate removal of the rear spring eye bolt.

10. Remove the frame fasteners from the shackle bracket. See manufacturer's guidelines.
11. Remove the shackle bracket from the vehicle, see Figure 9-13.
12. Inspect the shackle assembly and both thrust washers (if equipped) for excessive wear or damage. See Thrust Washer Inspection in the Preventive Maintenance Section of this publication. Hendrickson recommends the thrust washers be replaced when this assembly is serviced.
13. If damaged or worn excessively, replace with Genuine Hendrickson Parts as detailed in the Component Replacement Section of this publication.

FIGURE 9-13

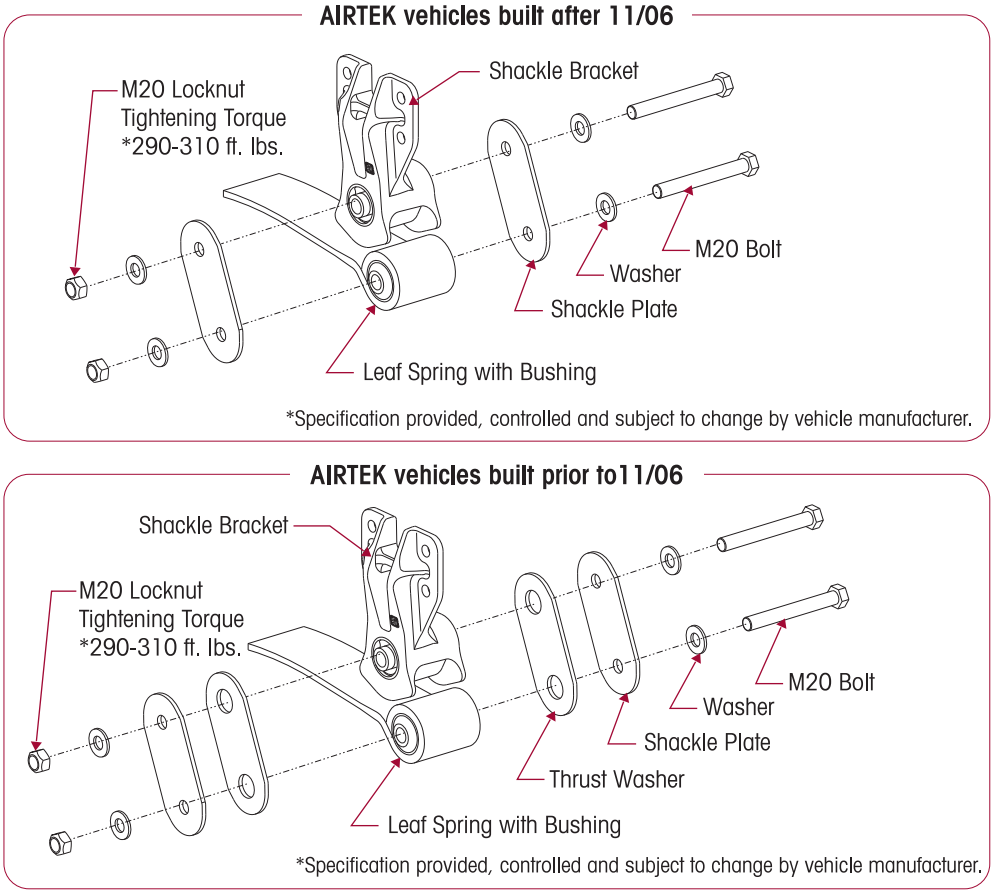

ASSEMBLY

1. Install the shackle bracket on the frame.
2. Install new frame fasteners. Follow manufacturer's guidelines.
3. Install the thrust washers (if equipped) and shackle plates with the M20 bolts, washers and locknuts. Snug the shackle bolts. **DO NOT** tighten.
4. Remove the frame stands and lower frame.
5. See additional Air Spring Cautions and Warnings in the Important Safety Notice Section of this publication prior to inflating or deflating the suspension system.
6. Install the air lines into the air springs.
7. Install the height control valve linkage and inflate the suspension to normal ride height.
8. Tighten M20 shackle locknuts to vehicle manufacturer's specifications, see Figure 9-13.
9. Remove the wheel chocks.

SOFTEK REAR SHACKLE BRACKET

DISASSEMBLY

1. Place the vehicle on level floor.
2. Chock the wheels.
3. Raise the frame.
4. Support the vehicle with frame stands.
5. Suspend the front axle from the shocks.

6. Remove the rear M20 spring eye and shackle pivot bolts, washers and locknuts.

SERVICE HINT

A bottle jack may be required to raise the axle slightly to facilitate removal of the rear spring eye bolt.

7. Remove the frame fasteners from the shackle bracket. See manufacturer's guidelines.
8. Remove the shackle bracket from the vehicle, see Figure 9-14.
9. Inspect the shackle assembly and both thrust washers (if equipped) for excessive wear or damage. See Thrust Washer Inspection in the Preventive Maintenance Section of this publication. Hendrickson recommends the thrust washers be replaced when this assembly is serviced.
10. If damaged or worn excessively, replace with Genuine Hendrickson Parts as detailed in the Component Replacement Section of this publication.

FIGURE 9-14

SOFTEK vehicles built after 11/06

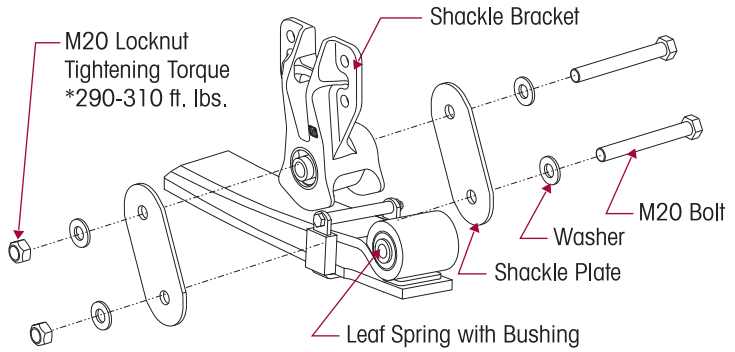

*Specification provided, controlled and subject to change by vehicle manufacturer.

SOFTEK vehicles built prior to11/06

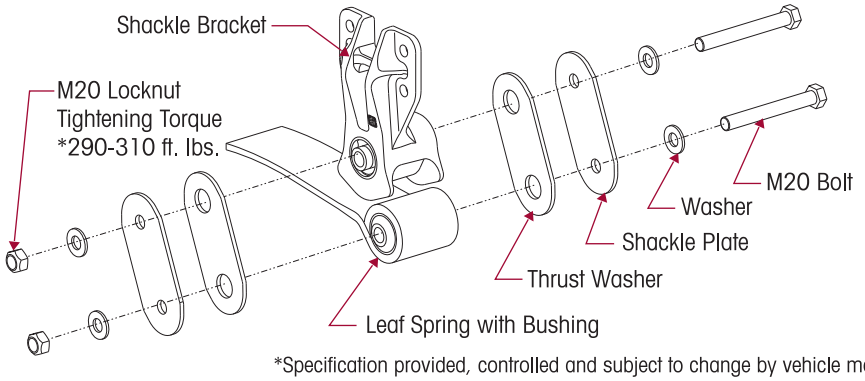

*Specification provided, controlled and subject to change by vehicle manufacturer.

ASSEMBLY

1. Install the shackle bracket on the frame.
2. Install new frame fasteners. Follow manufacturer's guidelines.
3. Install the thrust washers (if equipped) and shackle plates with the M20 bolts, washers and locknuts, see Figure 9-14.
4. Remove the frame stands and lower frame.
5. Tighten M20 locknuts to vehicle manufacturer's specifications.
6. Remove the wheel chocks.

SOFTEK RUBBER AXLE STOP

FIGURE 9-15

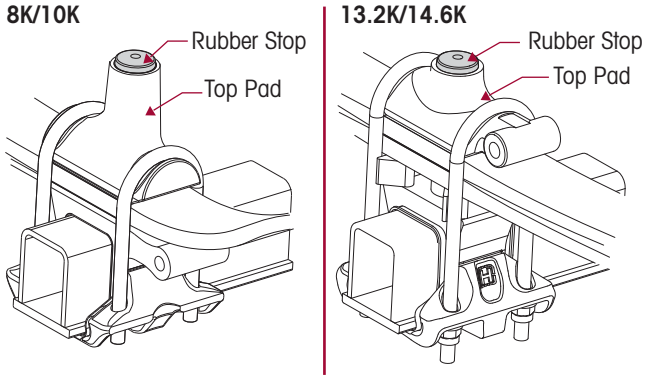

REMOVAL

1. Insert a small pry bar between the rubber stop and the inside of the top pad.
2. Apply downward force on the pry bar and pull the rubber stop out of the top pad, see Figure 9-15.
3. Inspect the top pad and frame rail flange for any contact damage.
4. Clean any debris from inside the top pad.

INSTALLATION

1. Lubricate the new rubber axle stop with soapy water.
2. Install the rubber axle stop in the top pad.
3. Apply downward force on the rubber axle stop until it is seated firmly in the top pad.

AIRTEK THRUST WASHERS (If equipped)

DISASSEMBLY

1. Place the vehicle on level floor.
2. Chock the wheels.
3. Raise the frame.
4. Support the vehicle with frame stands.

WARNING

PRIOR TO AND DURING DEFLATION AND INFLATION OF THE FRONT AIR SUSPENSION SYSTEM, ENSURE THAT ALL PERSONNEL AND EQUIPMENT ARE CLEAR FROM UNDER THE VEHICLE AND AROUND THE SERVICE AREA, FAILURE TO DO SO CAN CAUSE SERIOUS PERSONAL INJURY, DEATH, OR PROPERTY DAMAGE.

5. See additional Air Spring Cautions and Warnings in the Important Safety Notice Section of this publication prior to inflating or deflating the suspension system.
6. Deflate the air springs by removing the height control valve linkage and lowering the leveling valve arm. This will exhaust the air pressure in the air springs.
7. Suspend the front axle from the shocks.
8. Remove the M20 spring eye and shackle pivot bolts, washers and locknuts.
9. Remove the shackle plates and thrust washers (if equipped).

ASSEMBLY

1. Install the NEW thrust washers (if equipped) and shackle plates with the M20 bolts, washers and locknuts, see Figure 9-16.
2. Remove frame stands and lower frame.
3. See additional Air Spring Cautions and Warnings in the Important Safety Notice Section of this publication prior to inflating or deflating the suspension system.
4. Install air lines into the air springs.
5. Install the height control valve linkage and inflate the suspension to normal ride height.

6. Tighten M20 locknuts to vehicle manufacturer's specifications.
7. Remove the wheel chocks.

FIGURE 9-16
FOR VEHICLES BUILT PRIOR TO 11/06

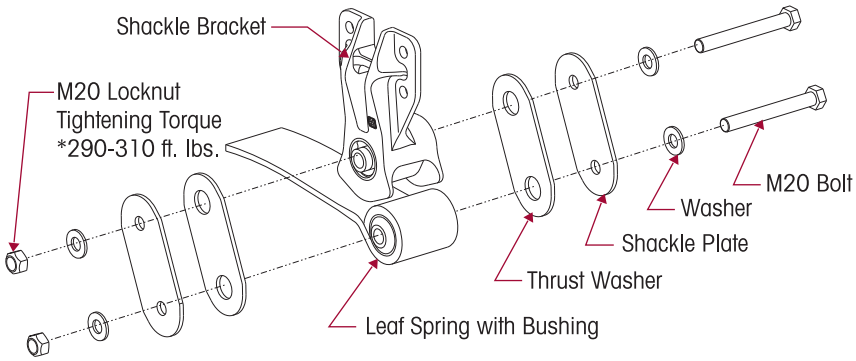

*Specification provided, controlled and subject to change by vehicle manufacturer.

SOFTEK THRUST WASHERS (If equipped)

DISASSEMBLY

1. Place the vehicle on level floor.
2. Chock the wheels.
3. Raise the frame.
4. Support the vehicle with frame stands.
5. Suspend the front axle from the shocks.
6. Remove the M20 spring eye and shackle pivot bolts, washers and locknuts.
7. Remove the shackle plates and thrust washers (if equipped).

ASSEMBLY

1. Install the NEW thrust washers (if equipped) and shackle plates with the M20 bolts, washers and locknuts, see Figure 9-16.
2. Remove frame stands and lower frame.
3. Tighten M20 locknuts to vehicle manufacturer's specifications.
4. Remove the wheel chocks.

AIRTEK LEAF SPRING ASSEMBLY

DISASSEMBLY

1. Place the vehicle on a level floor.
2. Chock the wheels.
3. Raise the frame.
4. Support the vehicle with frame stands.

FIGURE 9-17

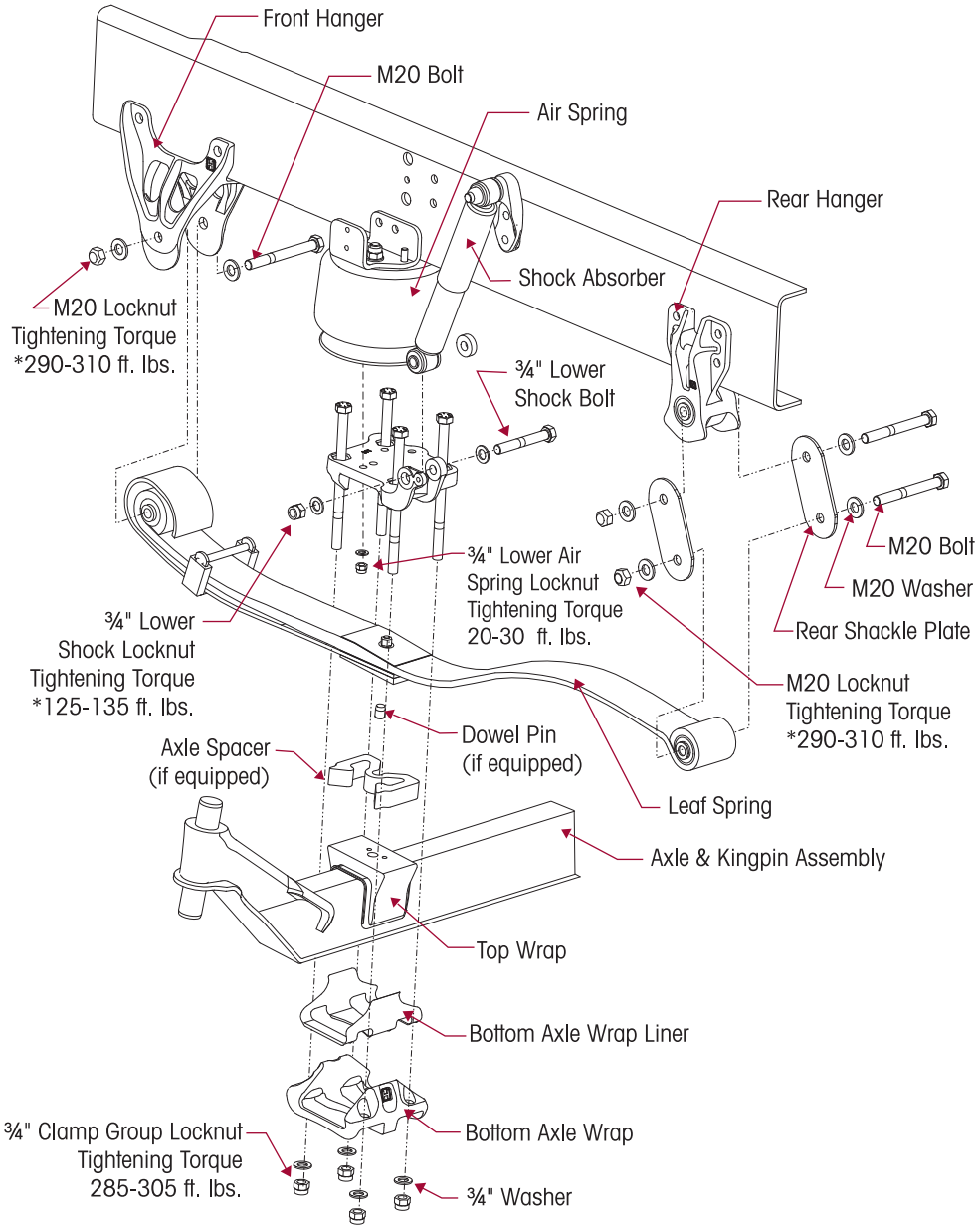

*Specification provided, controlled and subject to change by vehicle manufacturer.

WARNING

PRIOR TO AND DURING DEFLATION AND INFLATION OF THE FRONT AIR SUSPENSION SYSTEM, ENSURE THAT ALL PERSONNEL AND EQUIPMENT ARE CLEAR FROM UNDER THE VEHICLE AND AROUND THE SERVICE AREA, FAILURE TO DO SO CAN CAUSE SERIOUS PERSONAL INJURY, DEATH, OR PROPERTY DAMAGE.

5. See additional Air Spring Cautions and Warnings in the Important Safety Notice Section of this publication prior to inflating or deflating the suspension system.
6. Deflate the air springs by removing the height control valve linkage and lowering the height control valve arm. This will exhaust the air pressure in the air springs.

CAUTION

THE PUSH-TO-CONNECT FITTINGS ARE NON-SERVICEABLE. IT IS NECESSARY TO CLEAN THE DIRT AND DEBRIS AWAY FROM THE PUSH-TO-CONNECT FITTINGS AND THE AIR LINES TO HELP PREVENT ANY FOREIGN MATERIAL FROM ENTERING THE AIR SPRING, AIR SYSTEM OR DAMAGING THE PUSH-TO-CONNECT FITTINGS. CLEAN PUSH-TO-CONNECT FITTINGS USING SOAPY WATER AND A SOFT BRISTLED BRUSH AND DRY WITH COMPRESSED AIR.

7. Disconnect the air lines at the air springs.
8. Suspend the front axle to remove the load from leaf spring assembly.
9. Remove the air spring (see Air Spring disassembly in this section).
10. Remove the front and rear M20 spring eye bolts washer and locknuts. Loosen the M20 shackle pivot bolt.

SERVICE HINT

To ease in the removal of the spring eye bolts, it may be necessary to raise the axle slightly.

11. Remove the ¾" clamp group locknuts and discard.

WARNING

DO NOT USE A CUTTING TORCH TO REMOVE CLAMP GROUP BOLTS OR ATTACHING FASTENERS. THE USE OF SUCH HEAT ON SUSPENSION COMPONENTS CAN ADVERSELY AFFECT THE STRENGTH OF THESE PARTS. A COMPONENT DAMAGED IN THIS MANNER CAN RESULT IN THE LOSS OF VEHICLE CONTROL AND POSSIBLE PERSONAL INJURY OR PROPERTY DAMAGE.

SERVICE HINT

If a clamp group nut fails to come off bolt, cut half way through the bolt with an abrasive cut off wheel, taking care not to contact axle beam or other components. Using an impact wrench, spin the locknut to fracture the bolt and remove.

12. Remove the ¾" clamp group bolts, the top pad, galvanized liner and the bottom axle wrap and liner. Discard the clamp group bolts, see Figure 9-17.
13. Remove the spring assembly.

ASSEMBLY

1. Install the new spring and wrap leaf assembly on the axle. Verify the center bolt is located properly in the top axle wrap and spacer (if equipped), see Figure 9-17.
2. Install the new galvanized liner and the top pad onto the spring.
3. Remove and replace the bottom axle wrap liner located in bottom axle wrap.
4. Install the bottom axle wrap.
5. Install the new ¾" clamp group bolts, washers, and locknuts. New clamp group fasteners must be used when the clamp group is removed, to prevent premature bolt fatigue.
6. Snug the clamp group, **DO NOT** torque at this time.
7. Raise the axle and the spring assembly into the front hanger and rear shackle assembly.
8. Install the M20 spring eye bolts, washers and locknuts. Snug bolts. **DO NOT** tighten.
9. Ensure that the clamp group is properly aligned and the hex bolts are seated in the top pad, and the bottom axle wrap is centered with the top axle wrap, see Figure 9-18.

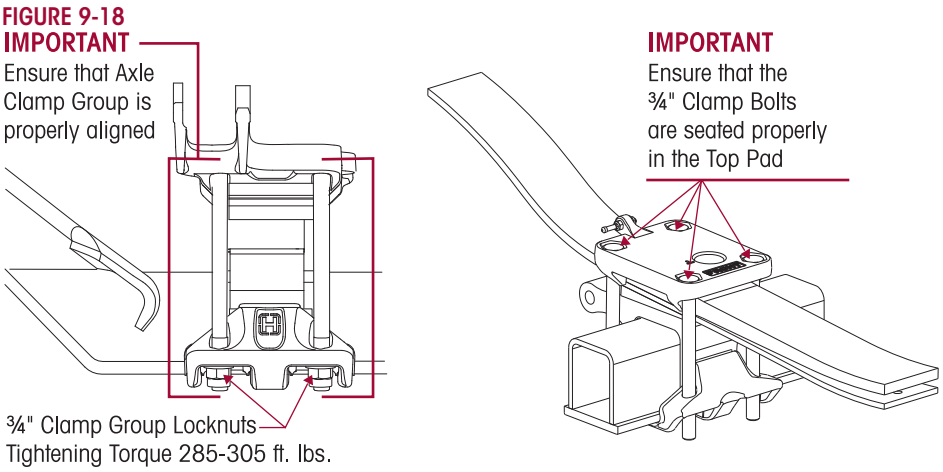

FIGURE 9-19

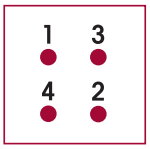

10. Tighten the clamp group locknuts evenly in 50 foot pounds increments to 285-305 foot pounds torque in the proper pattern to achieve uniform bolt tension, see Figure 9-19.
11. See additional Air Spring Cautions and Warnings in the Important Safety Notice Section of this publication prior to inflating or deflating the suspension system.
12. Install air spring.
13. Install air lines, and air up system.
14. Remove the frame supports and load the front axle with the vehicle weight.
15. Verify proper ride height. See Alignment & Adjustments Section of this publication.
16. Tighten the M20 spring eye bolt locknuts to vehicle manufacturer's specifications.

SOFTEK LEAF SPRING ASSEMBLY

DISASSEMBLY

1. Place the vehicle on a level floor.
2. Chock the wheels.
3. Raise the vehicle.
4. Support the vehicle with frame stands.
5. Suspend the front axle to remove the load from leaf spring assembly.
6. Remove the front and rear M20 spring eye bolts washer and locknuts. Loosen the M20 shackle pivot bolt.

SERVICE HINT

To ease in the removal of the spring eye bolts, it may be necessary to raise the axle slightly.

7. Remove the ¾" clamp group U-bolts, washers and locknuts. Discard the fasteners.

WARNING

DO NOT USE A CUTTING TORCH TO REMOVE CLAMP GROUP BOLTS OR ATTACHING FASTENERS. THE USE OF SUCH HEAT ON SUSPENSION COMPONENTS CAN ADVERSELY AFFECT THE STRENGTH OF THESE PARTS. A COMPONENT DAMAGED IN THIS MANNER CAN RESULT IN THE LOSS OF VEHICLE CONTROL AND POSSIBLE PERSONAL INJURY OR PROPERTY DAMAGE.

SERVICE HINT

If a clamp group nut fails to come off bolt, cut half way through the bolt with an abrasive cut off wheel, taking care not to contact axle beam or other components. Using an impact wrench, spin the locknut to fracture the bolt and remove.

8. Remove the top pad, galvanized liner and the bottom axle wrap, see Figure 9-20.
9. Remove the spring assembly.

FIGURE 9-20

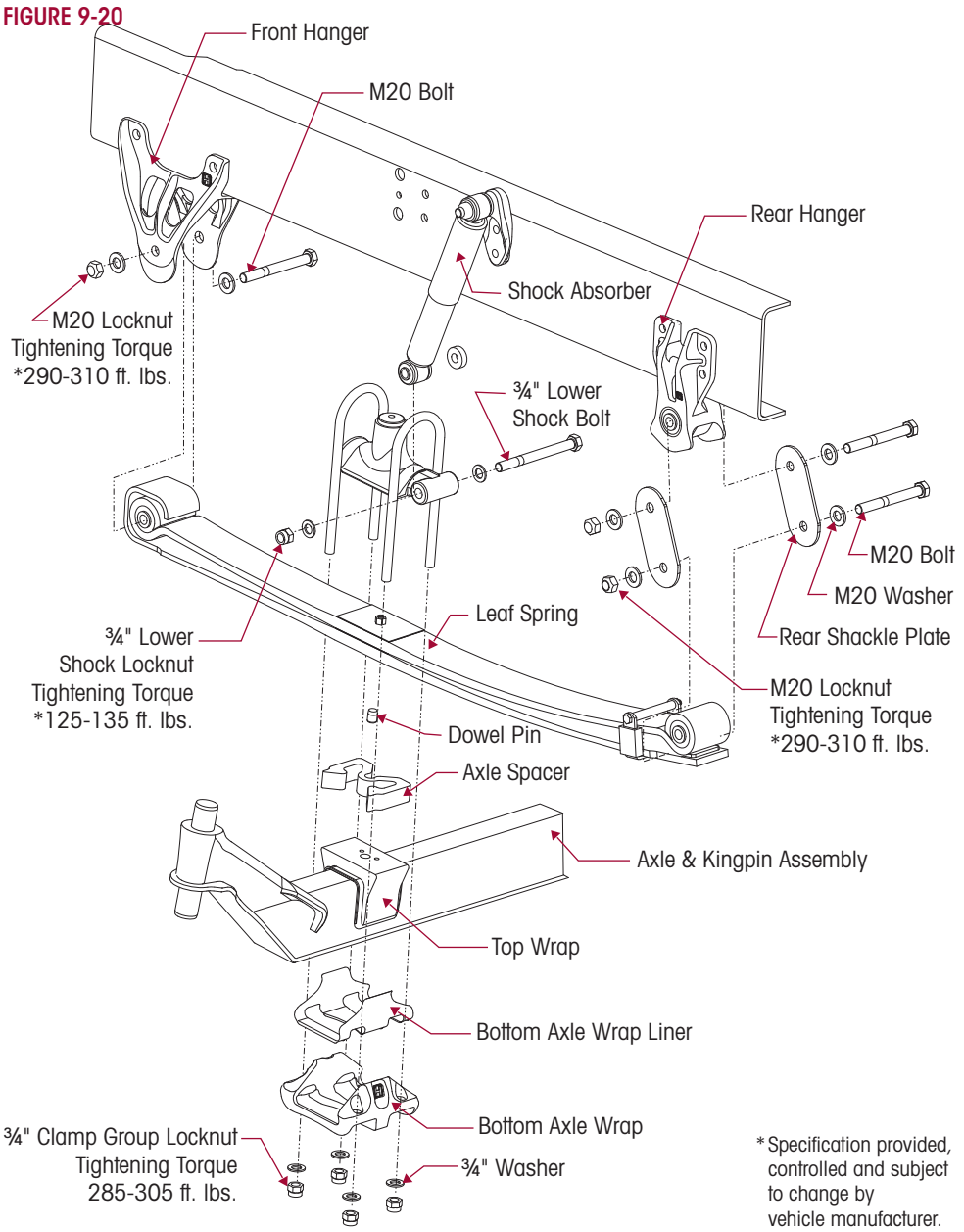

ASSEMBLY

1. Install the new spring and wrap leaf assembly on the axle. Verify that the center bolt is located properly in the top axle wrap and spacer (if equipped), see Figure 9-20.
2. Install the new galvanized liner and the top pad onto the spring.
3. Remove and replace the bottom axle wrap liner located in bottom axle wrap.
4. Install the bottom axle wrap.
5. Install the new ¾" clamp group U-bolts, washers, and locknuts. The locknuts must be replaced when the clamp group is removed, to prevent premature bolt fatigue.
6. Snug the clamp group, **DO NOT** torque at this time.

7. Raise the axle and the spring and wrap leaf assembly into the front hanger and rear shackle assembly.
8. Install the M20 spring eye bolts, washers and locknuts. Snug bolts. **DO NOT** tighten at this time.
9. Ensure that the clamp group is properly aligned and the U-bolts are seated in the top pad, and the bottom axle wrap is centered with the top axle wrap, see Figure 9-21.

FIGURE 9-21

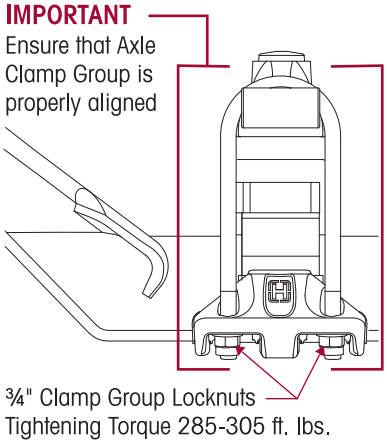

FIGURE 9-22

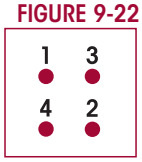

10. Tighten the clamp group locknuts evenly in 50 foot pounds increments to 285-305 foot pounds torque in the proper pattern to achieve uniform bolt tension, see Figure 9-22.
11. Remove the frame supports and load the front axle with the vehicle weight.
12. Tighten the M20 spring eye bolt locknuts to vehicle manufacturer's specifications.

FRONT LEAF SPRING EYE BUSHINGS

The spring eye bushings for the AIRTEK and SOFTEK spring and wrap leaf assemblies are designed to provide extended service life. If premature wear occurs careful consideration must be given to the contributing factor that caused the wear. This must be corrected in order to prevent the new bushing from wearing in the same manner. The front and rear bushings are permanently installed in the spring leaf and are not serviceable. If a bushing wears prematurely, the spring and wrap leaf assembly must be replaced. Follow the procedure for the Front Leaf Spring removal in the Component Replacement Section of this publication.

AIRTEK/SOFTEK SHOCK ABSORBER – VISION (8K/10K)

It is not necessary to replace shock absorbers in pairs if only one shock requires replacement.

DISASSEMBLY

1. Remove the ¾" lower mounting bolt, fasteners, and spacer.
2. Remove the ¾" upper mounting bolt and fasteners.
3. Slide the shock absorber out of the upper bracket and off of the lower mounting bolt.
4. Inspect the shock absorber mounting brackets and hardware for damage or wear, replace as necessary.

ASSEMBLY

1. Install the shock absorber into the upper mounting bracket.
2. Install the upper ¾" shock mounting bolt, washers and locknut.
3. Apply a thin coating of anti-seize compound to the shock absorber lower mounting bolt shank, to the mating face of the axle wrap and spacer, and to the inside bore of the aluminum axle wrap. This is necessary to help prevent seizing of the bolt to the aluminum axle wrap.
4. Install the lower ¾" bolt from the inboard side to the outboard side of the top axle wrap and attach the spacer, washer, and locknut, see Figure 9-23.
5. Tighten both upper and lower ¾" locknuts to vehicle manufacturer's specifications, see Figure 9-23.

FIGURE 9-23

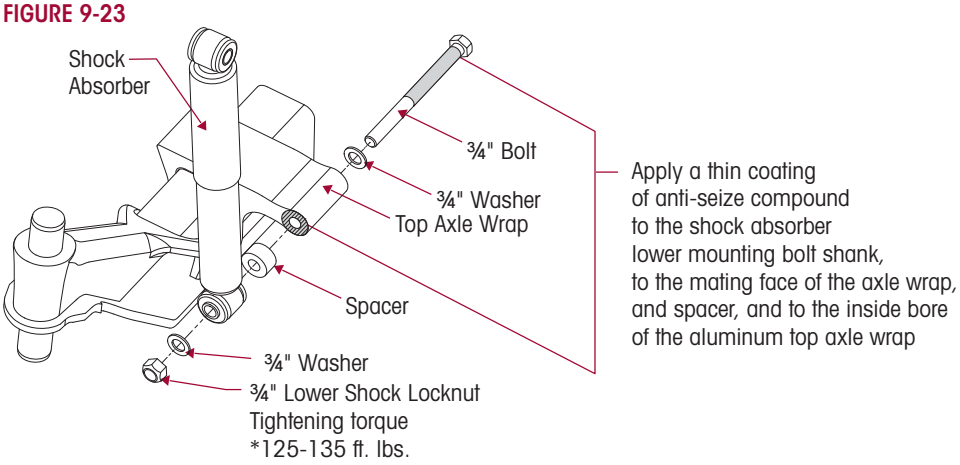

*Specification provided, controlled and subject to change by vehicle manufacturer.

AIRTEK/SOFTEK SHOCK ABSORBER – ALL AMERICAN (13.2K/14.6K)

It is not necessary to replace shock absorbers in pairs if only one shock requires replacement.

DISASSEMBLY

1. Remove the ¾" lower mounting bolt, fasteners, and spacer.
2. Remove the ¾" upper mounting bolt and fasteners.
3. Slide the shock absorber out of the lower bracket and off of the lower mounting bolt.
4. Inspect the shock absorber mounting brackets and hardware for damage or wear, replace as necessary.

FIGURE 9-24
AIRTEK 14.6K

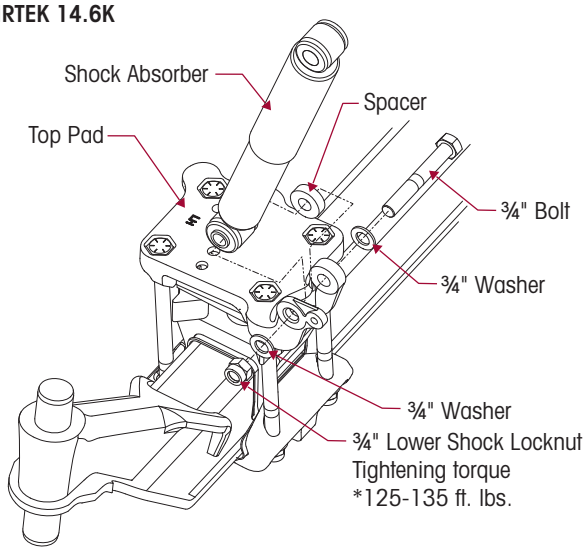

FIGURE 9-25
SOFTEK 13.2K/14.6K

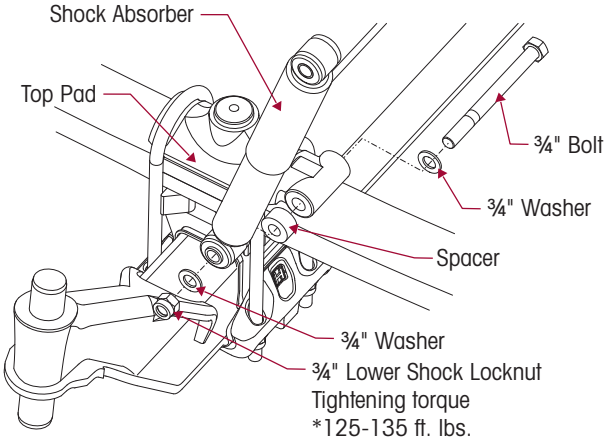

*Specification provided, controlled and subject to change by vehicle manufacturer.

ASSEMBLY

1. Install the shock absorber into the upper mounting bracket.
2. Install the upper ¾" shock mounting bolt, washers and locknut.
3. Install the lower ¾" bolt from the inboard side to the outboard side of the top axle wrap and attach the spacer, washer, and locknut, see Figures 9-24 and 9-25.
4. Tighten both upper and lower ¾" locknuts to vehicle manufacturer's specifications, see Figures 9-24 and 9-25.

AIRTEK BOTTOM AXLE WRAP

DISASSEMBLY

1. Place the vehicle on level floor.
2. Chock the wheels.
3. Raise the frame.
4. Support the vehicle with frame stands.

WARNING

PRIOR TO AND DURING DEFLATION AND INFLATION OF THE FRONT AIR SUSPENSION SYSTEM, ENSURE THAT ALL PERSONNEL AND EQUIPMENT ARE CLEAR FROM UNDER THE VEHICLE AND AROUND THE SERVICE AREA, FAILURE TO DO SO CAN CAUSE SERIOUS PERSONAL INJURY, DEATH, OR PROPERTY DAMAGE.

5. See additional Air Spring Cautions and Warnings in the Important Safety Notice Section of this publication prior to inflating or deflating the suspension system.
6. Deflate the air springs by disconnecting the height control valve linkage and lowering the height control valve arm. This will exhaust the air pressure in the air springs.

WARNING

DO NOT USE A CUTTING TORCH TO REMOVE CLAMP GROUP BOLTS OR ATTACHING FASTENERS. THE USE OF SUCH HEAT ON SUSPENSION COMPONENTS CAN ADVERSELY AFFECT THE STRENGTH OF THESE PARTS. A COMPONENT DAMAGED IN THIS MANNER CAN RESULT IN THE LOSS OF VEHICLE CONTROL AND POSSIBLE PERSONAL INJURY OR PROPERTY DAMAGE.

SERVICE HINT

If a clamp group nut fails to come off bolt, cut half way through the bolt with an abrasive cut off wheel, taking care not to contact axle beam or other components. Using an impact wrench, spin the locknut to fracture the bolt and remove.

7. Remove ¾" hex bolts, washers and locknuts. Removal of the air spring will be required. See Air Spring Replacement instructions in this section. Discard fasteners.
8. Remove bottom axle wrap. It may be necessary to use a dead blow mallet to dislodge axle wrap.
9. Once removed inspect axle wrap for damage. Replace if necessary.
10. Discard used bottom axle wrap liner.

ASSEMBLY

1. Install new bottom axle wrap liner into bottom axle wrap.
2. Install bottom axle wrap on axle.
3. Install new ¾" clamp group bolts, washers and locknuts. Ensure that the clamp group is properly aligned and the hex bolts are seated in the top pad, and the bottom axle wrap is centered on the top axle wrap, see Figure 9-26.

FIGURE 9-26 AIRTEK

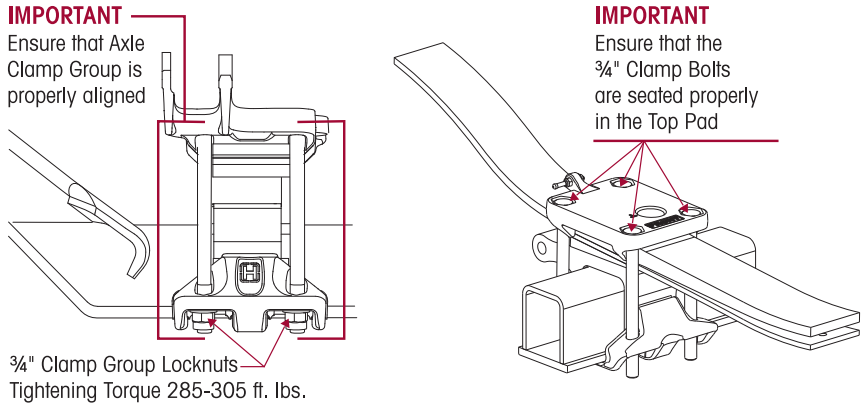

FIGURE 9-27

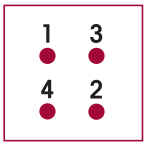

4. Tighten locknuts evenly to 285-305 foot pounds torque, see Figure 9-27 for proper torque sequence.
5. Install Air spring. See Air Spring assembly in this section.
6. Remove the wheel chocks.

SOFTEK BOTTOM AXLE WRAP

DISASSEMBLY

1. Place the vehicle on level floor.
2. Chock the wheels.
3. Raise the frame.
4. Support the vehicle with frame stands.

WARNING

DO NOT USE A CUTTING TORCH TO REMOVE CLAMP GROUP BOLTS OR ATTACHING FASTENERS. THE USE OF SUCH HEAT ON SUSPENSION COMPONENTS CAN ADVERSELY AFFECT THE STRENGTH OF THESE PARTS. A COMPONENT DAMAGED IN THIS MANNER CAN RESULT IN THE LOSS OF VEHICLE CONTROL AND POSSIBLE PERSONAL INJURY OR PROPERTY DAMAGE.

SERVICE HINT

If a clamp group nut fails to come off bolt, cut half way through the bolt with an abrasive cut off wheel, taking care not to contact axle beam or other components. Using an impact wrench, spin the locknut to fracture the bolt and remove.

5. Remove ¾" U-bolts, washers and locknuts. Discard fasteners.
6. Remove bottom axle wrap. It may be necessary to use a dead blow mallet to dislodge axle wrap.
7. Once removed inspect axle wrap for damage. Replace if necessary.
8. Discard used bottom axle wrap liner.

ASSEMBLY

1. Install new bottom axle wrap liner into bottom axle wrap.
2. Install bottom axle wrap on axle.
3. Install new ¾" U-bolts, washers and locknuts. Ensure that the clamp group is properly aligned and the U-bolts are seated in the top pad, and the bottom axle wrap is centered with the top axle wrap, see Figure 9-28.
4. Tighten locknuts evenly to 285-305 foot pounds torque, see Figure 9-27 for proper torque sequence.
5. Remove the wheel chocks.

FIGURE 9-28 SOFTEK

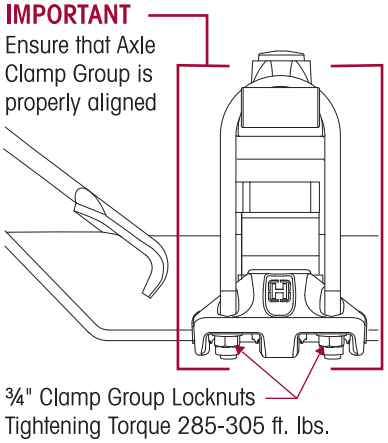

AIRTEK TOP AXLE WRAP (In Chassis)

DISASSEMBLY

1. Place the vehicle on level floor.
2. Chock the wheels.
3. Raise the frame.
4. Support the vehicle with frame stands.
5. Suspend the front axle to remove the load from the spring and wrap leaf assembly.

WARNING

PRIOR TO AND DURING DEFLATION AND INFLATION OF THE FRONT AIR SUSPENSION SYSTEM, ENSURE THAT ALL PERSONNEL AND EQUIPMENT ARE CLEAR FROM UNDER THE VEHICLE AND AROUND THE SERVICE AREA, FAILURE TO DO SO CAN CAUSE SERIOUS PERSONAL INJURY, DEATH, OR PROPERTY DAMAGE.

6. See additional Air Spring Cautions and Warnings in the Important Safety Notice Section of this publication prior to inflating or deflating the suspension system.

DANGER

AIR SPRINGS MUST BE DEFLATED PRIOR TO LOOSENING ANY CLAMP GROUP HARDWARE. UNCONSTRAINED AIR SPRINGS CAN VIOLENTLY SHIFT, RESULTING IN POSSIBLE PERSONAL INJURY, DEATH OR PROPERTY DAMAGE.

7. Deflate the air springs by disconnecting the height control valve linkage and lowering the height control valve arm. This will exhaust the air pressure in the air springs.
8. Disconnect the air lines at the air springs.
9. Remove the air spring (See Air Spring disassembly in this section).
10. Support the axle with a jack.
11. Remove the front and rear M20 spring eye bolts, washers and locknuts.

SERVICE HINT

A bottle jack may be required to raise the axle slightly in order to remove spring eye bolts.

WARNING

DO NOT USE A CUTTING TORCH TO REMOVE CLAMP GROUP BOLTS OR ATTACHING FASTENERS. THE USE OF SUCH HEAT ON SUSPENSION COMPONENTS CAN ADVERSELY AFFECT THE STRENGTH OF THESE PARTS. A COMPONENT DAMAGED IN THIS MANNER CAN RESULT IN THE LOSS OF VEHICLE CONTROL AND POSSIBLE PERSONAL INJURY OR PROPERTY DAMAGE.

SERVICE HINT

If a clamp group nut fails to come off bolt, cut half way through the bolt with an abrasive cut off wheel, taking care not to contact axle beam or other components. Using an impact wrench, spin the locknut to fracture the bolt and remove.

12. Remove the ¾" clamp group bolts, washers and locknuts. Discard fasteners.
13. Remove the top pad, the galvanized liner, and the bottom axle wrap.
14. Remove the lower shock mounting bolt.
15. Remove the spring and wrap leaf assembly
16. Strike the axle wrap with a dead blow mallet at the front and rear on the underside of the axle wrap to dislodge it from the axle, see Figure 9-29.
17. Clean and inspect the axle wrap and axle wrap liner for cracks or damage, replace each if cracks or damage are present.

FIGURE 9-29

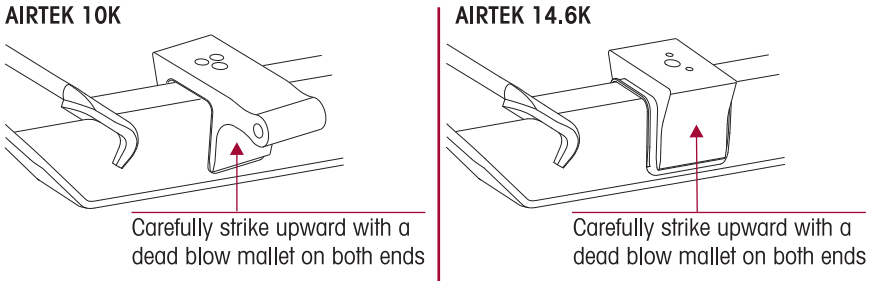

ASSEMBLY

1. Install the new axle wrap liner on the axle.
2. Spray the axle wrap liner and the axle wrap with a silicon lubricant.
3. Position the axle wrap on the axle, see Figure 9-30.

CAUTION

DO NOT STRIKE THE TOP AXLE WRAP WITH A HAMMER. HENDRICKSON RECOMMENDS USING A PLASTIC DEAD BLOW MALLET WITH CARE WHEN INSTALLING THE AXLE WRAP.

FIGURE 9-30

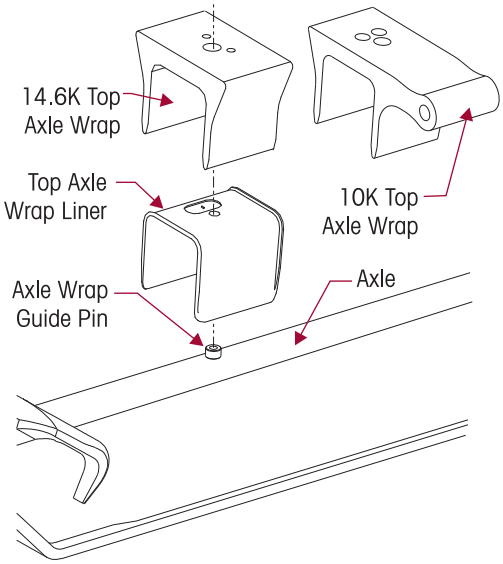

4. Protect the top surface of the axle wrap with a block of wood, cardboard, or shop towels.
5. Install a bottle jack between the axle wrap and frame rail flange.
6. Jack the axle wrap down into position on the axle, using care to make sure the axle wrap bore indexes the locating bushing on the axle.

IMPORTANT NOTE

For Flat Floor Models install the intermediate dowel pin into the axle wrap.

7. Install the spring and wrap leaf assembly on the axle wrap (indexing the dowel pin if equipped).
8. Install the galvanized liner and the top pad on the spring and wrap leaf assembly.
9. Remove and replace the bottom axle wrap liner.
10. Install the bottom axle wrap.
11. Install the new ¾" clamp group bolts, washers, and locknuts.
12. Snug the clamp group, **DO NOT** torque at this time.
13. Use a jack and raise the axle and spring assembly into the front spring hanger and shackle assembly.

SERVICE HINT

A bottle jack may be required to raise the axle slightly in order to install the spring eye bolts.

14. Install the M20 spring eye bolts in the front spring hanger and rear shackle assembly.
15. Ensure that the clamp group is properly aligned and the hex bolts are seated in the top pad, and the bottom axle wrap is centered with the top axle wrap, see Figure 9-31.

FIGURE 9-31

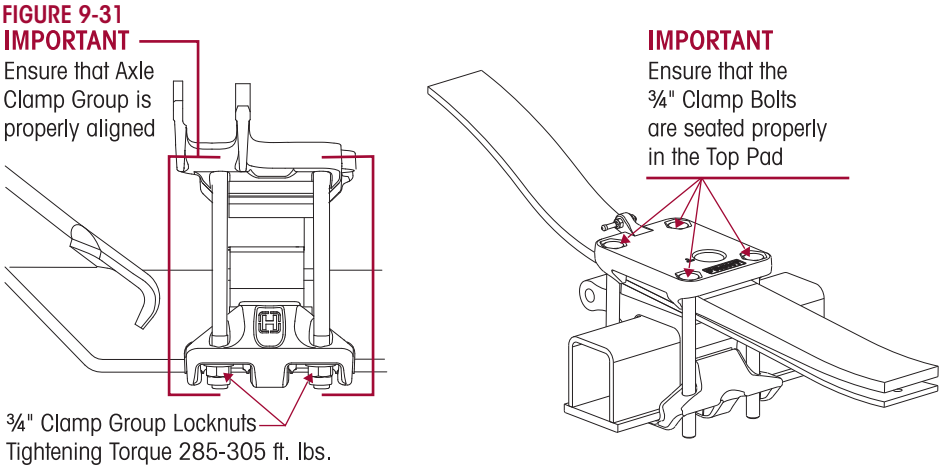

FIGURE 9-32

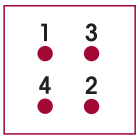

16. Tighten the ¾" clamp group locknuts evenly to 285-305 foot pounds torque in the proper sequence, see Figure 9-32.
17. Remove the jack from the axle.
18. Remove the frame stands.
19. See additional Air Spring Cautions and Warnings in the Important Safety Notice Section of this publication prior to inflating or deflating the suspension system.
20. Attach air lines to the air springs.
21. Install shocks. (See shock absorber assembly in this section)
22. Air up system to proper ride height. (See Ride Height Adjustment in the Alignment & Adjustments Section of this publication).
23. Tighten the M20 spring eye bolt locknuts to vehicle manufacturer's specifications, see Figure 9-33.
24. Remove the wheel chocks.

FIGURE 9-33

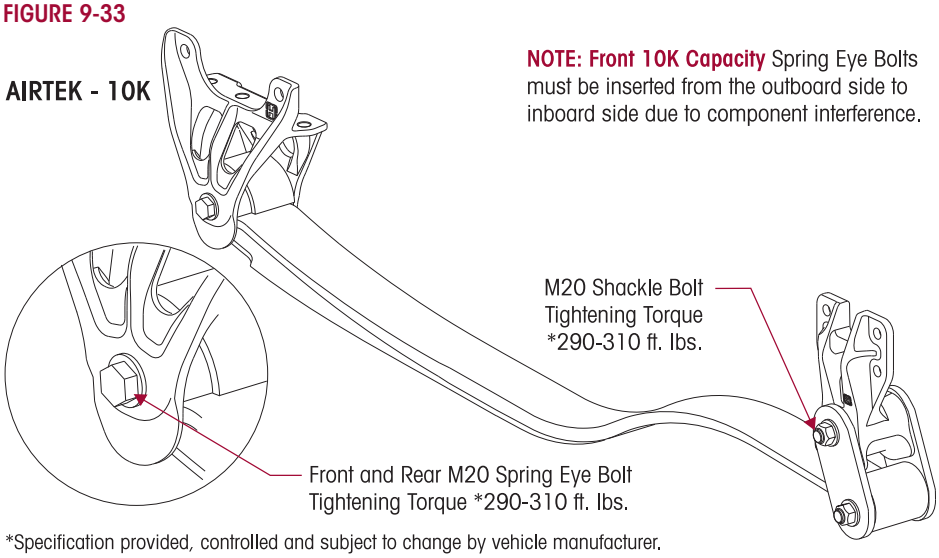

*Specification provided, controlled and subject to change by vehicle manufacturer.

SOFTEK TOP AXLE WRAP (In Chassis)

DISASSEMBLY

1. Place the vehicle on level floor.
2. Chock the wheels.
3. Raise the frame.
4. Support the vehicle with frame stands.
5. Suspend the front axle to remove the load from the spring and wrap leaf assembly.
6. Remove the front and rear M20 spring eye bolts, washers and locknuts. Loosen the M20 shackle pivot bolt.

SERVICE HINT

A bottle jack may be required to raise the axle slightly in order to remove spring eye bolts.

7. Support the axle with a jack.

WARNING

DO NOT USE A CUTTING TORCH TO REMOVE CLAMP GROUP BOLTS OR ATTACHING FASTENERS. THE USE OF SUCH HEAT ON SUSPENSION COMPONENTS CAN ADVERSELY AFFECT THE STRENGTH OF THESE PARTS. A COMPONENT DAMAGED IN THIS MANNER CAN RESULT IN THE LOSS OF VEHICLE CONTROL AND POSSIBLE PERSONAL INJURY OR PROPERTY DAMAGE.

SERVICE HINT

If a clamp group nut fails to come off bolt, cut half way through the bolt with an abrasive cut off wheel, taking care not to contact axle beam or other components. Using an impact wrench, spin the locknut to fracture the bolt and remove.

8. Remove the ¾" clamp group U-bolts, washers and locknuts. Discard fasteners.
9. Remove the top pad and the bottom axle wrap.
10. Remove the lower shock mounting bolt.
11. Remove the spring and wrap leaf assembly.

FIGURE 9-34

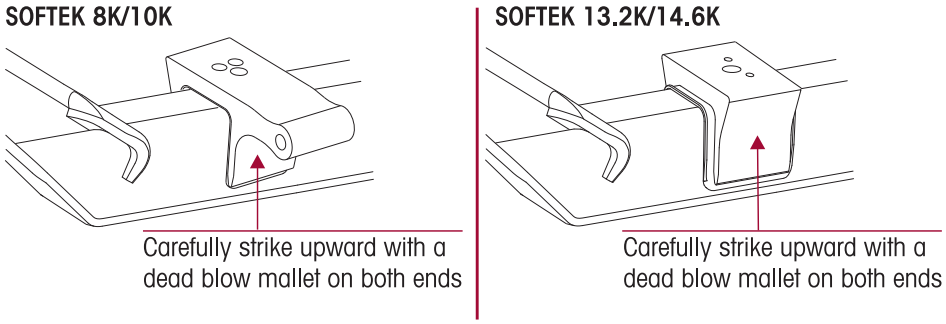

12. Strike the axle wrap with a dead blow mallet at the front and rear on the underside of the axle wrap to dislodge it from the axle, see Figure 9-34.
13. Clean and inspect the axle wrap and axle wrap liners for cracks or damage, replace each if cracks or damage are present.

ASSEMBLY

1. Install the new axle wrap liner on the axle.
2. Spray the axle wrap liner and the axle wrap with a silicon lubricant.

FIGURE 9-35

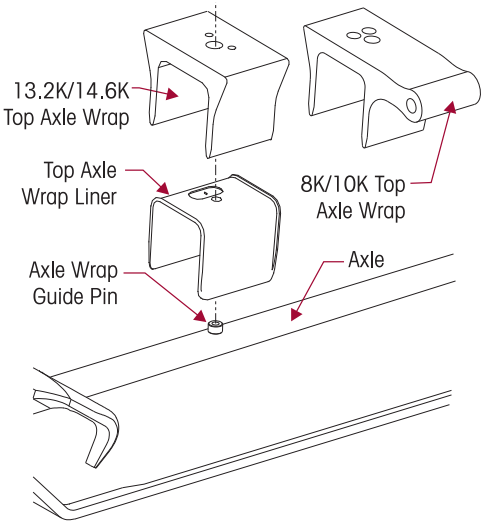

3. Position the axle wrap on the axle, see Figure 9-35.

CAUTION

DO NOT STRIKE THE TOP AXLE WRAP WITH A HAMMER. HENDRICKSON RECOMMENDS USING A PLASTIC DEAD BLOW MALLET WITH CARE WHEN INSTALLING THE AXLE WRAP.

4. Protect the top surface of the axle wrap with a block of wood, cardboard, or shop towels.
5. Install a bottle jack between the axle wrap and frame rail flange.
6. Jack the axle wrap down into position on the axle, using care to make sure the axle wrap bore indexes the locating bushing on the axle.
7. Install the spring and wrap leaf assembly on the axle wrap indexing the center bolt in the locating hole.
8. Install the top pad on the spring and wrap leaf assembly.
9. Remove and replace the bottom axle wrap liner.
10. Install the bottom axle wrap.
11. Install the new ¾" clamp group U-bolts, washers, and locknuts.
12. Snug the clamp group, **DO NOT** torque at this time.
13. Use a jack and raise the axle and spring assembly into the front spring hanger and shackle assembly.

SERVICE HINT

A bottle jack may be required to raise the axle slightly in order to install the spring eye bolts.

14. Install the M20 spring eye bolts, washer and locknuts in the front spring hanger and rear shackle assembly.
15. Ensure that the clamp group is properly aligned and the U-bolts are seated in the top pad, and the bottom axle wrap is centered with the top axle wrap, see Figure 9-36.

FIGURE 9-36 SOFTEK

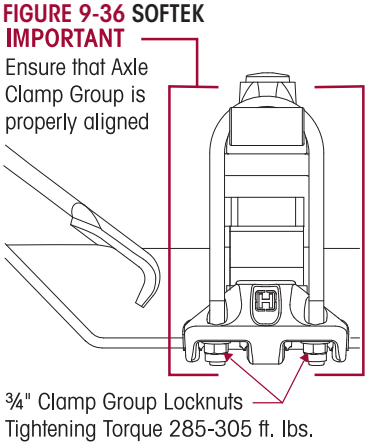

FIGURE 9-37

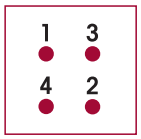

16. Tighten the ¾" clamp group locknuts evenly to 285-305 foot pounds torque in the proper sequence, see Figure 9-37.
17. Apply a thin coating of anti-seize to the lower shock mounting bolt.
18. Install shocks. (See shock absorber assembly in this section)
19. Remove the jack from the axle.
20. Remove the frame stands.
21. Tighten the M20 spring eye bolt locknuts to vehicle manufacturer's specifications.
22. Remove the wheel chocks.

AIRTEK FRONT AXLE ASSEMBLY

STEERTEK AXLE CLAMP GROUP CONSIST OF THE FOLLOWING COMPONENTS:

- Top axle wrap
- Top axle wrap liner
- Top pad
- Bottom axle wrap
- Bottom axle wrap liner
- ¾" Bolts, washers and nylon locknuts

FIGURE 9-38
SHOWN AIRTEK 10K

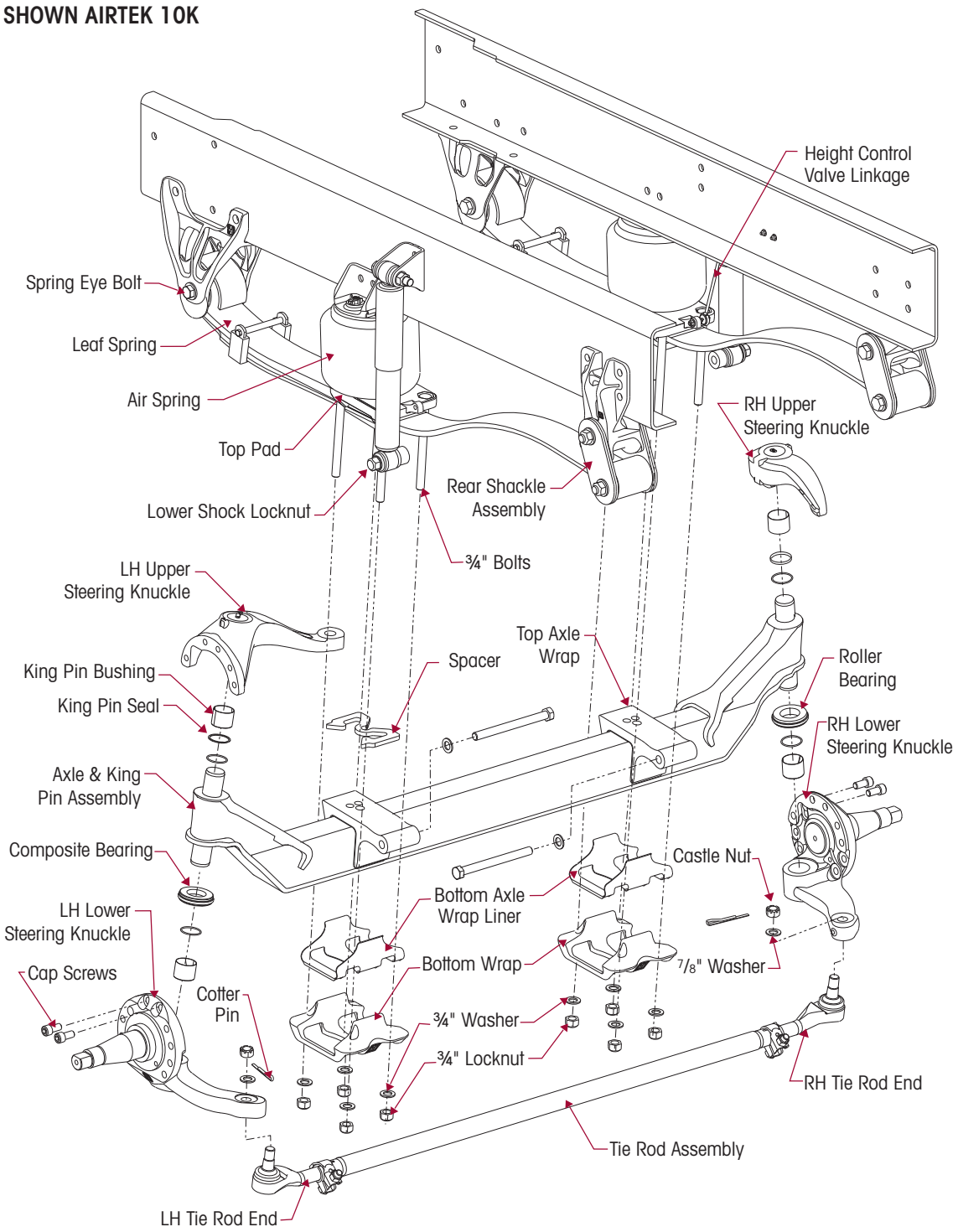

SOFTEK FRONT AXLE ASSEMBLY

STEERTEK AXLE CLAMP GROUP CONSIST OF THE FOLLOWING COMPONENTS:

- Top axle wrap
- Top axle wrap liner
- Top pad
- Bottom axle wrap
- Bottom axle wrap liner
- ¾" Bolts, washers and nylon locknuts

FIGURE 9-39
SHOWN SOFTEK 13.2K/14.6K

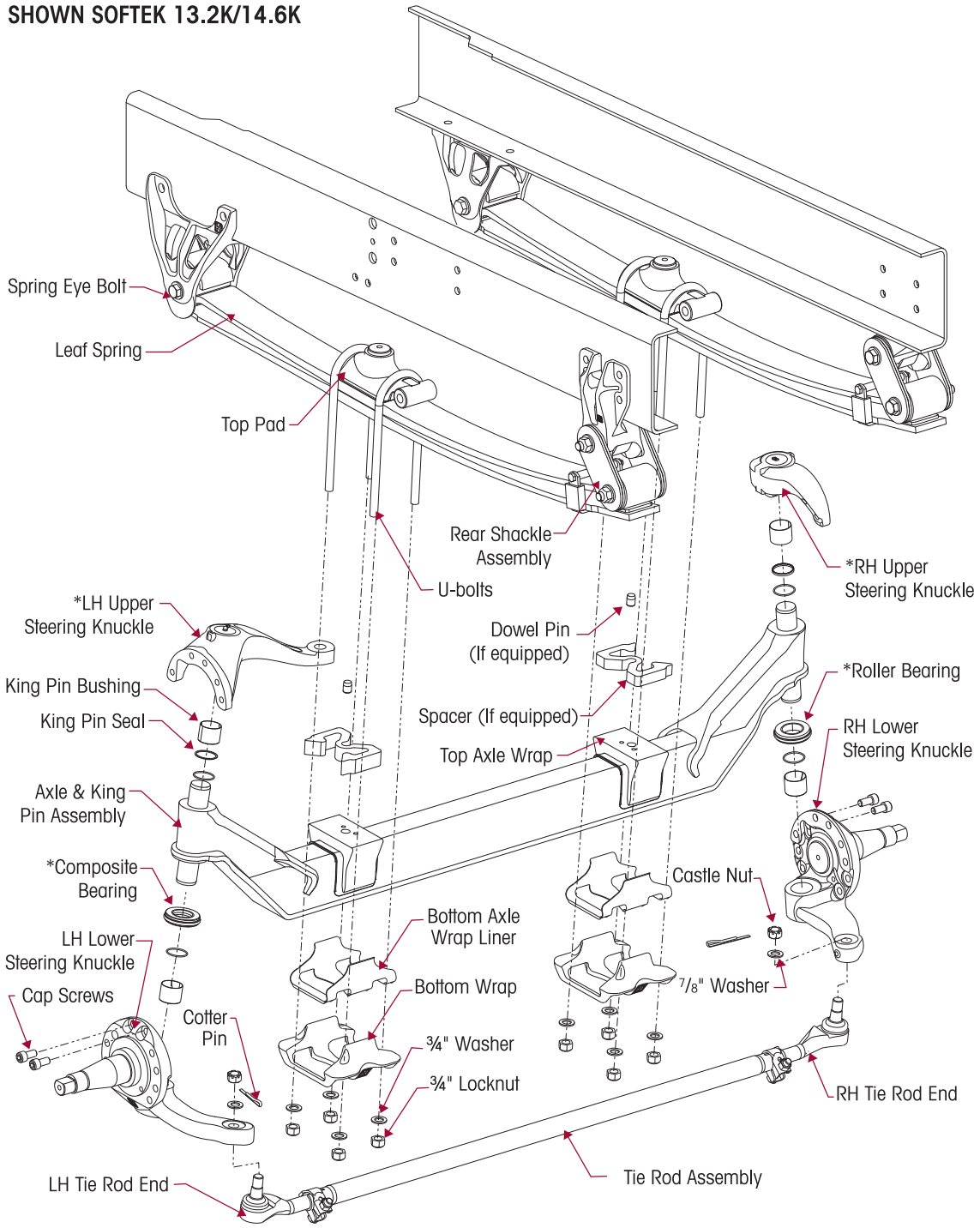

*For right hand drive axle configuration, see Parts List Section of this publication.

STEERTEK AXLE REMOVAL

AXLE DISASSEMBLY

Refer to Figures 9-38 and 9-39 when replacing the components of the STEERTEK axle.

WARNING

DO NOT USE A TORCH ON CLAMP GROUP BOLTS OR ANY OTHER PART OF THE AIRTEK SUSPENSION. IF THE CLAMP GROUP BOLTS WILL NOT COME LOOSE WITH AN IMPACT WRENCH, USE A CUT OFF WHEEL AND CUT THE SHANK OF THE BOLT. THE USE OF A TORCH CAN CAUSE DAMAGE TO CERTAIN AIRTEK COMPONENTS THAT CAN RESULT IN THE LOSS OF VEHICLE CONTROL AND POSSIBLE PERSONAL INJURY OR PROPERTY DAMAGE.

1. Place the vehicle on level floor.
2. Chock the wheels.
3. SOFTEK equipped vehicles — proceed to Step 6.

WARNING

PRIOR TO AND DURING DEFLATION AND INFLATION OF THE FRONT AIR SUSPENSION SYSTEM, ENSURE THAT ALL PERSONNEL AND EQUIPMENT ARE CLEAR FROM UNDER THE VEHICLE AND AROUND THE SERVICE AREA, FAILURE TO DO SO CAN CAUSE SERIOUS PERSONAL INJURY, DEATH, OR PROPERTY DAMAGE.

4. See additional Air Spring Cautions and Warnings in the Important Safety Notice Section of this publication prior to inflating or deflating the suspension system.
5. AIRTEK equipped vehicles — Deflate the air springs by disconnecting the height control valve linkage and lowering the height control valve linkage arm. This will exhaust the air pressure in the air springs.
6. Raise the frame.
7. Support the vehicle with frame stands.
8. Suspend the front axle with the shocks attached.
9. Remove the front wheels, hubs, brake shoes and backing plate assembly.
10. Disconnect the drag link from the steering arm.
11. SOFTEK equipped vehicles — proceed to Step 13.
12. AIRTEK equipped vehicles — Remove lower air spring mounting fasteners for both air springs at the axle top pad and unseat from the top pad.
13. Support the axle with a floor jack.

WARNING

THE REPAIR OR RECONDITIONING OF SUSPENSION OR AXLE COMPONENTS IS NOT ALLOWED. HENDRICKSON ADVISES REPLACING ALL COMPONENTS FOUND TO BE DAMAGED OR OUT OF SPECIFICATIONS. ALL MAJOR HENDRICKSON COMPONENTS ARE HEAT TREATED AND TEMPERED. AIRTEK COMPONENTS CANNOT BE BENT, WELDED, HEATED, OR REPAIRED WITHOUT REDUCING THE STRENGTH OR LIFE OF THE COMPONENT. FAILURE TO FOLLOW THESE GUIDELINES CAN CAUSE LOSS OF VEHICLE CONTROL, AND POSSIBLE PERSONAL INJURY OR DEATH OR PROPERTY DAMAGE AND WILL VOID APPLICABLE WARRANTIES.

14. If the vehicle is equipped with the shock absorbers attached to the top axle wrap, it will be necessary to remove the lower shock mounting locknuts and washers. Remove the shock absorbers from the lower mounting bolts and push clear of spring assembly.

SERVICE HINT

If a clamp group nut fails to come off bolt, cut half way through the bolt with an abrasive cut off wheel, taking care not to contact axle beam or other components. Using an impact wrench, spin the locknut to fracture the bolt and remove.

15. Remove the ¾" clamp group bolts, washers, and locknuts. Discard fasteners.
16. Lower the axle and remove from the vehicle.

STEERTEK AXLE (Removed from Chassis)

CLAMP GROUP DISASSEMBLY

1. Remove the bottom axle wrap and liner from the axle.
2. Strike the top axle wrap with a dead blow mallet at the front and rear on the underside of the axle wrap to dislodge it from the axle, see Figure 9-40.

FIGURE 9-40

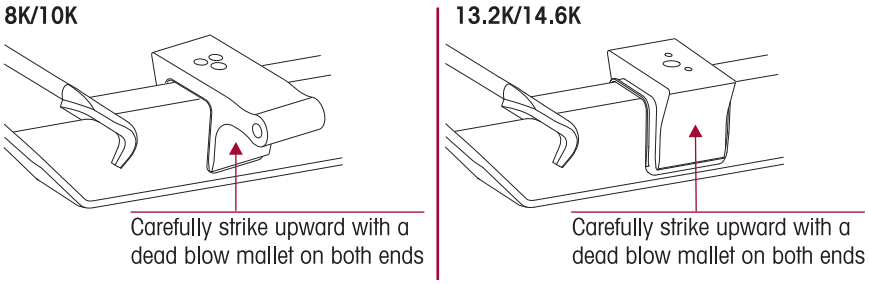

3. After removal of the top axle wrap from the axle inspect for cracks or fretting.
4. Remove the tie rod assembly, see Tie Rod Disassembly in this section.

WARNING

REMOVAL OF THE CAP SCREWS WILL ALLOW THE STEERING KNUCKLE TO SEPARATE FROM THE AXLE. THE BACKBONE MUST BE SUPPORTED BEFORE REMOVAL OF THESE TWO (2) CAP SCREWS. FAILURE TO DO SO CAN CAUSE COMPONENT DAMAGE OR PERSONAL INJURY.

5. Remove the two ⅝" socket head cap screws from the steering knuckle assembly.
6. Remove the steering knuckle, thrust bearing, and shims (if equipped).
7. After complete removal of the one side, repeat Steps 1-6 for the opposite side of the axle.
8. Inspect the steering kingpin bushings for excessive wear. If worn, replace the kingpin bushings and seals. See the Kingpin Bushing replacement instructions in this section.

CLAMP GROUP ASSEMBLY

1. Install the new upper axle wrap liner on the axle. Index the liner with the axle's guide pin, see Figure 9-41.

CAUTION

DO NOT STRIKE THE TOP AXLE WRAP WITH A HAMMER. DAMAGE TO THE ALUMINUM AXLE WRAP WILL OCCUR. USE A PLASTIC DEAD BLOW MALLET WITH CARE WHEN INSTALLING THE AXLE WRAP.

WARNING

SECURELY INSTALL THE TOP WRAP TO THE AXLE. FAILURE TO DO SO CAN CAUSE LOSS OF CONTROL OF THE VEHICLE, PERSONAL INJURY OR PROPERTY DAMAGE.

SERVICE HINT

Apply a lubricant (such as an aerosol silicone) to the outer surface of the plastic liner to aid in assembly of the top axle wrap.

FIGURE 9-41

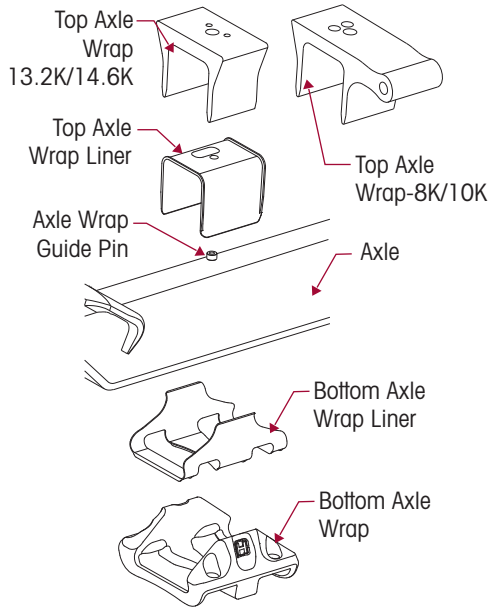

2. Install the top axle wrap, see Axle Wrap Assembly instructions located in this section. The axle wrap must be aligned with the guide pin on the axle.
3. At this point in the assembly, **DO NOT** install anything further on the axle.

AXLE INSTALLATION

1. Place the new axle on the floor jack and position the axle under the vehicle.
2. Install the axle spacer (if equipped) on the top axle wrap prior to raising the axle into position.
3. Raise the axle into position, see Figures 9-42 and 9-43. Care must be taken at this point to ensure that the front leaf spring assemblies' center bolt is aligned correctly in the top axle wrap.

FIGURE 9-42

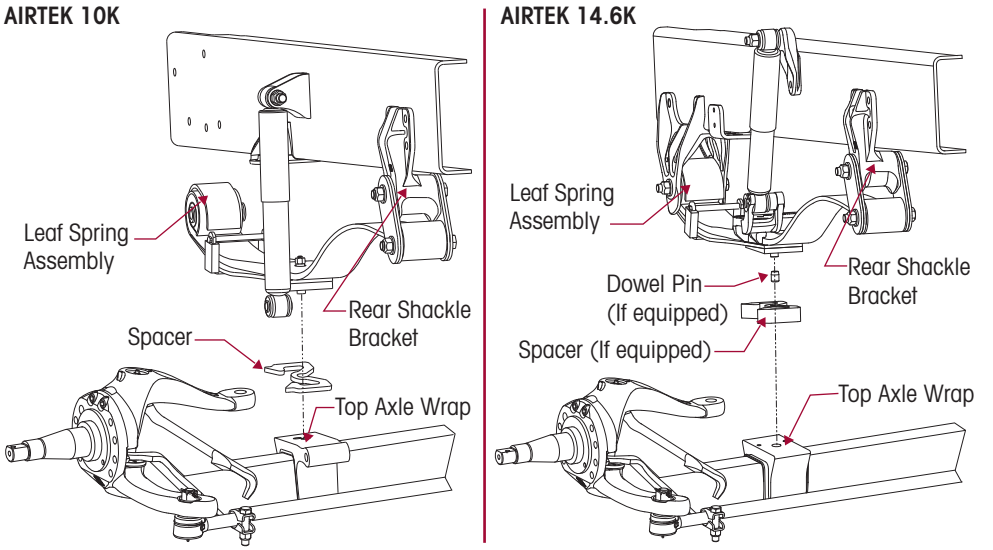

FIGURE 9-43

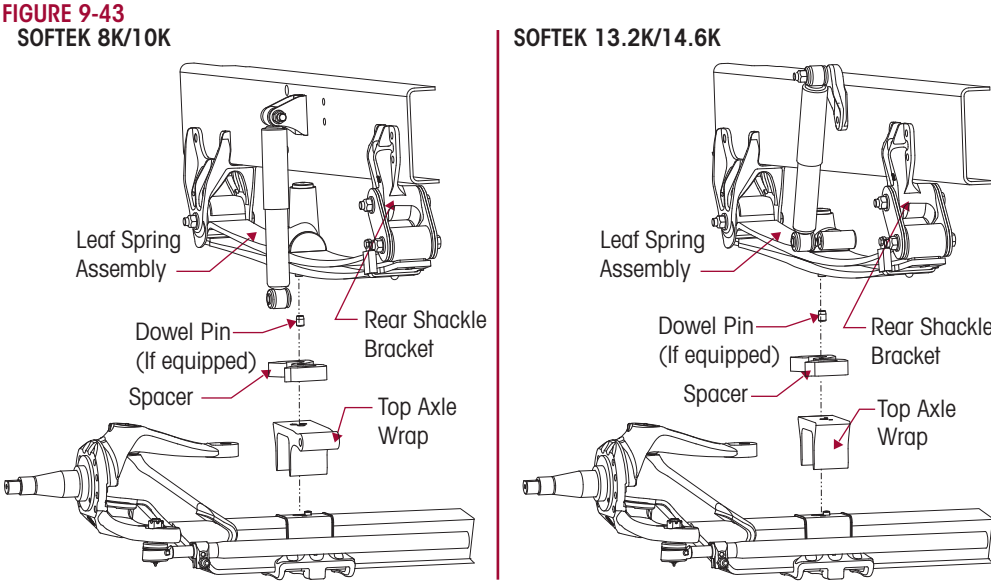

4. Verify that the galvanized liner is between the leaf springs and the top pad.
5. Install the new bottom axle wrap liners on the bottom axle wraps.
6. Install the bottom axle wraps on the axle.
7. Install the top pad with the directional identification facing correctly on the vehicle, see Figure 9-44.

FIGURE 9-44

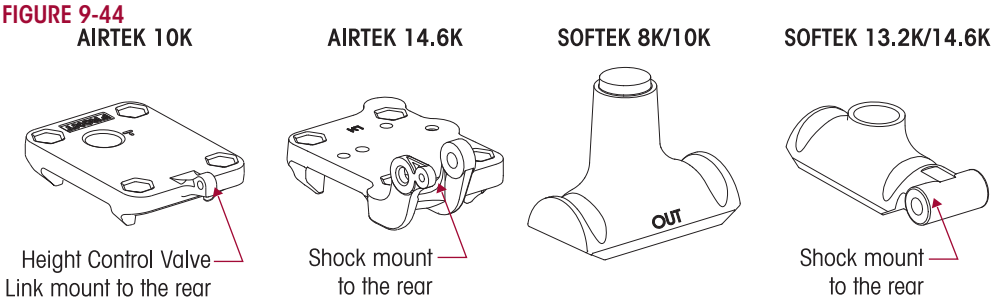

8. Install the new ¾" clamp group bolts, washers and locknuts. Snug the bolts , **DO NOT** tighten to the specified torque at this time.
9. Ensure that the clamp groups are properly aligned and the bolts are seated in the top pad, and the bottom axle wraps are centered on the top axle wraps, see Figure 9-45.

FIGURE 9-45

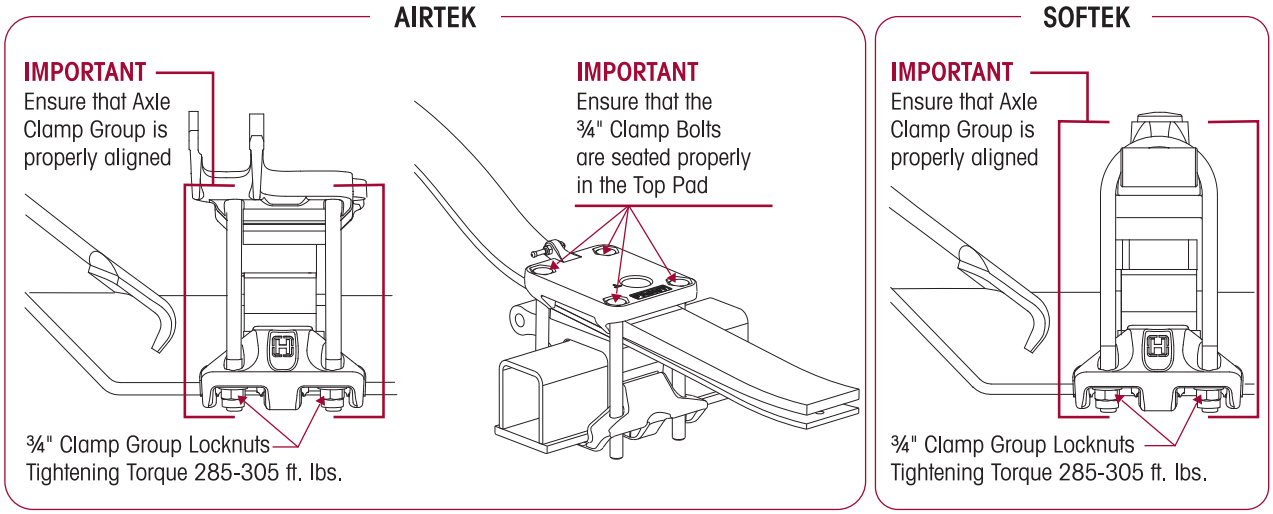

10. SOFTEK equipped vehicles — proceed to Step 13.
11. See additional Air Spring Cautions and Warnings in the Important Safety Notice Section of this publication prior to inflating or deflating the suspension system.
12. AIRTEK equipped vehicles:
    - Engage the 10K air springs into the top pad. The bottom of the air spring snaps into the top pad.
    - Engage the 14.6K air springs into the top pad. Install new lower air spring mounting fasteners and tighten to 20-30 foot pounds torque.
13. Install the lower shock absorber connection (if removed). Install the lower shock fasteners and tighten to vehicle manufacturer's specifications.
14. Install the steering knuckles as per the Steering Knuckle replacement instructions in this section.
15. Install the tie rod assembly as per the Tie Rod replacement instructions in this section.
16. Install the ⅞" hardened washers on the Ackermann arm and the castle nuts. Tighten the castle nuts to 185 foot pounds, then rotate until the first castle slot lines up with the cotter pin bore in the tie rod end. **DO NOT** back off the nut for cotter pin installation.
17. Install the tie rod end cotter pins.
18. Connect the drag link. Install the castle nut. Tighten the castle nut to 185 foot pounds, then rotate until the first castle slot lines up with the cotter pin bore in the drag link. **DO NOT** back off the nut for cotter pin installation.

19. Install the drag link cotter pin.
20. Install the brake backing plate assemblies.
21. Install the brakes, hubs, and wheels as per manufacturer's guidelines.
22. Fill the hubs with the proper lubricant (see manufacturer's guidelines for recommended lubrication specifications).
23. Raise the vehicle and remove the frame stands.
24. Lower the vehicle.
25. SOFTEK equipped vehicles — proceed to Step number 27.
26. AIRTEK equipped vehicles — Reconnect the height control valve and air up the system.

FIGURE 9-46

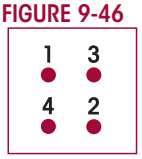

27. Tighten the ¾" clamp group locknuts evenly in 50 foot pounds increments to 285-305 foot pounds torque in the proper sequence to achieve uniform bolt tension, see Figure 9-46.
28. SOFTEK equipped vehicles — proceed to Step number 30.
29. AIRTEK equipped vehicles — Adjust ride height per instructions in the Alignment & Adjustments Section of this publication.
30. Grease the front steering components as per lubrication guidelines in the Preventive Maintenance Section of this publication.
31. Remove the wheel chocks.

STEERING KNUCKLE DISASSEMBLY

DISASSEMBLY

See tools needed to remove and install kingpin bushing under the Special Tools Section of this publication.

The steering knuckle disassembly and assembly includes the Kingpin Preparation and Measurement and Kingpin Bushing Removal process.

1. Place the vehicle on level floor.
2. Chock the wheels.
3. Raise the frame.
4. Support the vehicle with frame stands.
5. Remove the wheel and hub assembly.
6. Remove the brake components from steering knuckle.
7. Remove the tie rod assembly.

SERVICE HINT

Lightly tap the side of the Ackermann arm with a mallet to separate the tie rod end from the Ackermann arm, see Figure 9-47.

8. Remove the drag link from the knuckle if necessary.

FIGURE 9-47

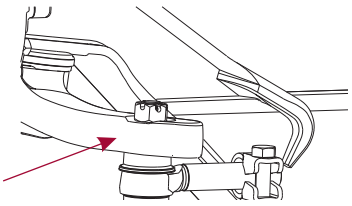

WARNING

REMOVAL OF THE CAP SCREWS WILL ALLOW THE STEERING KNUCKLE TO SEPARATE FROM THE AXLE. THE STEERING KNUCKLE MUST BE SUPPORTED BEFORE REMOVAL OF THESE TWO (2) CAP SCREWS. FAILURE TO DO SO CAN CAUSE COMPONENT DAMAGE OR PERSONAL INJURY.

FIGURE 9-48

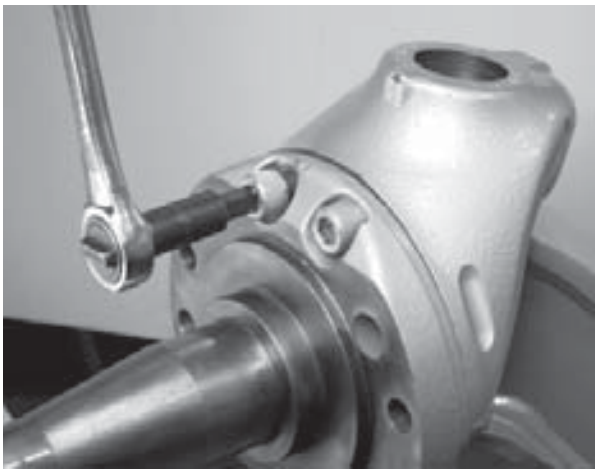

9. Remove the 2 socket head cap screws that connect upper kingpin connection to the steering knuckle, see Figure 9-48.
10. Remove the lower steering knuckle from the kingpin by sliding it down the kingpin.
11. Remove the upper steering knuckle by sliding it up off the kingpin.

KINGPIN PREPARATION AND MEASUREMENT

CLEANING GROUND AND POLISHED PARTS

- Use a cleaning solvent to clean ground or polished parts and surfaces. **DO NOT USE GASOLINE.**
- **DO NOT** clean ground or polished parts in a hot solution tank or with water, steam, or alkaline solutions. These solutions will cause corrosion of the parts.

DRYING THE CLEANED PARTS

- Parts must be dried immediately after cleaning. Dry the parts with clean paper towels, clean rags, or compressed air. **DO NOT** dry bearings by spinning with compressed air. Damage to the bearings will result.

PREVENTING CORROSION ON CLEANED PARTS

- Apply a light coating of oil to all cleaned and dried parts that are going to be reused. **DO NOT** apply oil to the brake lining or the brake drums. If parts are to be stored, apply an effective rust inhibitor to all surfaces.

WARNING

TO HELP PREVENT SERIOUS EYE INJURY, ALWAYS WEAR PROPER EYE PROTECTION WHEN YOU PERFORM VEHICLE MAINTENANCE OR SERVICE.

WARNING

SOLVENT CLEANERS CAN BE FLAMMABLE, POISONOUS AND CAUSE BURNS. TO HELP AVOID SERIOUS PERSONAL INJURY, CAREFULLY FOLLOW THE MANUFACTURER'S PRODUCT INSTRUCTIONS AND GUIDELINES AND THE FOLLOWING PROCEDURES:

- WEAR PROPER EYE PROTECTION.
- WEAR CLOTHING THAT PROTECTS YOUR SKIN.
- WORK IN A WELL VENTILATED AREA.
- DO NOT USE GASOLINE, SOLVENTS OR OTHER MATERIALS THAT CONTAIN GASOLINE THAT CAN EXPLODE.
- HOT SOLUTION TANKS OR ALKALINE SOLUTIONS MUST BE USED CORRECTLY. FOLLOW THE MANUFACTURER'S RECOMMENDED INSTRUCTIONS AND GUIDELINES CAREFULLY TO HELP PREVENT PERSONAL ACCIDENT OR INJURY.

CAUTION

DO NOT USE HOT SOLUTION TANKS OR WATER AND ALKALINE SOLUTIONS TO CLEAN GROUND OR POLISHED PARTS. DAMAGE TO THE PARTS WILL RESULT.

WARNING

THE STEERTEK HAS A UNIQUE AXLE. THE KINGPIN IS CRYOGENICALLY INSTALLED IN THE AXLE. THE KINGPIN IS A NON-REPLACEABLE COMPONENT OF THE AXLE ASSEMBLY. DO NOT TRY TO REMOVE THE KINGPIN. DOING SO WILL DAMAGE THE AXLE AND MAY CAUSE LOSS OF VEHICLE CONTROL, PERSONAL INJURY OR PROPERTY DAMAGE. IF THE KINGPIN SHOWS SIGNS OF MOVEMENT, CONTACT HENDRICKSON PRODUCT ENGINEERING - TECH SERVICES.

1. Prepare and polish the kingpin by removing all grease and excess debris using a fine grit (220 grit or higher) emery cloth and parts solvent, see Figures 9-49 through 9-52.

FIGURE 9-49

FIGURE 9-50

FIGURE 9-51 KINGPIN BEFORE CLEANING

FIGURE 9-52 KINGPIN AFTER CLEANING

2. Inspect the kingpin for wear or damage. Use a micrometer and measure the upper and lower kingpin in two locations. Positions must be 90º opposed from each other. If the kingpin has less than 1.802" diameter, replacement of the axle is necessary, see Figures 9-53 through 9-56.

   Kingpin minimum dimension is 1.802"

FIGURE 9-53

FIGURE 9-54

FIGURE 9-55

FIGURE 9-56

KINGPIN BUSHING REMOVAL

1. Remove the retaining ring for the grease cap.
2. A hydraulic shop press with a minimum forcing capacity of 2.5 tons (or use an arbor press) will be required.

WARNING

BEFORE APPLYING HYDRAULIC PRESSURE TO ANY TOOLING SET-UP, ALWAYS CHECK TO BE SURE THE PRESS PLATE, ADAPTERS, AND COMPONENTS BEING WORKED ON ARE POSITIONED PROPERLY, I.E. "IN LINE" WITH THE RAM. IMPROPER POSITIONING CAN CAUSE PERSONAL INJURY OR COMPONENT DAMAGE.

CAUTION

BEFORE APPLYING HYDRAULIC PRESSURE TO REMOVE OR INSTALL THE KINGPIN BUSHING, SUPPORT THE LOWER STEERING KNUCKLE AS SHOWN IN FIGURES 9-57 AND 9-58. IMPROPER SUPPORT TO THE STEERING KNUCKLES CAN CAUSE COMPONENT DAMAGE.

3. Use the grease cap to press out the kingpin bushing and seal. Remove the grease zerk in the grease cap or use a hollow driver, (see Figure 9-57) to press out the kingpin bushing.
4. Install the lower steering knuckle upside down in press. Be sure to support the lower steering knuckle assembly so that it sits in-line with the press, see Figure 9-58.
5. Use the same procedure to remove the kingpin bushing in the upper kingpin connection or the steering arm, see Figures 9-57 through 9-59.
6. Clean the parts and inspect for reassembly, see Figure 9-60.

FIGURE 9-57

FIGURE 9-58

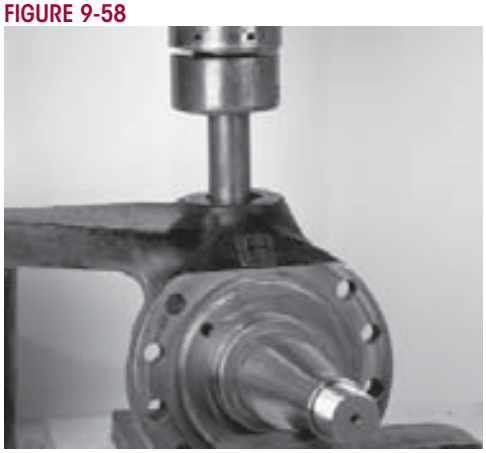

FIGURE 9-59

FIGURE 9-60

STEERING KNUCKLE BORE MEASUREMENT

Complete the following steering knuckle bore inspection and the measurement instructions prior to installing the kingpin bushing.

1. Measure the upper knuckle bore inside diameter at two locations. Always use an inside micrometer or a telescoping gauge when taking a knuckle bore measurement. Some out-of-roundness at the top and bottom of the bore edges is acceptable. Steering knuckle bore diameter is 1.938" ± 0.003"
2. Measure the upper and lower bore in two positions and at two locations. The two positions must be 90º opposed from each other, see Figures 9-61 through 9-63. If the average measurement is more than the knuckle bore maximum diameter specification, replace the knuckle.

FIGURE 9-61

FIGURE 9-62

FIGURE 9-63

KINGPIN BUSHING INSTALLATION

1. A hydraulic shop press with a minimum forcing capacity of 5 tons will be required.

WARNING

BEFORE APPLYING HYDRAULIC PRESSURE TO ANY TOOLING SET-UP, ALWAYS CHECK TO BE SURE THE PRESS PLATE, ADAPTERS, AND COMPONENTS BEING WORKED ON ARE POSITIONED PROPERLY, I.E. "IN LINE" WITH THE RAM. IMPROPER POSITIONING CAN CAUSE PERSONAL INJURY OR COMPONENT DAMAGE.

2. Install the lower or upper steering knuckle in the press.
3. Install the kingpin bushing from the machined side (axle side) of the lower steering knuckle using a bushing driver, (see driver specifications in the Special Tools Section of this publication). Press in bushing to a depth of no less than 15/64" (0.236") or 6 millimeters and no more than 5/16" (0.32") or 8 millimeters, see Figures 9-64 and 9-66.
4. Following this procedure it is necessary to ream the kingpin bushings to fit the kingpins, (see Kingpin Bushing Reaming Instructions).

FIGURE 9-64

FIGURE 9-65

FIGURE 9-66

KINGPIN BUSHING REAMING

CAUTION

REAM THE KINGPIN BUSHINGS WITH AN ADJUSTABLE STRAIGHT FLUTE REAMER. (SEE SPECIAL TOOLS SECTION OF THIS PUBLICATION) DO NOT HONE OR BURNISH THE KINGPIN BUSHINGS. HONING OR BURNISHING WILL DAMAGE THE BUSHINGS AND VOID WARRANTY.

WARNING

WHEN INSTALLING STEERING KNUCKLE COMPONENTS IN A VISE IT IS NECESSARY TO PROTECT THE MACHINED SURFACES FROM GOUGES OR MARRING BY USING BRASS JAWS. FAILURE TO DO SO CAN CAUSE PREMATURE PART DAMAGE, DAMAGE TO THE STEERING KNUCKLE COMPONENTS, LOSS OF WARRANTY, LOSS OF VEHICLE CONTROL, CAUSING PERSONAL INJURY OR PROPERTY DAMAGE.

1. Install the lower steering knuckle assembly in a vise with brass jaws.

SERVICE HINT

It is acceptable to mount the knuckle components in a vise either vertically or horizontally when performing the reaming procedure.

2. Install the reamer into the lower steering knuckle until the blades touch the kingpin bushing.
3. Rotate the reamer with light downward pressure. Rotate the reamer smoothly. **DO NOT** apply too much pressure, see Figures 9-67 and 9-68.

FIGURE 9-67 Lower Steering Knuckle in Vise

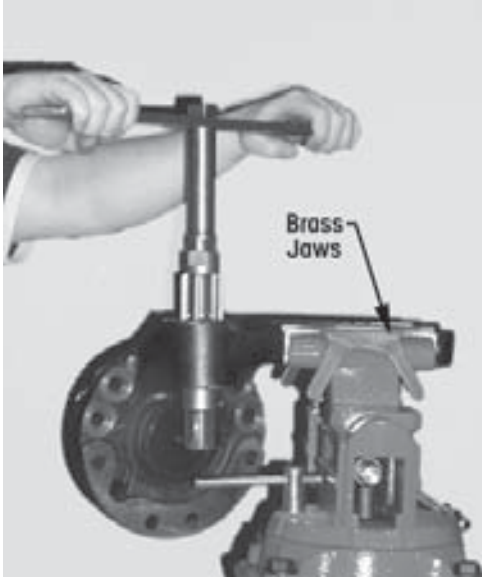

FIGURE 9-68 Upper Steering Knuckle in Vise

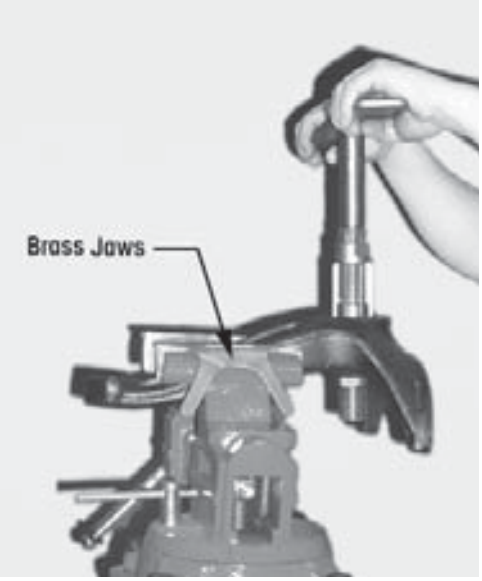

4. Slide the reamer out of the bottom of the steering knuckle assembly. If it is necessary to remove the reamer from the top, rotate the reamer opposite of cutting rotation.
5. Clean and remove all kingpin bushing material from the steering knuckle assembly. Take special attention to remove material from the grease channels and dimples.
6. Clean the 5/8" brake backing plate bolts with a wire wheel and run a tap through the threads of the lower steering knuckle assembly and then flush out with brake cleaner and dry with compressed air.

WARNING

PRIOR TO INSTALLATION ENSURE THAT ALL RESIDUAL LOCTITE® MATERIAL IS REMOVED FROM THE MOUNTING BOLTS AND THE THREAD BORES IN THE UPPER STEERING KNUCKLES, AND NEW LOCTITE 277 OR EQUIVALENT IS APPLIED TO HELP ENSURE THAT THE BOLTS SUSTAIN THE PROPER TORQUE REQUIREMENT. FAILURE TO DO SO CAN CAUSE LOSS OF VEHICLE CONTROL RESULTING IN PERSONAL INJURY OR PROPERTY DAMAGE.

NOTE

The Hendrickson Genuine part, socket head cap screw comes with a pre-applied loctite compound.

7. Install the upper and lower steering knuckle on the kingpin.
8. Check for the proper fit by rotating the knuckle assembly back and forth to verify there is no binding on the kingpin, see Figures 9-69 and 9-70.
9. If the bushing is too tight repeat Steps 1 through 8 until the proper clearance is achieved.

NOTE

Bushing size is to be 0.001" larger than the kingpin size.

FIGURE 9-69

FIGURE 9-70

KINGPIN SEAL INSTALLATION

1. Place the steering knuckle assembly in a vise with brass jaws or place on a suitable workbench. The steering knuckle will have the machined surface facing up (axle side up).
2. Lay the kingpin seal into the bore of the steering knuckle. The seal lip should face outward or toward the axle.
3. Use a bushing driver tool and press seal firmly into the steering knuckle assembly.
4. Install the kingpin seal until it makes contact with the kingpin bushing, see Figures 9-71 and 9-72.

FIGURES 9-71 AND 9-72

STEERING KNUCKLE ASSEMBLY

ASSEMBLY

After replacement of the kingpin bushings it is necessary to re-assemble the steering knuckle assemblies. The STEERTEK axle is equipped with two different thrust bearings installed. The composite thrust bearing is installed on the left side of the axle. The roller bearing is installed on the right side of the axle, see Figures 9-73 and 9-74, for right hand drive axle configuration the thrust bearings will be the opposite. **DO NOT** substitute aftermarket components when servicing.

1. Install the thrust bearing on the lower kingpin with the seal facing up toward axle (the black seal will designate the top side). The composite thrust bearing is installed on the left side of the axle. The roller bearing is installed on the right side of the axle, see Figures 9-73 and 9-74. For right hand drive axle configuration the thrust bearings will be the opposite.
2. Install the shim on the upper kingpin.
3. Pack the bushing dimples on the upper and lower steering knuckles with multi purpose Lithium based grease (NLGI Grade 2) before installation, see Figures 9-73 and 9-74.
4. Install the upper steering knuckle on the upper arm kingpin.
5. Install the lower steering knuckle on the lower kingpin and install the old socket head cap screws loose into the top two threaded holes.

FIGURE 9-73

FIGURE 9-74

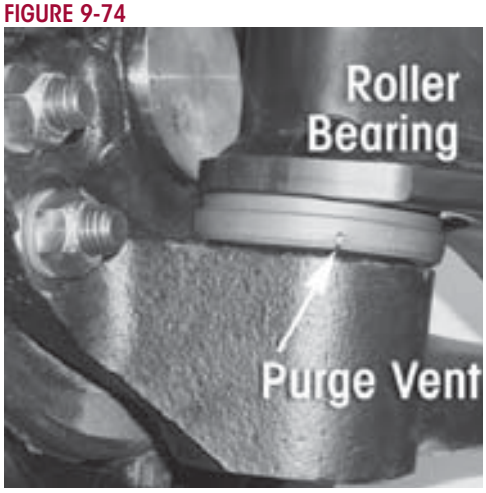

SERVICE HINT

The easiest way to achieve this is with the grease caps not installed in the knuckle assemblies. This eliminates back pressure. The assembly can then freely slide up and down on the kingpin. If the grease caps are still installed, remove the grease zerks to avoid creating back pressure. Grease zerks will be re-installed at the end of the procedure.

6. Install a bottle jack under the lower knuckle and slightly raise the knuckle until it is possible to thread in the (3) brake backing plate bolts by hand. These are for guide purposes only.
7. Snug the two socket head cap screws.
8. Lower the bottle jack so that all the vertical clearance is on the underside of the axle.
9. Affix a magnetic base dial indicator on the axle and place the tip of the dial indicator on top of the knuckle assembly, see Figure 9-75.
10. Zero the dial indicator.
11. Raise the bottle jack until there is no clearance between the knuckle assembly and the bottom of the axle, slightly lifting the axle.
12. Check the reading on the dial indicator. The specification for vertical travel on the steering knuckle during assembly is 0.008" to 0.011".
13. If the clearance is above 0.011", loosen the socket head cap screws and push down on the knuckle assembly until the proper vertical clearance is achieved. Add (0.005") shim if necessary.

FIGURE 9-75

Vertical End Play

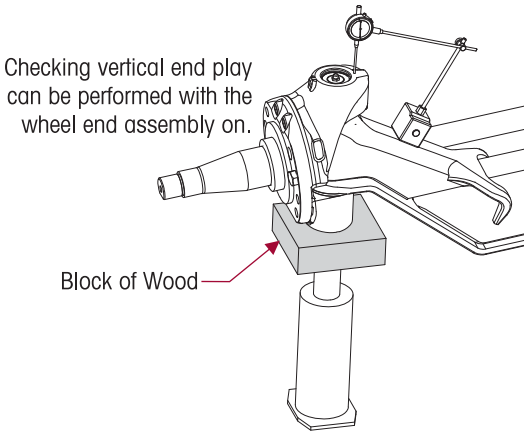

14. If the clearance is below the 0.008", loosen the two socket head cap screws and pull up on the knuckle assembly until the proper vertical clearance is achieved. If the 0.008" minimum clearance is unattainable it may be necessary to remove a 0.005" shim.

NOTE

The ⊞ Hendrickson Genuine part, socket head cap screw comes with a pre-applied loctite compound.

⚠ WARNING

PRIOR TO INSTALLATION ENSURE THAT ALL RESIDUAL LOCTITE MATERIAL IS REMOVED FROM THE MOUNTING BOLTS AND THE THREAD BORES IN THE UPPER STEERING KNUCKLE, AND NEW LOCTITE 277 OR EQUIVALENT IS APPLIED TO HELP ENSURE THAT THE BOLTS SUSTAIN THE PROPER TORQUE REQUIREMENT. FAILURE TO DO SO CAN CAUSE LOSS OF VEHICLE CONTROL RESULTING IN PERSONAL INJURY OR PROPERTY DAMAGE.

15. Remove one old socket head cap screw and replace with new socket head cap screw.
16. Remove second socket head cap screw and replace with new socket head cap screw. Tighten both socket head cap screws to 🔧 175-200 foot pounds torque.
17. Recheck the vertical clearance with the dial indicator or a 0.010" feeler gauge, see Figure 9-75.
18. Remove the brake spider bolts, they should thread out freely.
19. Remove the bottle jack and continue assembling the wheel ends.

IMPORTANT NOTE

Loctite applied to the three brake spider bolts is a critical procedure to ensure that these bolts sustain the torque requirement of Steering knuckle assembly.

20. Apply loctite to the three brake spider bolts prior to installation into the brake spider. Tighten bolts to 🔧 175-200 foot pounds torque.

WARNING

DO NOT GREASE KNUCKLES WITHOUT THE BRAKE SPIDER INSTALLED AND TIGHTENED TO PROPER TORQUE. FAILURE TO DO SO CAN CAUSE COMPONENT DAMAGE RESULTING IN FAILURE AND LOSS OF VEHICLE CONTROL, POSSIBLY CAUSING PERSONAL INJURY OR PROPERTY DAMAGE.

21. Install the tie rod end into the lower steering knuckle arm.
22. Tighten the castle nuts to 185 foot pounds torque then rotate the castle nut to the next castle slot and install cotter pin.
23. Install the drag link into the steering arm and tighten to the vehicle manufacturer's specifications.
24. Install new o-rings on the grease caps and lubricate o-rings with grease.
25. Install grease caps and new retaining rings.
26. Install brakes, drums, wheels and tires.
27. Remove jack and safety stands.
28. Grease steering knuckles with the vehicle on the floor.
29. Remove wheel chocks.

TIE ROD END AND CROSS TUBE

NOTE: Hendrickson supplies different tie rod configurations. Prior to ordering find the part number on the tie rod tube. For additional information see Technical Bulletin SEU-0223 or contact Hendrickson Truck Parts for corresponding kit numbers.

DISASSEMBLY

1. Chock the wheels.
2. Position the steer axle tires straight ahead.
3. Remove the cotter pin and castle nut.
4. Lightly tap the side of the Ackermann arm to loosen the tie rod end from the Ackermann arm, see Figure 9-76.

FIGURE 9-76

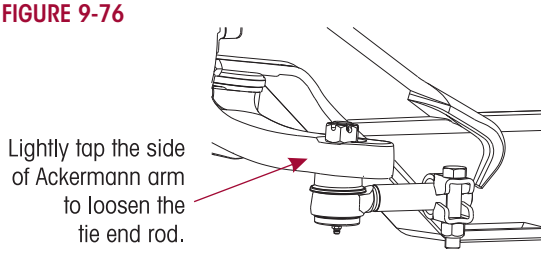

5. Repeat to Steps 3 and 4 to remove the other tie rod end.
6. Remove the cross tube and tie rod ends from the vehicle.
7. Mount the cross tube in a soft jaw vice.
8. Remove the hardware from the clamp on the cross tube.
9. Count the exposed threads on the tie rod end being replaced.
10. Remove the tie rod end from the cross tube.

WARNING

DO NOT HEAT THE CROSS TUBE WITH A TORCH TO FACILITATE THE REMOVAL OF THE TIE ROD END. THE USE OF SUCH HEAT CAN ADVERSELY AFFECT THE STRENGTH OF THE CROSS TUBE. A COMPONENT DAMAGED IN THIS MANNER WILL RESULT IN LOSS OF WARRANTY, AND CAN RESULT IN THE AND LOSS OF VEHICLE CONTROL, AND POSSIBLE PERSONAL INJURY OR PROPERTY DAMAGE.

11. If the opposing tie rod end is being replaced repeat Steps 8 through 10.
12. Inspect the cross tube for dents, cracks, or thread damage. Replace the cross tube if needed.

ASSEMBLY

1. Lubricate the new tie rod end threads with Anti-Seize.

NOTE

When installing the cross tube the thread direction of the tie rod ends are as follows:
- A right hand threaded tie rod end will be installed into the right side Ackermann arm.
- A left hand threaded tie rod end will be installed into the left side Ackermann arm.

2. Install the new tie rod end into the cross tube, leaving the same amount of threads exposed that were counted on the failed tie rod end prior to removal.

WARNING

THE THREADED PORTION OF THE TIE ROD END MUST EXTEND PAST THE SLOTS INTO THE TIE ROD CROSS TUBE, SEE FIGURE 9-77. FAILURE TO DO SO CAN CAUSE COMPONENT DAMAGE, LOSS OF VEHICLE CONTROL AND POSSIBLE PERSONAL INJURY OR PROPERTY DAMAGE.

FIGURE 9-77

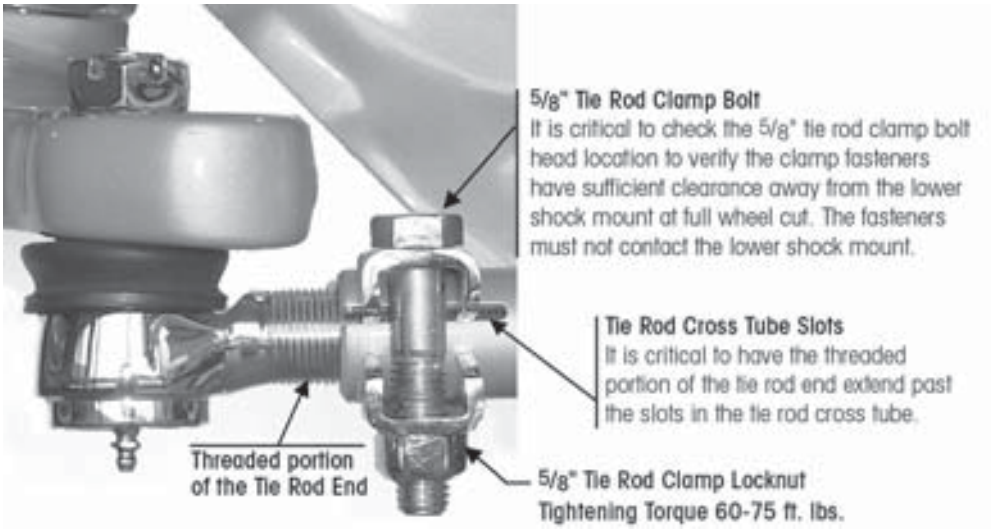

WARNING

IT IS CRITICAL TO CHECK THE 5/8" TIE ROD CLAMP BOLT HEAD LOCATION TO VERIFY THE CLAMP FASTENERS HAVE SUFFICIENT CLEARANCE AWAY FROM THE LOWER SHOCK MOUNT AT FULL WHEEL CUT. THE FASTENERS MUST NOT CONTACT THE LOWER SHOCK MOUNT. FAILURE TO DO SO CAN CAUSE ONE OR MORE COMPONENTS TO FAIL CAUSING LOSS OF VEHICLE CONTROL AND POSSIBLE PERSONAL INJURY OR PROPERTY DAMAGE.

3. Replace the opposing tie rod end if necessary by repeating Steps 2 and 3.

WARNING

DO NOT HEAT THE CROSS TUBE WITH A TORCH TO ROTATE THE CROSS TUBE IN THE TIE ROD END. THE USE OF SUCH HEAT CAN ADVERSELY AFFECT THE STRENGTH OF THE CROSS TUBE. A COMPONENT DAMAGED IN THIS MANNER WILL RESULT IN LOSS OF WARRANTY, AND CAN RESULT IN THE LOSS OF VEHICLE CONTROL, AND POSSIBLE LOWER STEERING KNUCKLE PERSONAL INJURY OR PROPERTY DAMAGE.

4. If replacing opposing tie rod end, it is critical that the cross tube will rotate in the opposing tie rod end.
5. Install the cross tube into the Ackermann arms.
6. Tighten the castle nuts to 185 foot pounds torque then rotate the castle nut to the next castle slot and install cotter pin.
7. Grease tie rod ends, see Lubrication Chart for required lubricant in the Preventive Maintenance Section of this publication.
8. Set the toe, (see the Toe Adjustment Procedure in the Alignment & Adjustments Section of this publication).
9. Remove the wheel chocks.

SECTION 10
Plumbing Diagrams

AIRTEK SINGLE HEIGHT CONTROL VALVE – 10K

When replacing or installing nylon air line tubing into quick-connect fittings it is critical that the end of the air line is cut square. Improper cut of the end of the air line tubing can cause the air line to seat improperly in the quick connect fitting causing air leakage.

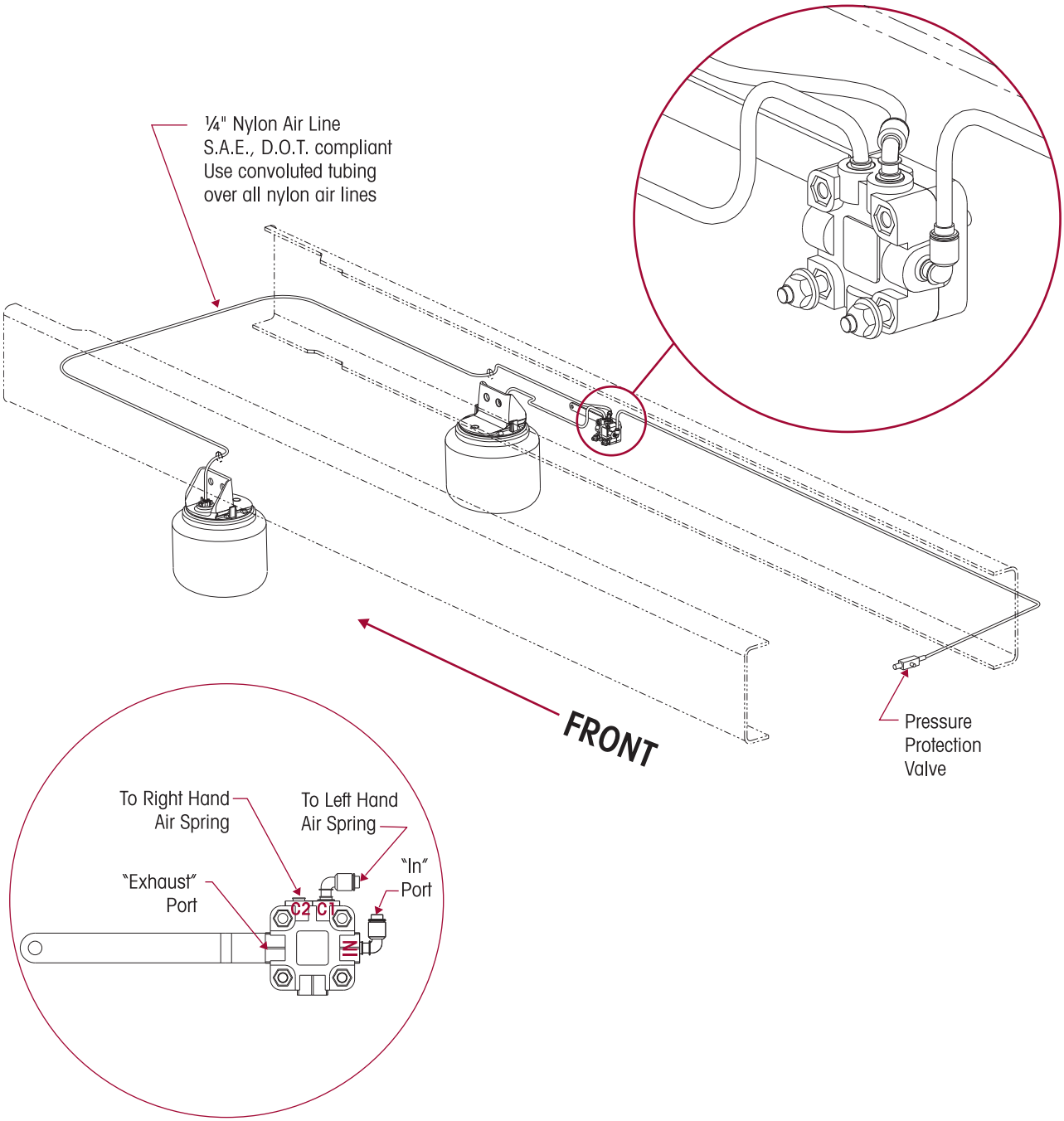

AIRTEK DUAL HEIGHT CONTROL VALVES – 14.6K

When replacing or installing nylon air line tubing into quick-connect fittings it is critical that the end of the air line is cut square. Improper cut of the end of the air line tubing can cause the air line to seat improperly in the quick connect fitting causing air leakage.

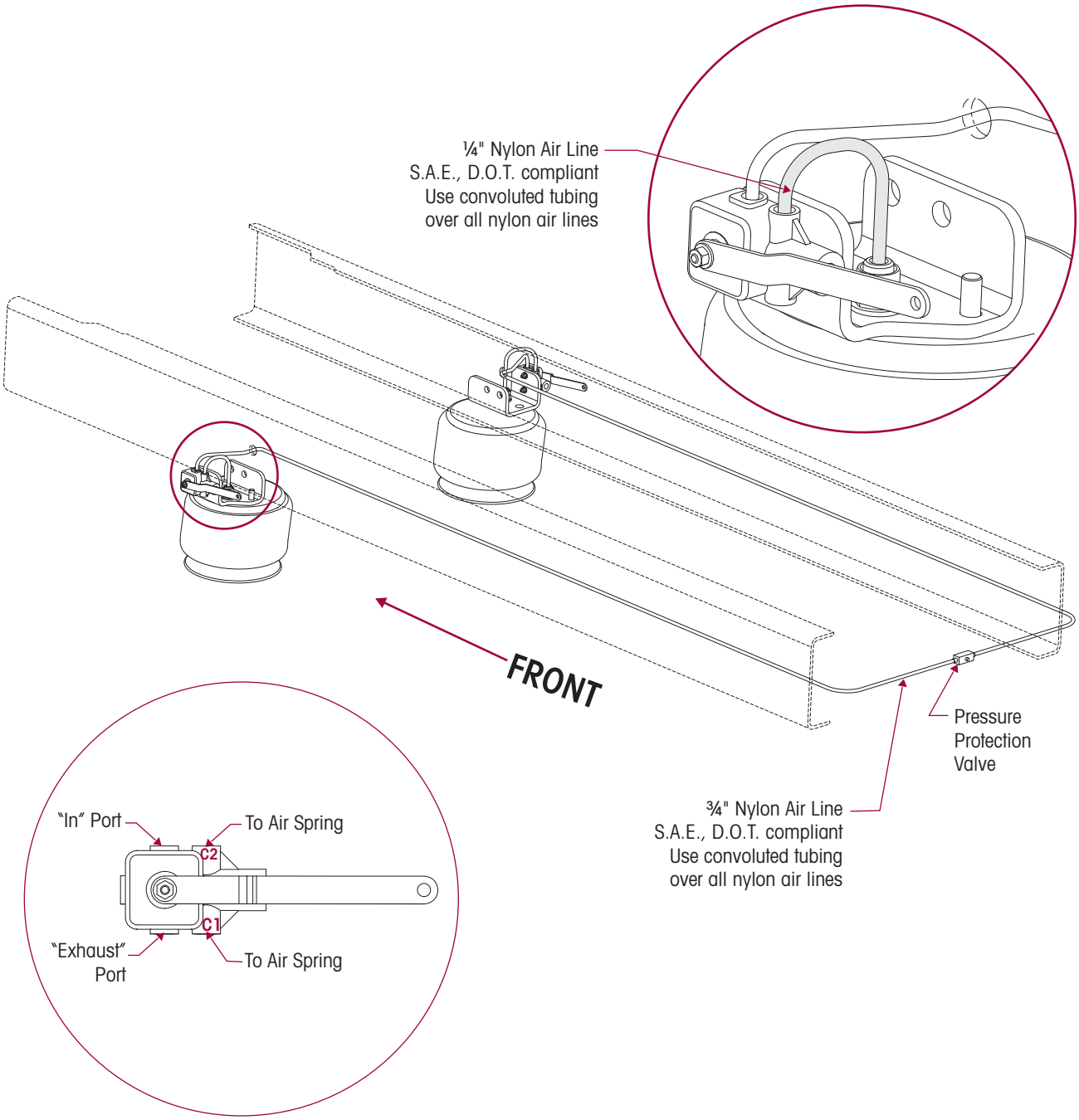

SECTION 11
Troubleshooting Guide

AIRTEK/SOFTEK for Blue Bird Buses

TROUBLESHOOTING GUIDE		
CONDITION	**POSSIBLE CAUSE**	**CORRECTION**
Worn or damaged kingpins and kingpin bushings	Dirt in system– contaminated lubricant	Polish and inspect kingpin, replace bushing and seals, then follow specified lubrication procedures
	Incorrect lubricant	Lubricate axle with specified lubricant
	Axle not lubricated at scheduled frequency	Lubricant axle at scheduled frequency
	Incorrect lubrication procedures	Use correct lubrication procedures
	Lubrication interval not compatible with operating conditions	Change lubrication interval to match operating conditions
	Worn or missing seals	Replace worn or missing seals
Vibration or shimmy of front axle during operation	Caster out of specification	Set proper ride height then adjust caster to specification
	Wheels and/or tires out of balance	Balance or replace wheels and/or tires
	Worn shock absorbers	Replace shock absorbers
	Worn thrust washers (if equipped) and rear hanger clamps	Replace thrust washers (if equipped) and rear hanger clamps
	Broken engine mount	Replace engine mount
	Wheel bearing adjustment	Adjust wheel bearing to the vehicle manufacturers specifications.
Excessive wear on tires or uneven tire tread wear	Tires have incorrect air pressure	Adjust tire pressure to manufacturer's specification.
	Tires out of balance	Balance or replace tires
	Incorrect tandem axle alignment	Align tandem axles
	Incorrect toe setting	Adjust toe-in to manufacturer's specification
	Incorrect steering arm geometry	Repair steering system as necessary
	Worn kingpin bushings	Replace kingpin bushings
	Excessive wheel bearing end play	Check specified wheel nut torque, replace worn or damaged wheel bearings
	Wheel bearing adjustment	Adjust wheel bearing to the vehicle manufacturers specifications.
Vehicle is hard to steer	Low pressure in the power steering system	Repair power steering system
	Steering linkage needs lubrication	Lubricate steering linkage
	Steering knuckles are binding	Check vertical clearance
	Incorrect steering arm geometry	Repair steering system as necessary
	Caster out of specification	Set proper ride height then adjust caster to specification
	Tie rod ends hard to move	Replace tie rod ends
	Worn thrust bearing	Replace thrust bearing
	Steering gear box internal problem	Perform steering gear trouble shooting procedures per steering gear manufacturing guidelines.

AIRTEK/SOFTEK for Blue Bird Buses

TROUBLESHOOTING GUIDE (CONTINUED)		
CONDITION	**POSSIBLE CAUSE**	**CORRECTION**
Tie rod ends are worn and require replacement	Tie rod ends need lubrication	Lubricate tie rod end. Make sure lubrication schedule is followed.
	Severe operating conditions	Increase frequency of inspection and lubrication intervals
	Damaged boot on tie rod end	Replace tie rod end
Bent or broken cross tube, tie rod end ball stud or tie rod end NOTE: Damaged components require replacement	Pump/gear relief valve pressure setting exceeds system specifications	Adjust power steering system to manufacturer's specified pressure
	Steering gear poppets improperly set or malfunctioning	Check for proper operation or adjust poppets to OEM specifications
	Axle stops improperly set	Set axle stops to OEM specifications
	Severe duty cycle service	Increase frequency of inspection and lubrication intervals
Worn or broken steering ball stud	Drag link fasteners lightened past specified torque	Tighten drag link fasteners to the specified torque
	Lack of lubrication or incorrect lubricant	Lubricate linkage with specified lubricant
	Power steering stops out of adjustment	Adjust steering stops to OEM specifications
Suspension has harsh or bumpy ride	Air spring not inflated	Check air supply to air spring, repair as necessary
	Air spring ride height out of specification	Adjust ride height to proper specification
	Broken or worn leaf spring	Replace leaf spring
	Front suspension overloaded	Redistribute steer axle load
Restricted steering radius	Steering stops not adjusted correctly	Adjust steering stops to achieve correct wheel cut
Vehicle leans	Ride height incorrect	Adjust ride height to specification
	Air spring(s) are not inflated	Repair source of air pressure loss
	Suspension is not torqued correctly at installation	Perform spring eye re-torque procedure. See Torque Specification Section of this publication
	Leaf spring broken	Replace leaf spring
	Excessive weight bias	Contact the vehicle manufacturer or Hendrickson Tech Services
Vehicle wanders	Caster out of specifications	Set proper ride height then adjust caster to specification
	Incorrect toe setting	Adjust toe to specification
	Fifth wheel not greased	Grease fifth wheel
	Air in the power steering system	Remove air form the power steering systems
	Rear ride height out of adjustment	Adjust ride height to specification
	Front ride height out of adjustment	Adjust ride height to specification

Torque Specifications

AIRTEK for Blue Bird Vision Buses
10K Capacity

HENDRICKSON RECOMMENDED TORQUE VALUES PROVIDED IN FOOT POUNDS

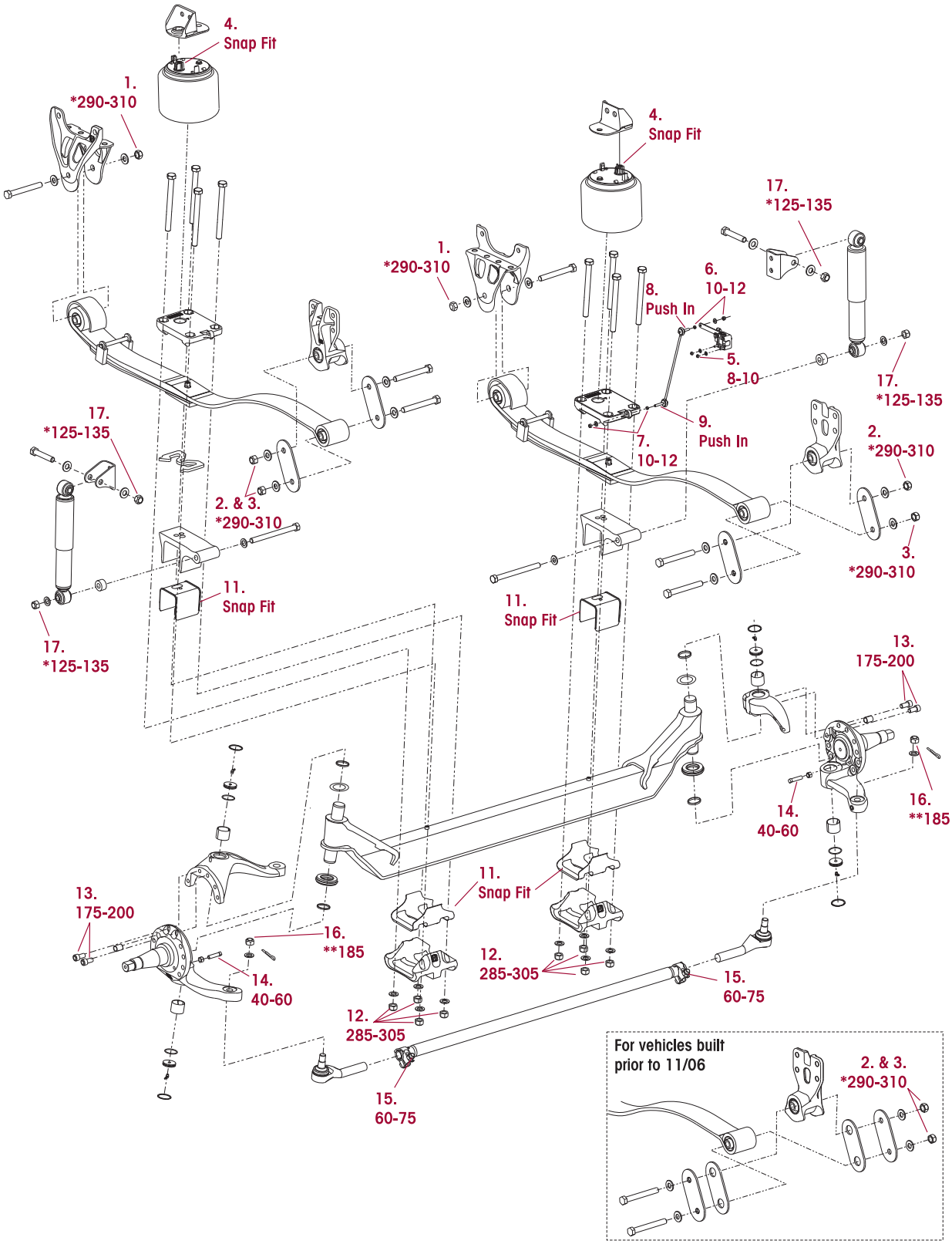

AIRTEK for Blue Bird Vision Buses – 10K

HENDRICKSON RECOMMENDED TORQUE SPECIFICATIONS				
NO.	COMPONENT	QTY.	SIZE	TORQUE VALUE (in foot pounds)
1	Front Frame Hanger to Front Leaf Spring Eye	2	M20	*290-310
2	Rear Shackle Bracket to Shackle Plate	2	M20	*290-310
3	Rear Shackle Bracket to Spring Eye	2	M20	*290-310
4	Air Spring	2	Self-Locking	Snap Fit
5	Height Control Valve to Frame	2	¼″	8-10
6	HCV Linkage to HCV Arm	2	5/16″	10-12
7	HCV Linkage to Top Pad	2	5/16″	10-12
8	HCV Linkage Grommet to HCV Arm	1	Grommet	Push In
9	HCV Linkage Grommet to Top Pad	1	Grommet	Push In
10	Spring Center Aligning Dowel Pin (Flat Floor Bus)	2	¾″	***Loose Fit
11	Axle Wrap Liners for Clamp Group	2	Formed	Snap Fit
	⚠ WARNING DO NOT ASSEMBLE CLAMP GROUP WITHOUT AXLE WRAP LINERS. FAILURE TO DO SO CAN CAUSE LOSS OF VEHICLE CONTROL, PROPERTY DAMAGE OR PERSONAL INJURY.			
12	Clamp Group Hardware	8	¾″	285-305
	⚠ WARNING ENSURE CLAMP GROUP IS ALIGNED PROPERLY PRIOR TO TIGHTENING HARDWARE. FAILURE TO DO SO CAN CAUSE LOSS OF VEHICLE CONTROL, PROPERTY DAMAGE OR PERSONAL INJURY.			
13	Knuckle Attachment Bolt (Socket Head Cap Screw)	4	⅝″	175-200
14	Knuckle / Axle Wheel Stop Bolt	2	⅝″ Jam Nut	40-60
15	Tie Rod Tube to Tie Rod Ends	2	⅝″	60-75
16	Tie Rod Ends to Lower Steering Knuckle	2	⅞″ Castle Nut	**185
17	Shocks Eye Bolts	2	¾″	*125-135
•	All hardware ¼″ and greater is Grade 8 with no additional lubrication. Frame mount hardware in most cases are Huck style fasteners supplied by the OEM.			

NOTE: * All hardware information in gray in the matrix denotes recommended torques for fasteners originally supplied by the vehicle manufacturer. If Hendrickson supplied fasteners are used, tighten to Hendrickson torque values, if non Hendrickson fasteners are used, follow torque specifications listed in the vehicle manufacturer's service manual. Hendrickson is not responsible for maintaining vehicle manufacturer's torque values.

** Torque to 185 foot lbs., advance nut to next hex face to install cotter pin. Do not back off nut for cotter pin installation.

*** Denote items not shown on illustration.

MODEL	AIRTEK		COMFORT AIR	
Blue Bird	RIDE HEIGHT	SHOCK ABSORBER LENGTH	RIDE HEIGHT	SHOCK ABSORBER LENGTH
	From the bottom of the frame to the center of axle	At ride height with a tolerance of ¼″	From the bottom of the frame to the bottom of the main support member.	At ride height with a tolerance of ¼″
Vision 10K	12½″	18 9/16″	4⅞″	22¾″

8K/10K Capacity

HENDRICKSON RECOMMENDED TORQUE VALUES PROVIDED IN FOOT POUNDS

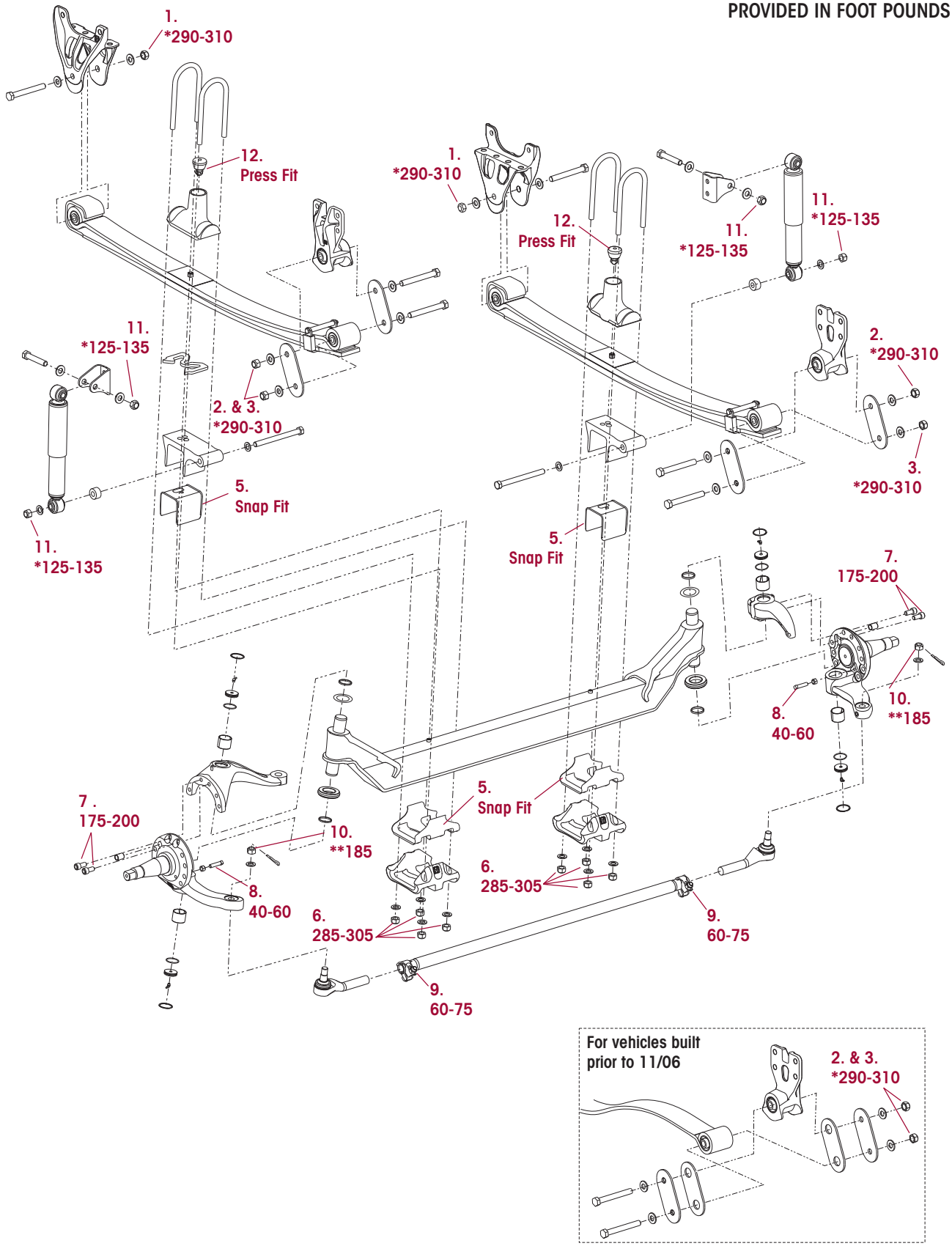

SOFTEK for Blue Bird Vision Buses – 8K/10K

HENDRICKSON RECOMMENDED TORQUE SPECIFICATIONS				
NO.	COMPONENT	QTY.	SIZE	TORQUE VALUE (in foot pounds)
1	Front Frame Hanger to Front Leaf Spring Eye	2	M20	*290-310
2	Rear Shackle Bracket to Shackle Plate	2	M20	*290-310
3	Rear Shackle Bracket to Spring Eye	2	M20	*290-310
4	Spring Center Aligning Dowel Pin (Flat Floor Bus)	2	¾″	***Loose Fit
5	Axle Wrap Liners for Clamp Group	2	Formed	Snap Fit
	⚠ WARNING DO NOT ASSEMBLE CLAMP GROUP WITHOUT AXLE WRAP LINERS. FAILURE TO DO SO CAN CAUSE LOSS OF VEHICLE CONTROL, PROPERTY DAMAGE OR PERSONAL INJURY.			
6	Clamp Group Hardware	8	¾″	285-305
	⚠ WARNING ENSURE CLAMP GROUP IS ALIGNED PROPERLY PRIOR TO TIGHTENING HARDWARE. FAILURE TO DO SO CAN CAUSE LOSS OF VEHICLE CONTROL, PROPERTY DAMAGE OR PERSONAL INJURY.			
7	Knuckle Attachment Bolt (Socket Head Cap Screw)	4	⅝″	175-200
8	Knuckle / Axle Wheel Stop Bolt	2	⅝″ Jam Nut	40-60
9	Tie Rod Tube to Tie Rod Ends	2	⅝″	60-75
10	Tie Rod Ends to Lower Steering Knuckle	2	⅞″ Castle Nut	**185
11	Shocks Eye Bolts	4	¾″	*125-135
12	Rubber Axle Stop	2	—	Press Fit

• All hardware ¼″ and greater is Grade 8 with no additional lubrication.
Frame mount hardware in most cases are Huck style fasteners supplied by the OEM.

NOTE: * All hardware information in gray in the matrix denotes recommended torques for fasteners originally supplied by the vehicle manufacturer. If Hendrickson supplied fasteners are used, tighten to Hendrickson torque values, if non Hendrickson fasteners are used, follow torque specifications listed in the vehicle manufacturer's service manual. Hendrickson is not responsible for maintaining vehicle manufacturer's torque values.

** Torque to 185 foot lbs., advance nut to next hex face to install cotter pin. Do not back off nut for cotter pin installation.

*** Denote items not shown on illustration.

14.6K Capacity

HENDRICKSON RECOMMENDED TORQUE VALUES PROVIDED IN FOOT POUNDS

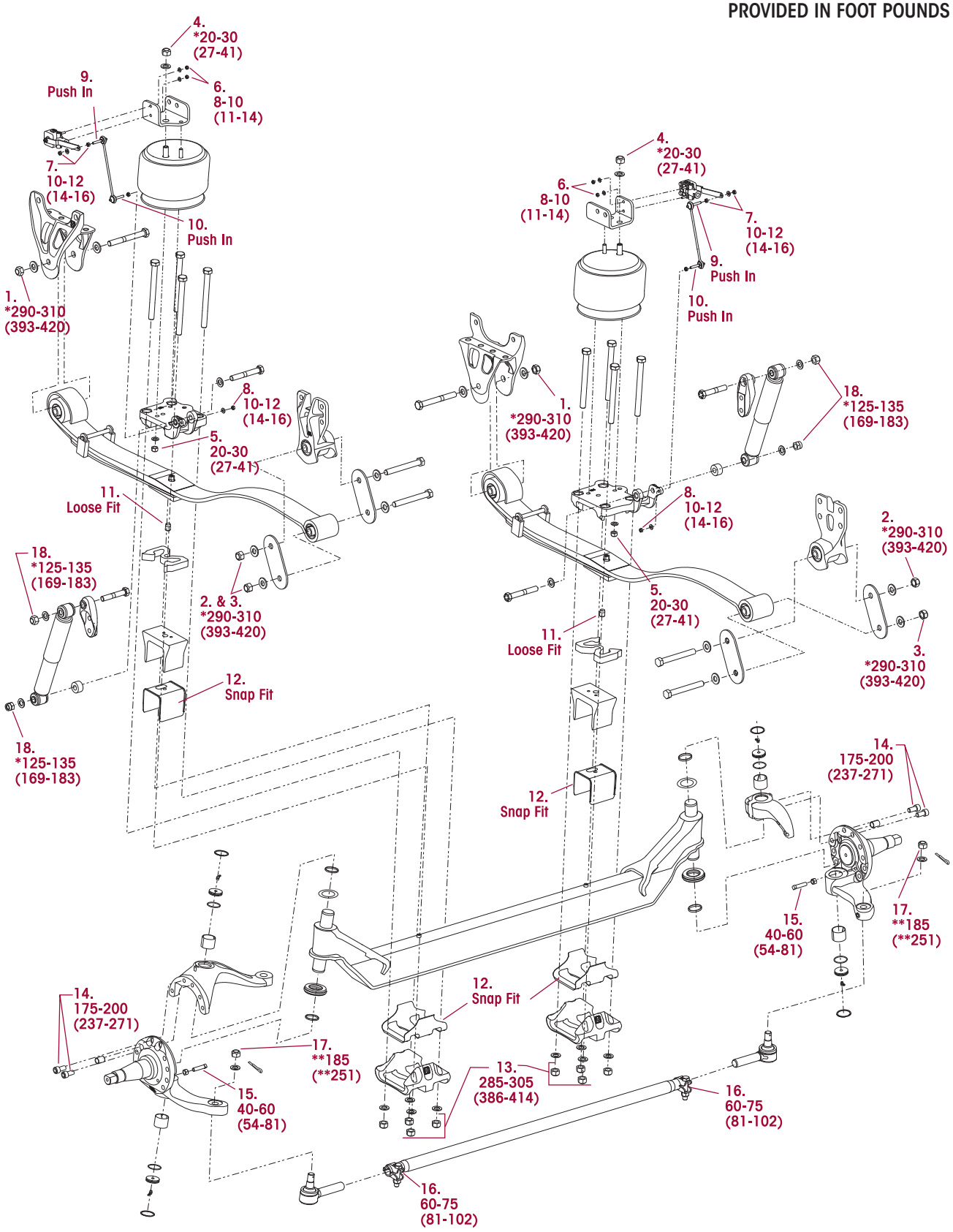

AIRTEK for Blue Bird All American Buses – 14.6K

HENDRICKSON RECOMMENDED TORQUE SPECIFICATIONS					
NO.	COMPONENT	QTY.	SIZE	TORQUE VALUE (in foot pounds)	TORQUE VALUE (in Nm)
1	Front Frame Hanger to Front Leaf Spring Eye	2	M20	*290-310	*393-420
2	Rear Shackle Bracket to Shackle Plate	2	M20	*290-310	*393-420
3	Rear Shackle Bracket to Spring Eye	2	M20	*290-310	*393-420
4	Air Spring to Air Spring Bracket	2	¾″	*20-30	*27-41
5	Air Spring to Top Pad	2	½″	20-30	27-41
6	Height Control Valve to Air Spring Bracket	2	¼″	8-10	11-14
7	HCV Linkage to HCV Arm	2	5/16″	10-12	14-16
8	HCV Linkage to Top Pad	2	5/16″	10-12	14-16
9	HCV Linkage Grommet to HCV Arm	1	Grommet	Push In	
10	HCV Linkage Grommet to Top Pad	1	Grommet	Push In	
11	Spring Center Aligning Dowel Pin (Flat Floor Bus)	2	¾″	Loose Fit	
12	Axle Wrap Liners for Clamp Group	2	Formed	Snap Fit	
	⚠ WARNING DO NOT ASSEMBLE CLAMP GROUP WITHOUT AXLE WRAP LINERS. FAILURE TO DO SO CAN CAUSE LOSS OF VEHICLE CONTROL, PROPERTY DAMAGE OR PERSONAL INJURY.				
13	Clamp Group Hardware	8	¾″	285-305	386-414
	⚠ WARNING ENSURE CLAMP GROUP IS ALIGNED PROPERLY PRIOR TO TIGHTENING HARDWARE. FAILURE TO DO SO CAN CAUSE LOSS OF VEHICLE CONTROL, PROPERTY DAMAGE OR PERSONAL INJURY.				
14	Knuckle Attachment Bolt (Socket Head Cap Screw)	4	⅝″	175-200	237-271
15	Knuckle / Axle Wheel Stop Bolt	2	⅝″ Jam Nut	40-60	54-81
16	Tie Rod Tube to Tie Rod Ends	2	⅝″	60-75	81-102
17	Tie Rod Ends to Lower Steering Knuckle	2	⅞″ Castle Nut	**185	**251
18	Shocks Eye Bolts	2	¾″	*125-135	*169-183

• All hardware ¼″ and greater is Grade 8 with no additional lubrication.
Frame mount hardware in most cases are Huck style fasteners supplied by the OEM.

NOTE: * All hardware information in gray in the matrix denotes recommended torques for fasteners originally supplied by the vehicle manufacturer. If Hendrickson supplied fasteners are used, tighten to Hendrickson torque values, if non Hendrickson fasteners are used, follow torque specifications listed in the vehicle manufacturer's service manual. Hendrickson is not responsible for maintaining vehicle manufacturer's torque values.

** Torque to 185 foot pounds (251 Nm), advance nut to next hex face to install cotter pin. Do not back off nut for cotter pin installation.

MODEL	AIRTEK		COMFORT AIR	
Blue Bird	RIDE HEIGHT	SHOCK ABSORBER LENGTH	RIDE HEIGHT	SHOCK ABSORBER LENGTH
	From the bottom of the frame to the center of axle	At ride height with a tolerance of ¼″	From the bottom of the frame to the bottom of the main support member.	At ride height with a tolerance of ¼″
All American Front Engine Model	14⅞″	17¼″	4⅞″	22¾″
All American Rear Engine Model	14⅞″	17 15/32″		

13.2K/14.6K Capacity

HENDRICKSON RECOMMENDED TORQUE VALUES PROVIDED IN FOOT POUNDS

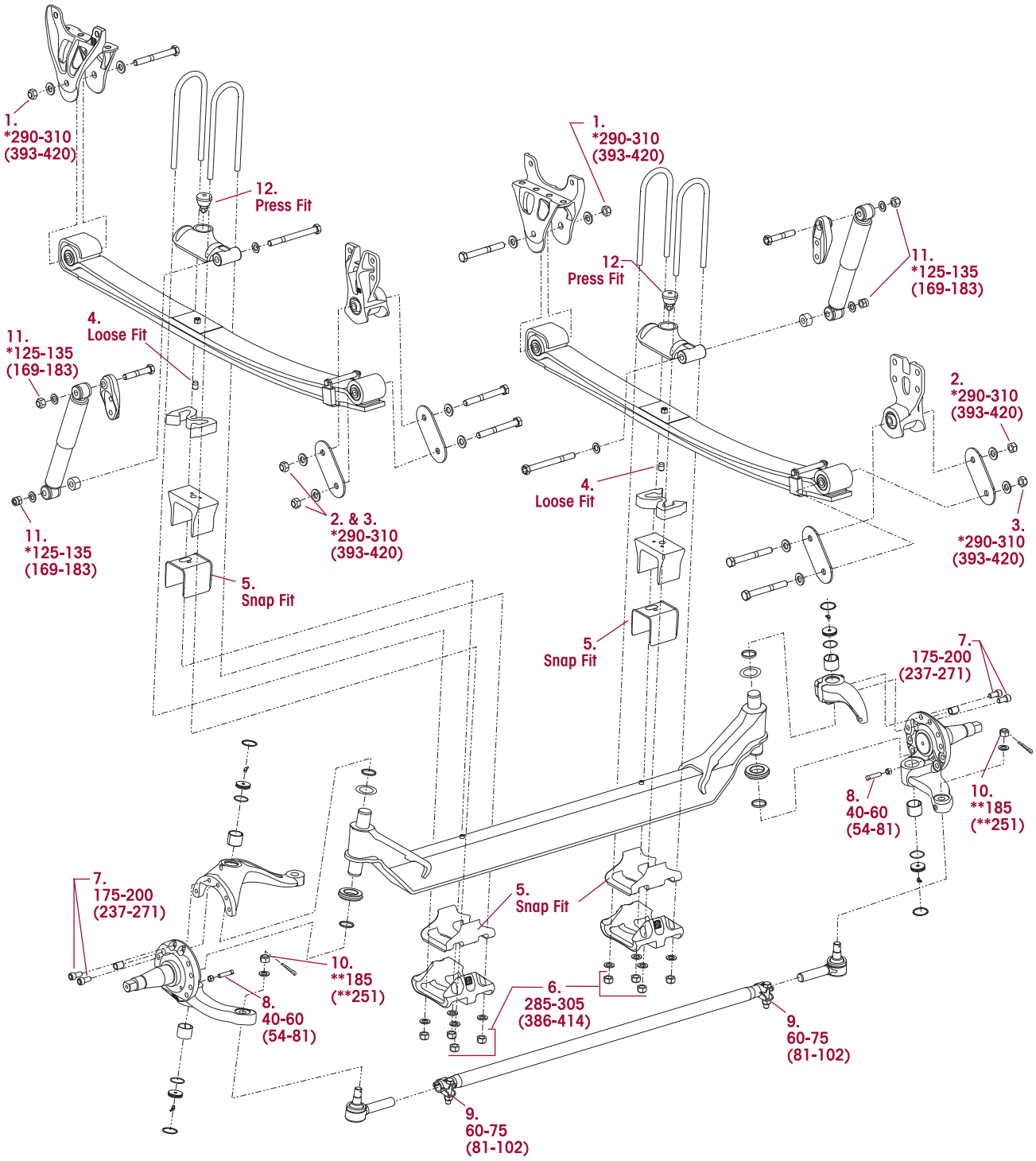

SOFTEK for Blue Bird All American Buses – 13.2K/14.6K

HENDRICKSON RECOMMENDED TORQUE SPECIFICATIONS					
NO.	COMPONENT	QTY.	SIZE	TORQUE VALUE (in foot pounds)	TORQUE VALUE (in Nm)
1	Front Frame Hanger to Front Leaf Spring Eye	2	M20	*290-310	*393-420
2	Rear Shackle Bracket to Shackle Plate	2	M20	*290-310	*393-420
3	Rear Shackle Bracket to Spring Eye	2	M20	*290-310	*393-420
4	Spring Center Aligning Dowel Pin (Flat Floor Bus)	2	¾″	Loose Fit	
5	Axle Wrap Liners for Clamp Group	2	Formed	Snap Fit	
	⚠ WARNING DO NOT ASSEMBLE CLAMP GROUP WITHOUT AXLE WRAP LINERS. FAILURE TO DO SO CAN CAUSE LOSS OF VEHICLE CONTROL, PROPERTY DAMAGE OR PERSONAL INJURY.				
6	Clamp Group Hardware	8	¾″	285-305	386-414
	⚠ WARNING ENSURE CLAMP GROUP IS ALIGNED PROPERLY PRIOR TO TIGHTENING HARDWARE. FAILURE TO DO SO CAN CAUSE LOSS OF VEHICLE CONTROL, PROPERTY DAMAGE OR PERSONAL INJURY.				
7	Knuckle Attachment Bolt (Socket Head Cap Screw)	4	⅝″	175-200	237-271
8	Knuckle / Axle Wheel Stop Bolt	2	⅝″ Jam Nut	40-60	54-81
9	Tie Rod Tube to Tie Rod Ends	2	⅝″	60-75	81-102
10	Tie Rod Ends to Lower Steering Knuckle	2	⅞″ Castle Nut	**185	**251
11	Shocks Eye Bolts	4	¾″	*125-135	*169-183
12	Rubber Axle Stop	2	—	Press Fit	

• All hardware ¼″ and greater is Grade 8 with no additional lubrication.
Frame mount hardware in most cases are Huck style fasteners supplied by the OEM.

NOTE: * All hardware information in gray in the matrix denotes recommended torques for fasteners originally supplied by the vehicle manufacturer. If Hendrickson supplied fasteners are used, tighten to Hendrickson torque values, if non Hendrickson fasteners are used, follow torque specifications listed in the vehicle manufacturer's service manual. Hendrickson is not responsible for maintaining vehicle manufacturer's torque values.

** Torque to 185 foot pounds (251 Nm), advance nut to next hex face to install cotter pin. Do not back off nut for cotter pin installation.

SECTION 13
Front Wheel Alignment Specifications

AIRTEK for Blue Bird Buses

FRONT AIR MODULE SUSPENSION ALIGNMENT SPECIFICATION

CAMBER[1]	DESIGN SPECIFICATION	RANGE	
		MINIMUM	MAXIMUM
LEFT	0.00° ± 1.0°	-1.0°	+1.0°
RIGHT	- 0.25° ± 1.0°	-1.25°	+0.75°
CROSS	Max 2.0°	—	—

CAMBER NOTES:

1 The camber angle is not adjustable. Do not bend axle or otherwise try to adjust camber. If found out of specification, notify Hendrickson Tech Services for further information.

CASTER[1,2]	DESIGN SPECIFICATION	RANGE			
		10K		14.6K	
		MINIMUM	MAXIMUM	MINIMUM	MAXIMUM
LEFT	4.1° ± 1°	+3.1°	+5.1°	+3.1°	+5.1°
RIGHT	4.1° ± 1°	+3.1°	+5.1°	+3.1°	+5.1°
CROSS[3]	Max 1.0°	—	—	—	—

CASTER NOTES:

1 Caster is determined with the vehicle at specified ride height for air suspension or at rated load for mechanical suspension systems. It is critical that the vehicle front and rear ride height is within specifications prior to performing a caster measurement or adjustment. See Hendrickson ride height specifications and procedure.

2 In most cases actual vehicle caster is defined with the frame rails at zero slope. Refer to the vehicle manufacturer's specifications for correct frame rail slope. (Both the alignment surface and the vehicle's frame rails should be level during execution of alignment procedures). For vehicles with a positive frame rake (higher in rear) add the frame slope (in degrees) to the caster reading to determine true vehicle caster.

3 **The cross caster angle is not adjustable** – Do not bend axle or otherwise try to adjust cross caster. If found out of specifications notify Hendrickson Tech Services for further information. Changes to caster can be attained by using caster shims as provided by the vehicle manufacturer or chassis and body manufacturer. Caster shims must match, side to side, to reduce uneven loading to the suspension components. **The use of two different angle caster shims will not correct cross caster.**

4 **Example of caster adjustment:** 2.5° RH/3° LH, would require one, 1.0 shim on each side to increase caster and achieve 3.5° RH/4.0° LH, which is in specification. Do not attempt to use uneven shims.

Hendrickson recommends following TMC[2] practices:

	DESIGN SPECIFICATION[1]	RANGE	
		MINIMUM	MAXIMUM
TOTAL TOE[2]	1/16″ ± 1/32″ (0.06″ ± 0.03″)	1/32″ (0.03″)	3/32″ (0.09″)

TOE-IN NOTES:

1 Toe-in is to be set and adjusted in the normal vehicle unladed configuration. Actual vehicle curb weight on the ground. Toe should be checked at the tires front and rear tread center, at a distance above ground equal to the tire's rolling radius.

2 In most instances total toe is set by the vehicle manufacturer or body builder. Consult the vehicle manufacturer for specifications.

SOFTEK for Blue Bird Buses

FRONT AIR MODULE SUSPENSION ALIGNMENT SPECIFICATION

CAMBER[1]	DESIGN SPECIFICATION	RANGE	
		MINIMUM	MAXIMUM
LEFT	0.00° ± 1.0°	-1.0°	+1.0°
RIGHT	- 0.25° ± 1.0°	-1.25°	+0.75°
CROSS	Max 2.0°	—	—

CAMBER NOTES:

1 The camber angle is not adjustable. Do not bend axle or otherwise try to adjust camber. If found out of specification, notify Hendrickson Tech Services for further information.

CASTER[1,2]	DESIGN SPECIFICATION		RANGE			
			8K/10K		13.2K/14.6K	
	8K/10K	13.2K/14.6K	MINIMUM	MAXIMUM	MINIMUM	MAXIMUM
LEFT	4.5° ± 1°	4.5° ± 1.5°	+3.5°	+5.5°	+3.0°	+6.0°
RIGHT	4.5° ± 1°	4.5° ± 1.5°	+3.5°	+5.5°	+3.0°	+6.0°
CROSS[3]	Max 1.0°		—	—	—	—

CASTER NOTES:

1 Caster is determined with the vehicle at specified ride height for air suspension or at rated load for mechanical suspension systems. It is critical that the vehicle front and rear ride height is within specifications prior to performing a caster measurement or adjustment. See Hendrickson ride height specifications and procedure.

2 In most cases actual vehicle caster is defined with the frame rails at zero slope. Refer to the vehicle manufacturer's specifications for correct frame rail slope. (Both the alignment surface and the vehicle's frame rails should be level during execution of alignment procedures). For vehicles with a positive frame rake (higher in rear) add the frame slope (in degrees) to the caster reading to determine true vehicle caster.

3 **The Cross caster angle is not adjustable** – Do not bend axle or otherwise try to adjust cross caster. If found out of specifications notify Hendrickson Tech Services for further information. Changes to caster can be attained by using caster shims as provided by the vehicle manufacturer or chassis and body manufacturer. Caster shims must match, side to side, to reduce uneven loading to the suspension components. **The use of two different angle caster shims will not correct cross caster.**

4 **Example of caster adjustment:** 2.5° RH/3° LH, would require one, 1.0 shim on each side to increase caster and achieve 3.50° RH/4.00° LH, which is in specification. Do not attempt to use uneven shims.

Hendrickson recommends following TMC[2] practices:

	DESIGN SPECIFICATION[1]	RANGE	
		MINIMUM	MAXIMUM
TOTAL TOE[2]	1/16" ± 1/32" (0.06" ± 0.03")	1/32" (0.03")	3/32" (0.09")

TOE-IN NOTES:

1 Toe-in is to be set and adjusted in the normal vehicle unladed configuration. Actual vehicle curb weight on the ground. Toe should be checked at the tires front and rear tread center, at a distance above ground equal to the tire's rolling radius.

2 In most instances total toe is set by the vehicle manufacturer or body builder. Consult the vehicle manufacturer for specifications.

SECTION 14
Reference Material

This technical publication covers Hendrickson Truck Suspension's recommended procedures for our parts/products. Other components play a major role in overall performance and Hendrickson recommends you follow the specific vehicle manufacturer's recommendation for care and maintenance. Some recommended procedures have been developed by The Technology & Maintenance Council (TMC) and Hendrickson supports these recommendations. We have compiled a list of these below.

TMC

To obtain copies of the following RP's, video's, or charts, contact TMC at:

TMC/ATA
2200 Mill Road
Alexandria, VA 22314

Phone: 703-838-1763
website: tmc.truckline.com
online ordering: www.truckline.com/store

Important References

TMC RP 214B	Tire/Wheel End Balance and Runout
TMC RP 216	Radial Tire Conditions Analysis Guide
TMC RP 219A	Radial Tire Wear Conditions and Causes
TMC RP 222A	User's Guide To Wheels and Rims
TMC RP 230	Tire Test Procedures for Tread wear, Serviceability, and Fuel Economy
TMC RP 514	Pre-Alignment Inspection
TMC RP 618	Wheel Bearing Adjustment Procedure
TMC RP 620B	Front End Alignment Steering Geometry
TMC RP 708A	Trailer Axle Alignment
TMC RP 642	Guidelines For Total Vehicle Alignment
TMC RP 644	Wheel End Conditions Analysis Guide
TMC RP 645	Tie Rod End Inspection and Maintenance Procedure

Video's

TMC T0326	Wheel End Maintenance
TMC T0372	Tire Pre-Trip Inspection Guidelines

Other

TMC T0400	Wheel bearing Adjustment Procedure Wall Chart

www.hendrickson-intl.com

HENDRICKSON

Truck Commercial Vehicle Systems
800 South Frontage Road
Woodridge, IL 60517-4904 USA

1.866.755.5968 (Toll-free U.S. and Canada)
630.910.2800 (Outside U.S. and Canada)
Fax 630.910.2899

17730-248 Rev E 08-11

Information contained in this literature was accurate at the time of publication. Product changes may have been made after the copyright date that are not reflected.
© 2011 Hendrickson USA, L.L.C. (U.S. Rights) Hendrickson International Corporation (Rights Outside U.S.) All Rights Reserved

Printed in United States of America