PARTS LIST

SURELOK®

LIT NO: L1055
DATE: April 2012

TABLE OF CONTENTS

INTRAAX® AAT 23K/25K SERIES 2
INTRAAX AAT 23K/25K AND AANT 23K SERIES 3
VANTRAAX® HKANT 40K/46K AND HKA180 4
VANTRAAX HKANT 40K/ HKANT 46K 5
VANTRAAX HKAT 46K – WIDE BUSHING/STRAIGHT BEAM MODEL 6
HK190/230 SLIDER SUSPENSIONS 9
HT190/230 TOP-MOUNT SUSPENSIONS 11
HT250U UNDERSLUNG SUSPENSION 12
HS190/230 SLIDER SERIES 13
SURELOK® AIR CONTROL KITS 14

HENDRICKSON
The World Rides On Us®

INTRAAX® AAT 23K/25K

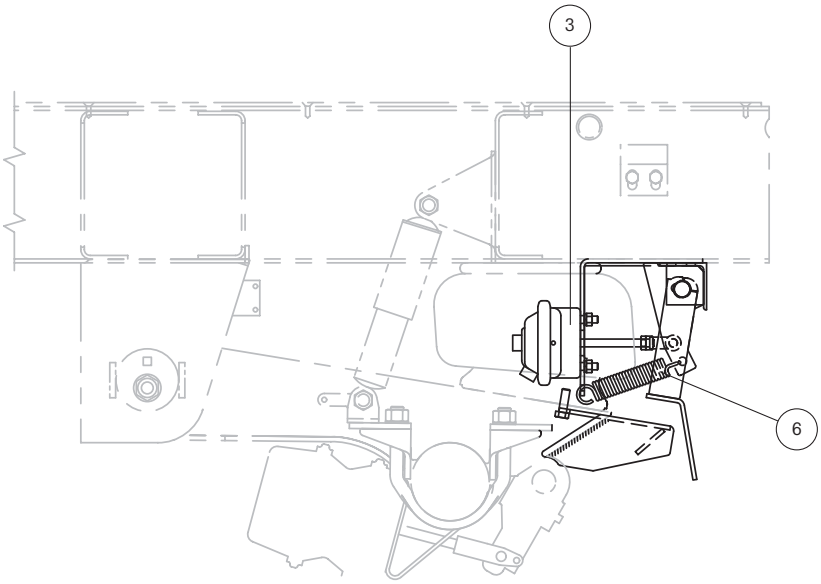

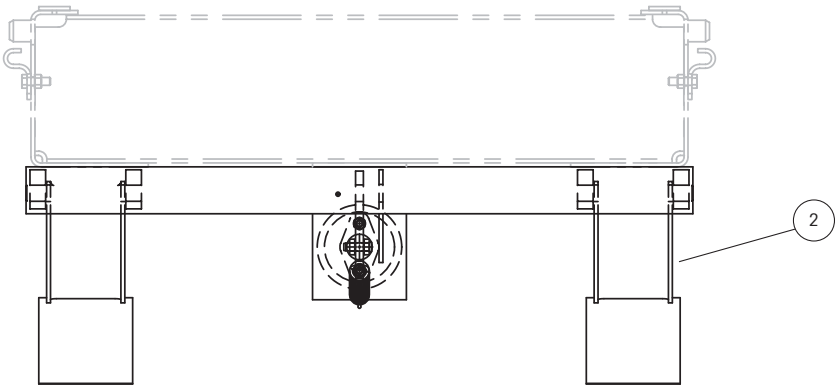

Note: Picture does not depict all models available. Please contact Hendrickson for retrofit kits. SURELOK models with identification tag will read SLK_.XXX.

INTRAAX® AAT 23K/25K and AANT 23K

ITEM	DESCRIPTION	PART NO.	SYSTEM QTY.	NOTE
1	**SURELOK® RETROFIT KIT**[1] (Not shown)	SLK_-XXX	1	Please contact Hendrickson for assistance

SURELOK SERIES	SUSPENSION MODEL
SLKF	AAT Models
SLKV	AAT Models with High Control
SLKT	AANT Models

2

RIDE HEIGHT LOCK ASSEMBLY / BRAKE CHAMBER VERSION		
Axle Track	**71.5"**	**77.5"**
13.5" ride height	S-22487-1	S-22487-5
14.0" ride height	S-22487-2	S-22487-6
14.5" ride height	S-22487-3	S-22487-7
15.0" ride height	S-22487-4	S-22487-8
16.0" ride height	S-22487-9	S-22487-13
16.5" ride height	S-22487-17	S-22487-18
17.0" ride height	S-22487-11	S-22487-14
18.0" ride height	S-22487-11	S-22487-15
19.0" ride height	S-22487-12	S-22487-16

3	**BRAKE CHAMBER**	A-21452		Type 9 Chamber
4	**BEAM EXTENSION** (Not shown)			
	4a Bolt-on AAT			
	Roadside	B-30841-1	1	SLKF, SLKV models
	Curbside	B-30841-2	1	SLKF, SLKV models
	4b Weld-on AANT			
	Roadside	D-27653-1	1	SLKT models
	Curbside	D-27653-2	1	SLKT models
5	**BEAM EXTENSION HARDWARE** (Not shown)			
	5a Beam extension bolt kit (Not shown)	S-25980		Includes SA-6900-16 & SA-7000-6
	5b 1/2-13" flanged screw	SA-6900-6	8	
	5c 1/2-13" prevailing torque flanged nut	SA-7000-1	8	
6	**SPRING 1.25" × 6.125" X 0.177"**	S-21539	1	

[1] Many SURELOK Retrofit kit options exist based on suspension model, ride height, slider width and valve selection. Contact Hendrickson for assistance.

VANTRAAX® HKANT 40K / 46K AND HKA180

Illustration 1
Units shipped before **May 1999**

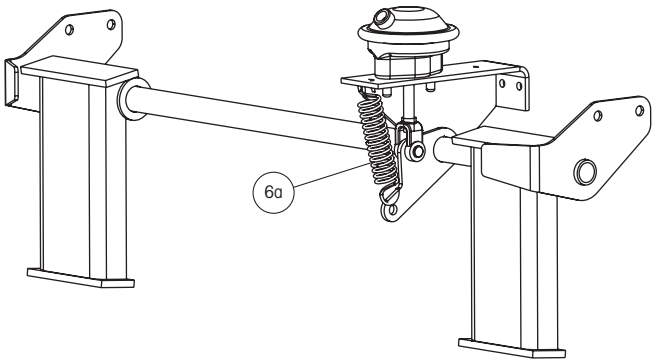

Illustration 2
Units shipped between
May 1999 and December 2001

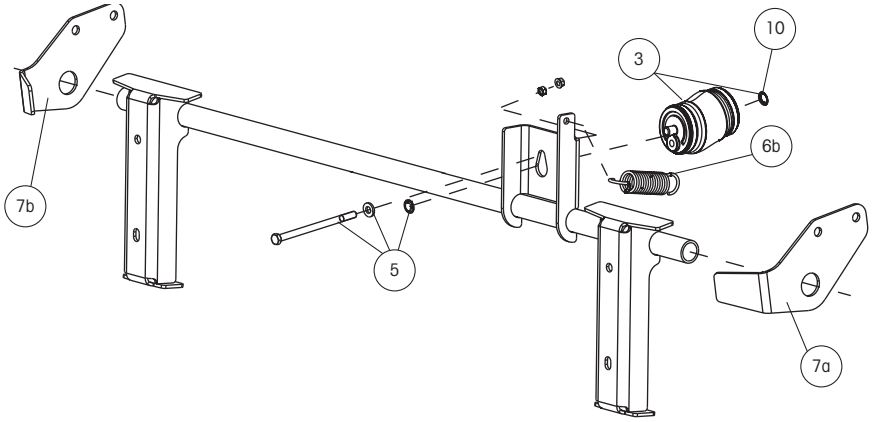

Illustration 3
Units shipped after **December 2001**

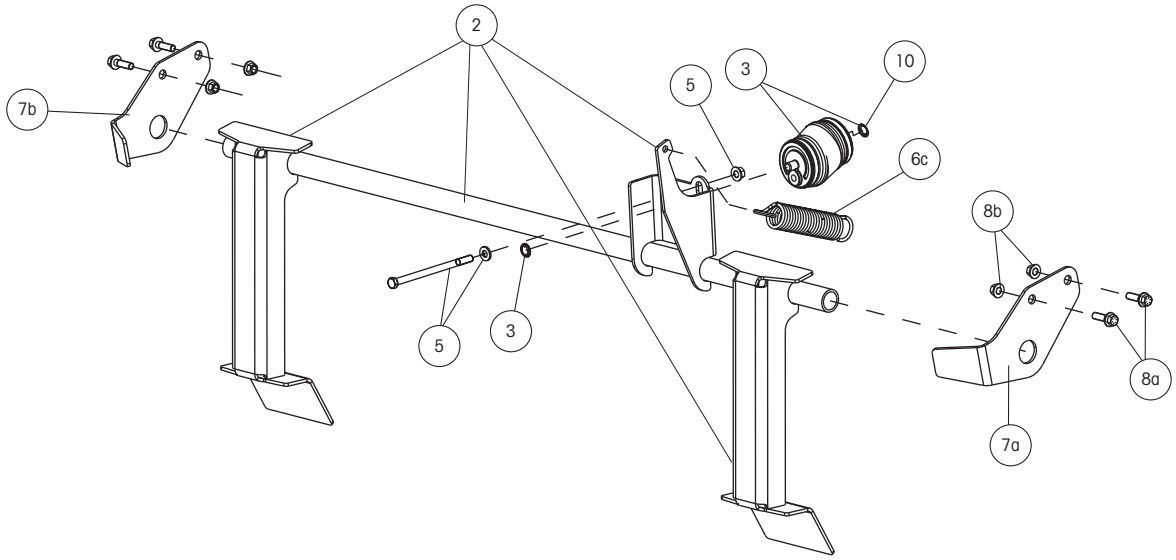

VANTRAAX® HKANT 40K / HKANT 46K

ITEM	DESCRIPTION	PART NO.	SYSTEM QTY.	NOTE
1	**SURELOK® RETROFIT KIT**[1] (Not shown)	SLK_.XXX		Please contact Hendrickson for assistance

SURELOK SERIES	SUSPENSION MODEL
SLKS	Narrow pivot VANTRAAX with short beams
SLKP	Narrow pivot VANTRAAX with long beams

	1a 15" RH, 48" box, no valve	SLKS.14	1	
	1b 16" RH, 48" box, manual valve with bypass	SLKS.16	1	
	1c 16" RH, 48" box, manual valve with bypass and dump valve	SLKS.19	1	
	1d 16" RH, 48" box, no valve	SLKS.18	1	
	1e 17" RH, 48" box, manual valve with bypass	SLKS.22	1	
	1f 17" RH, 48" box, manual valve with bypass and dump valve	SLKS.23	1	
	1g 17" RH, 48" box, no valve	SLKS.15	1	

2

RIDE HEIGHT LOCK ASSEMBLY[2]	AIR SPRING ACTUATED		
Slider Box Width	**42" Box**	**48" Box**	**54" Box**
16.0" ride height	S-26581-4C	S-26581-8C	S-26581-17C
16.5" ride height	S-26581-13C	S-26581-14C	S-26581-18C
17.0" ride height	S-26581-9C	S-26581-11C	S-26581-19C
18.0" ride height	S-26581-9C	S-26581-11C	S-26581-19C
19.0" ride height	S-26581-10C	S-26581-12C	S-26581-20C

3	**AIR SPRING ACTUATOR ASSEMBLY**	S-25593	1	
4	**BEAM EXTENSION WELDMENTS** (Not shown)			SLKS models
	Roadside	D-27653-1	1	
	Curbside	D-27853-2	1	
5	**RESTRAINT BOLT KIT**	S-25516	1	For use with air spring version
6	**SPRING**			
	6a Units shipped before May 1999	S-21539	1	1.25" × 6.125" × 0.177". Use with brake chamber version, Illustration 1
	6b Units shipped between May 1999 and December 2001	S-24495	1	1.27" × 4.40" × 0.148". Use with air spring version, Illustration 2
	6c Units shipped after December 2001	B-26597	1	1.50" × 6.63" × 0.177". Use with air spring version, Illustration 3
7	**SHAFT BRACKET**			
	7a Roadside	C-24453-1	1	Use only with air spring version; order 2 sets of hardware for each bracket
	7b Curbside	C-24453-2	1	Use only with air spring version; order 2 sets of hardware for each bracket
8	**MOUNTING HARDWARE FOR BRACKET**			
	8a 1/2-13" flanged screw	SA-6900-10	4	2 per bracket
	8b 1/2-13" prev-torq. flanged nut	SA-7001-1	4	2 per bracket
9	**MOUNTING HARDWARE FOR BRAKE CHAMBER** (Not shown)	SA-7000-3	1	3/8-16" Flanged Screw
10	**SPEED NUT**	A-24482-1	2	Included in S-25593

[1] Many SURELOK retrofit kit options exist based on suspension model, ride height, slider width and valve selection. Contact Hendrickson for assistance.

[2] Contact Hendrickson for units with brake chamber actuated assembly.

VANTRAAX® HKAT 46K - Wide Bushing / Straight Beam Model

Illustration 1
Units shipped before
April 1998

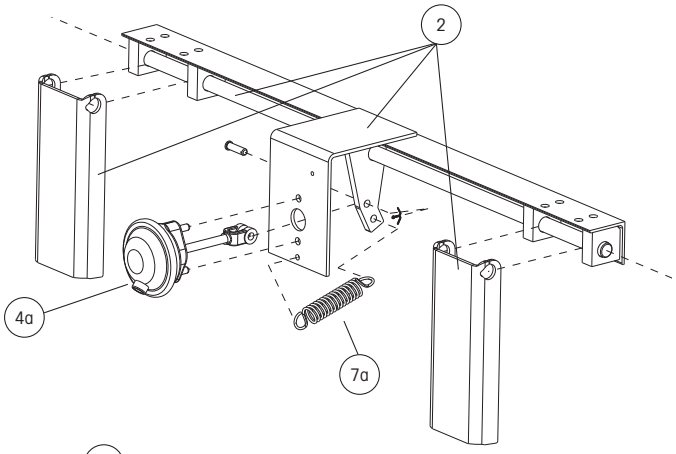

Illustration 2
Units shipped between
April 1998 and May 1999

Obsolete

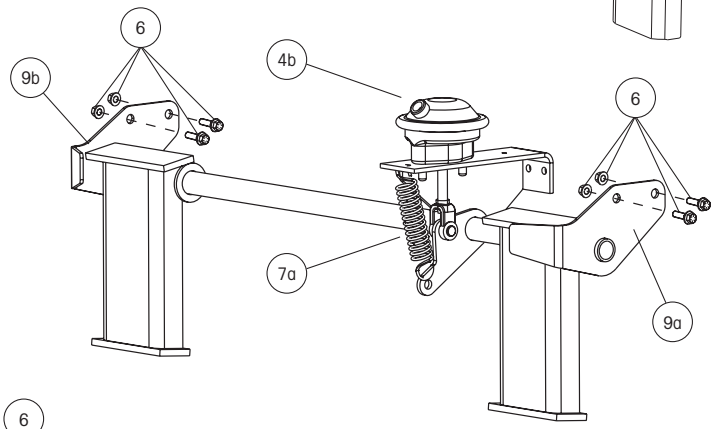

Illustration 3
Units shipped between
May 1999 and December 2001

Obsolete

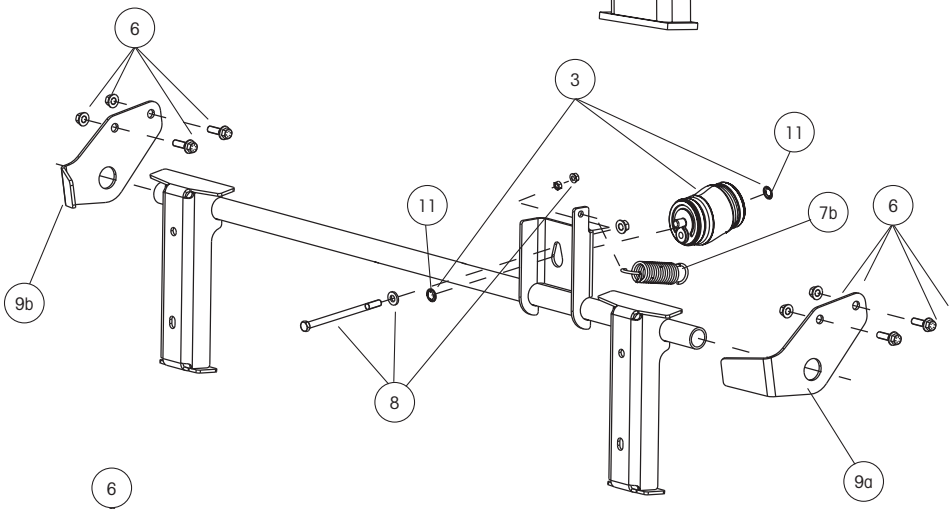

Illustration 4
Units shipped after
December 2001

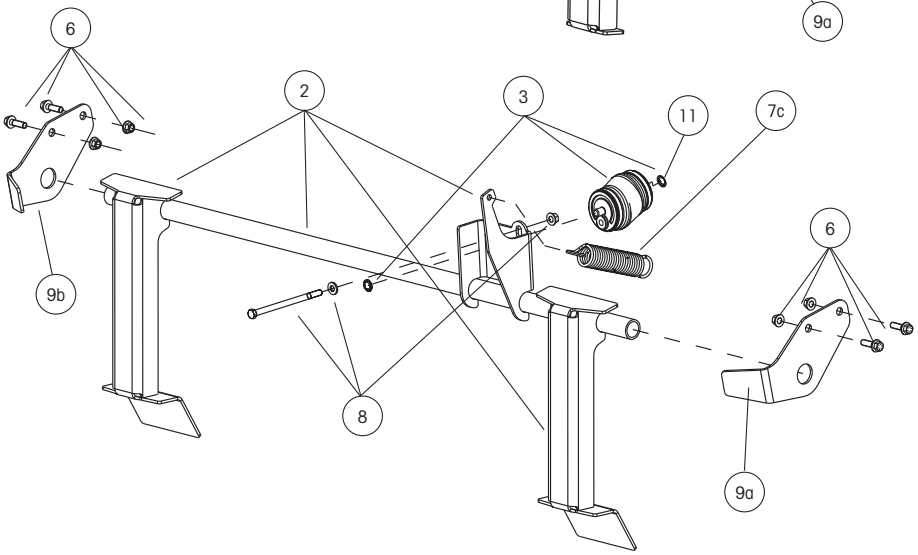

VANTRAAX® HKAT 46K

ITEM	DESCRIPTION	PART NO.	SYSTEM QTY.	NOTE
1	**SURELOK® RETROFIT KIT**[1] (Not shown)	SLK_-XXX	1	Please contact Hendrickson for assistance

SURELOK SERIES	SUSPENSION MODEL	DATE PURCHASED
SLKF	Brake chamber actuated version	Wide HKA 200K models sold before May 1999
SLKO	Air spring actuated version	Current models
		Wide pivot VANTRAAX HKAT
		Wide HKA 200K models sold after July 1999

2

RIDE HEIGHT LOCK ASSEMBLY		
Air Spring Actuated (SLKO Models)		
Slider Box Width	**42" Box**	**48" Box**
13.5" ride height	N/A	N/A
14.0" ride height	S-26581-2C	S-26581-6C
14.5" ride height	N/A	N/A
15.0" ride height	S-26581-4C	S-26581-8C
16.0" ride height	S-26581-4C	S-26581-8C
16.5" ride height	S-26581-13C	S-26581-14C
17.0" ride height	S-26581-9C	S-26581-11C
18.0" ride height	S-26581-9C	S-26581-11C
19.0" ride height	S-26581-10C	S-26581-12C
Brake Chamber Actuated (SLKF Models)		
Slider Box Width	**42" Box**	**48" Box**
13.5" ride height	S-22487-1	S-22487-5
14.0" ride height	S-22487-2	S-22487-6
14.5" ride height	S-22487-3	S-22487-7
15.0" ride height	S-22487-4	S-22487-8
16.0" ride height	S-22487-9	S-22487-13
16.5" ride height	S-22487-17	S-22487-18
17.0" ride height	S-22487-10	S-22487-14
18.0" ride height	S-22487-11	S-22487-15
19.0" ride height	S-22487-12	S-22487-16

3	**AIR SPRING ACTUATOR ASSEMBLY**	S-25593	1	For use with air spring version
4	**BRAKE CHAMBERS**			
	4a	A-21452	1	For use with brake chamber version
	4b	S-23169		Type 12 / (SLKF) Type 9 chamber
5	**BEAM EXTENSIONS** (Not shown)			
	5a Roadside	B-30841-1	1	SLKO, SLKF models
	5b Curbside	B-30841-2	1	SLKO, SLKF models
6	**BEAM EXTENSION BOLT KIT** (Not shown)	S-25980		Includes SA-6900-16 and SA-7000-6
7	**TENSION SPRINGS**			
	7a 1.25"× 6.13" × 0.177" spring	S-21539	1	For use with brake chamber version
	7b 1.27"× 4.40" × 0.148" spring	S-24495	1	For use with air spring version
	7c 1.5" × 6.63" × 0.177" spring	B-26597	1	For use with air spring version
8	**RESTRAINT BOLT KIT**	S-25516	1	For use with air spring version
9	**SHAFT BRACKET**			
	9a Roadside	C-24453-1	1	SLKO models
	9b Curbside	C-24453-2	1	SLKO models
10	**MOUNTING HARDWARE FOR SHAFT BRACKETS** (Not shown)			
	10a 1/2-13" flanged screw	SA-6900-10	4	4 per system, 2 per bracket
	10b 1/2-13" flanged screw	SA-6900-6	8	
	10c 1/2-13" prevailing torque flanged nut	SA-7000-1	4	4 per system, 2 per bracket
	10d 7/16" hex head bolt	SA-1100-30	1	
	10e Washer	SA-1500-35	1	
11	**SPEED NUT**	A-24482-1	2	Included in S-25593

[1] Many SURELOK retrofit kit options exist based on suspension model, ride height, slider width and valve selection. Contact Hendrickson for assistance.

VANTRAAX® HKAT 46K
CONTINUED

ITEM	DESCRIPTION	PART NO.	SYSTEM QTY.	NOTE
12	**BRAKE CHAMBER MOUNTING HARDWARE** (Not shown)			
	12a 3/8-16" flanged screw	SA-6900-5	1	
	12b 3/8-16" prev-torq. flanged nut	SA-7000-3	1	

[1] Many SURELOK retrofit kit options exist based on suspension model, ride height, slider width and valve selection. Contact Hendrickson for assistance.

HK190/230 Slider Suspensions

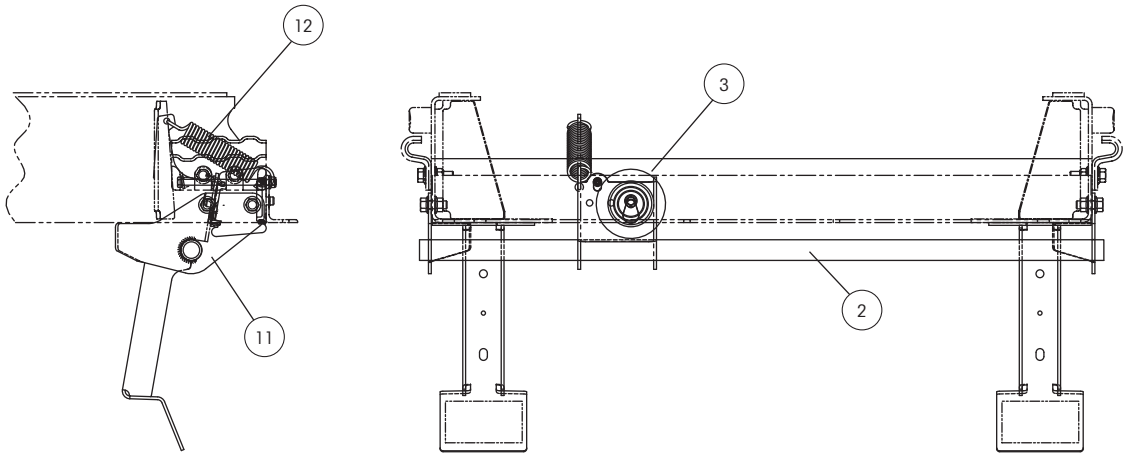

HK190 / 230 Slider Suspensions
CONTINUED

ITEM	DESCRIPTION	PART NO.	SYSTEM QTY.	NOTE
1	**SURELOK RETROFIT KIT**[1] (Not shown)	SLK_-XXX	1	Please contact Hendrickson for assistance

SURELOK SERIES	SUSPENSION MODEL	DATE PURCHASED
SLKC	Long Beams	Sliders made after December 1997
SLKN		Sliders made before December 1997
SLKM	Short Beams	Sliders made after December 1997
SLKR		Sliders made before December 1997

2

RIDE HEIGHT LOCK ASSEMBLY		
AIR SPRING ACTUATED VERSION (SLKR and SLKN models)		
Slider Box Width	**42" Box**	**48" Box**
16.0" ride height	S-26542-1C	S-26542-6C
16.5" ride height	S-26542-2C	S-26542-7C
17.0" ride height	S-26542-3C	S-26542-8C
18.0" ride height	S-26542-4C	S-26542-9C
19.0" ride height	S-26542-5C	S-26542-10C
BRAKE CHAMBER VERSION (SLKC and SLKM models)		
16.0" ride height	S-21766-1	S-21766-5
16.5" ride height	S-21766-1	S-21766-5
17.0" ride height	S-21766-2	S-21766-6
18.0" ride height	S-21766-3	S-21766-7
19.0" ride height	S-21766-4	S-21766-8

3	**AIR SPRING ACTUATOR**	S-25593	1	SLKN and SLKR models
4	**BRAKE CHAMBER** (Not shown)	A-21452	1	SLKC and SLKM models; Type 9 chamber
5	**BEAM EXTENSION WELDMENT** (Not shown)			
	5a	C-21442	2	SLKR models
	5b	C-26363	2	SLKM models
6	**SPEED NUT** (Not shown)	A-24482-1	2	SLKN and SLKR models
7	**3/8"-16 PREV TORQ HEX FLG NUT** (Not shown)	SA-7000-3	1	
8	**3/8"-FLAT WASHER** (Not shown)	SA-1500-35	1	
9	**HEX HEAD BOLT 7/16" AND UNDER** (Not shown)	SA-1100-30	1	
10	**SHAFT BRACKET** (Not shown)			
	10a Roadside	C-24453-1	1	
	10b Curbside	C-24453-2	1	
11	**SPRING**			
	11a 1.25" × 6.125" × .177" (Not shown)	S-21539	1	Use with brake chamber version
	11b 1.50" × 6.63" × .177"	B-26597	1	Use with air spring version
12	**MOUNTING HARDWARE FOR BRAKE CHAMBER** (Not shown)			
	12a ½-13" flanged screw	SA-6900-6	4	Use with brake chamber version
	12b ½-13" flanged screw	SA-6900-8	4	
	12c ½-13" prev-torq HEX FLG Nut	SA-7000-1	4	
13	**MOUNTING HARDWARE FOR SHAFT BRACKET** (Not shown)			Four per system, two per bracket
	13a ½-13" flanged screw	SA-6900-10	4	
	13b ½-13" prev-torq HEX FLG Nut	SA-7000-1	4	

[1] Many SURELOK retrofit kit options exist based on suspension model, ride height, slider width and valve selection. Contact Hendrickson for assistance.

HT190 / 230 Top-mount Suspensions

ITEM	DESCRIPTION	PART NO.	SYSTEM QTY.	NOTE
1	**SURELOK RETROFIT KIT**[1] (Not shown)	SLK_-XXX	1	Please contact Hendrickson for assistance

SURELOK SERIES	SUSPENSION MODEL	
SLKL	Long Beams	High Control
SLKQ	Short Beams	
SLKA		Standard
SLKK	Long Beams	

2

RIDE HEIGHT ASSEMBLY		
BRAKE CHAMBER VERSION (SLKL & SLKQ MODELS)		
Slider Box Width	**42" Box**	**48" Box**
14" ride height	S-23630-1	S-23630-2
15" ride height	S-23630-3	S-23630-4
16" ride height	S-23630-5	S-23630-6
17" ride height	S-23630-7	S-23630-8
BRAKE CHAMBER VERSION (SLKA & SLKK MODELS)		
14" ride height	S-21443-1	S-21443-5
15" ride height	S-21443-2	S-21443-6
16" ride height	S-21766-1	S-21766-5
17" ride height	S-21443-4	S-21443-8

3	**BRAKE CHAMBER**	A-21452	1	Type 9 chamber
4	**BEAM EXTENSION WELDMENT** (Not shown)	C-26363	2	SLKA and SLKQ models
5	**BEAM EXTENSION SCREW** (Not shown)	SA-6900-8	2	
6	**SPRING 1.25" × 6.125" × 0.177"**	S-21539	1	

[1] Many SURELOK Retrofit kit options exist based on suspension model, ride height, slider width and valve selection. Contact Hendrickson for assistance.

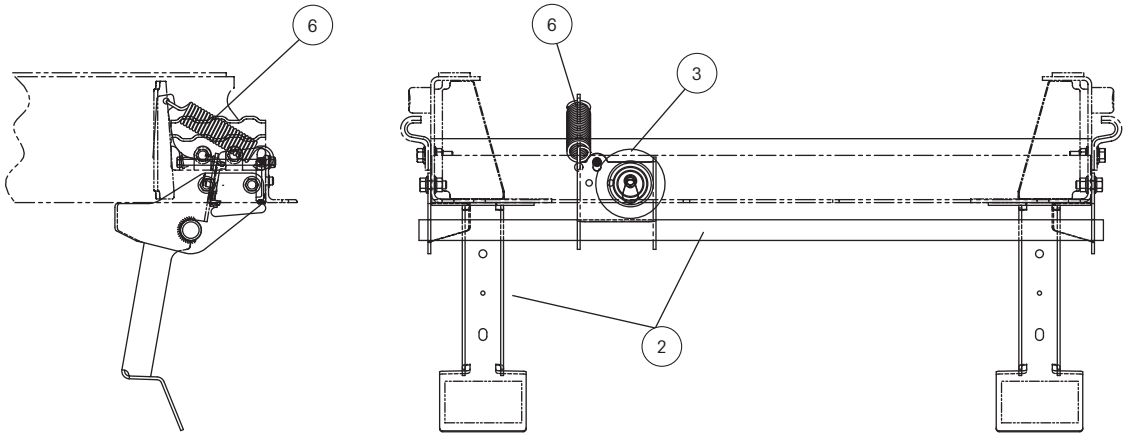

HT250U Underslung Suspension

ITEM	DESCRIPTION	PART NO.	SYSTEM QTY.	NOTE
1	**SURELOK® RETROFIT KIT**[1] (Not shown)	SLKU_-XXX	1	Please contact Hendrickson for assistance

SURELOK SERIES	SUSPENSION MODEL
SLKU	Underslung HT 250U

2

RIDE HEIGHT ASSEMBLY (Not shown)		
BRAKE CHAMBER VERSION		
Slider Box Width	42" Box	48" Box
12" ride height	D-27888-1	D-27888-3
14" ride height	D-27888-2	D-27888-4

3	**BRAKE CHAMBER**	S-23169	1	Type 12 chamber
4	**SPRING 1.25" × 6.125" × 0.177"**	S-21539	1	
5	**GREASE FITTING** (Not shown)	S-22830	4	

[1] Many SURELOK Retrofit kit options exist based on suspension model, ride height, slider width and valve selection. Contact Hendrickson for assistance

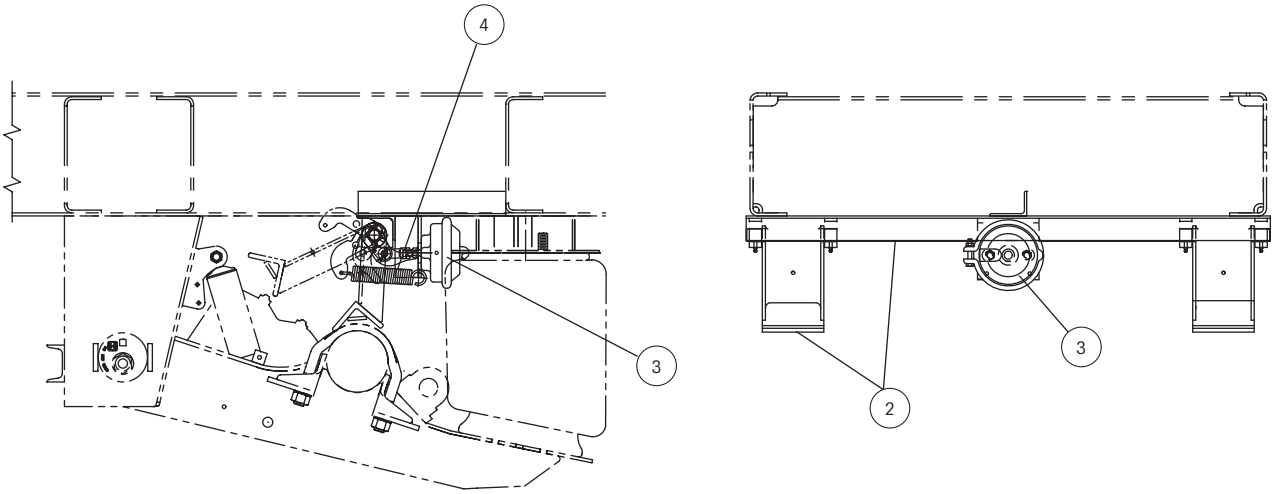

HS190 / 230 Slider Series

ITEM	DESCRIPTION	PART NO.	SYSTEM QTY.	NOTE
1	**SURELOK® RETROFIT KIT**[1] (Not shown)	SLK_-XXX	1	Please contact Hendrickson for assistance

SURELOK SERIES	SUSPENSION MODEL	
SLKB	Long Beams	HS models
SLKA	Short Beams	

2

RIDE HEIGHT LOCK ASSEMBLY		
BRAKE CHAMBER VERSION (SLKB & SLKA models)		
Slider Box Width	**42" Box**	**48" Box**
14" ride height	S-23630-1	S-23630-2
15" ride height	S-23630-3	S-23630-4
16" ride height	S-23630-5	S-23630-6
17" ride height	S-23630-7	S-23630-8

3	**BRAKE CHAMBER**	A-21452	1	Type 9 chamber
4	**SPRING 1.25" × 6.125" × 0.177"**	S-21539	1	
5	**MOUNTING HARDWARE** (Not shown)			
	5a ½"-13" flanged screw HTES-1057	SA-6900-8	2	SLKA models
	5b ½"-13" × 1.00 lg. flanged bolt	SA-6900-6	8	SLKB models
	5c ½"-13" prevailing torque flanged nut	SA-7000-1	8	SLKB models
6	**BEAM EXTENSION**	C-26363	2	SLKA models

[1] Many SURELOK Retrofit kit options exist based on suspension model, ride height, slider width and valve selection. Contact Hendrickson for assistance.

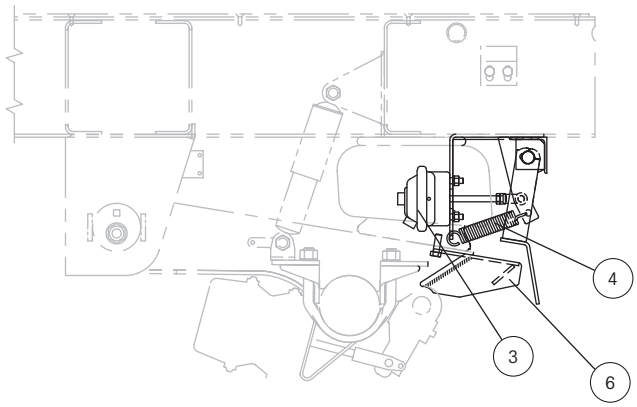

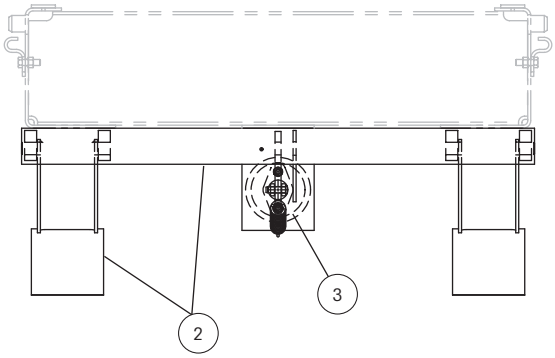

SURELOK AIR CONTROL KITS

ITEM	DESCRIPTION	PART NO.	SYSTEM QTY.	
	Manual Bypass *– allows you to completely bypass SURELOK®, meaning the legs are disengaged and not functioning.*			
1	**3-WAY BALL VALVE** (Not shown)	VS-22535	1	
	Manual Bypass with Dump *– allows you to completely bypass SURELOK and fully exhaust the trailer's air suspension.*			
2	**3-WAY BALL VALVE**	VS-22535	1	
3	**3-WAY AIR PILOTED VALVE** (Not shown)	VS-23588	1	
4	**2-WAY CHECK VALVE** (Not shown)	VS-24988	1	
	Specialized Auto Dump *– AKSL0001 – Allows SURELOK to engage, then exhausts the trailer's air suspension to rest the SURELOK legs on the suspension beams.*			
5	**3-WAY PILOT VALVE** (Not shown)	VS-24053	1	
6	**CHOKE** (Not shown)	A-27314-1	1	1/8" NPT
	Manual Bypass with Specialized Auto Dump *– Allows you to completely bypass SURELOK, OR allows SURELOK to engage, then exhausts the trailer's air suspension to rest the SURELOK legs on the suspension beams.*			
7	**3-WAY BALL VALVE** (Not shown)	VS-22535	1	
8	**3-WAY PILOT VALVE** (Not shown)	S-24053	1	

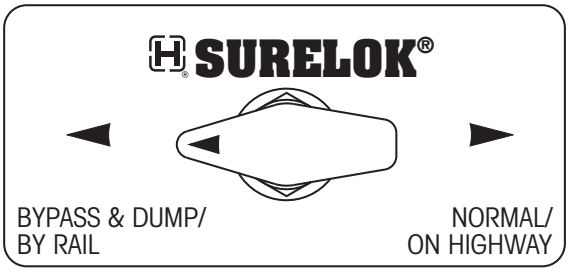

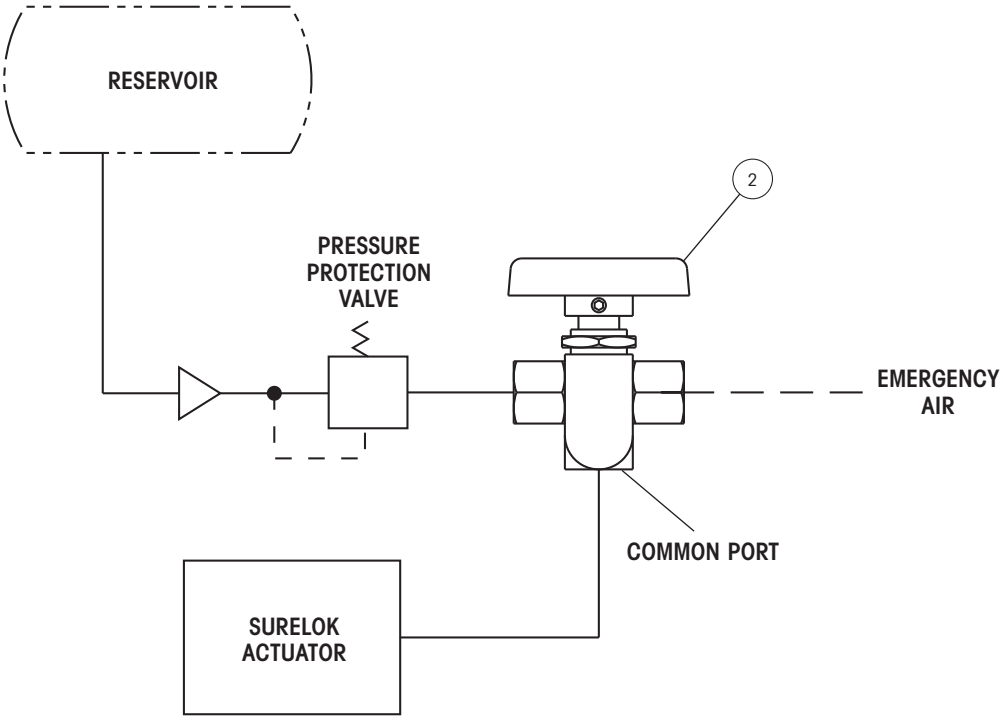

NOTES

This Page
Intentionally
Left Blank

www.hendrickson-intl.com

HENDRICKSON®

Hendrickson Canada
250 Chrysler Drive, Unit #3
Brampton, ON Canada L6S 6B6
905.789.1030
Fax 905.789.1033

Trailer Commercial Vehicle Systems
2070 Industrial Place SE
Canton, OH 44707-2641 USA
866.RIDEAIR (743.3247)
330.489.0045
Fax 800.696.4416

Hendrickson Mexicana
Av. Industria Automotriz #200
Parque Industrial Stiva Aeropuerto
Apodaca, N.L., México C.P. 66600
+52 (81) 8288. 1300
Fax +52 (81) 8288. 1301

Information contained in this literature was accurate at the time of publication. Product changes may have been made after the copyright date that are not reflected.
© 2012 Hendrickson USA, L.L.C. All Rights Reserved

L1055 04-12

Printed in United States of America