TECHNICAL PROCEDURE

SOFTEK® for FCCC Motorhome Chassis

SUBJECT: Service Instructions
LIT NO: 17730-253
DATE: March 2011 **REVISION:** E

TABLE OF CONTENTS

Section 1 Introduction 2

Section 2 Product Description 3

Section 3 Important Safety Notice 5

Section 4 Special Tools 9

Section 5 Parts Lists
- Vehicles built after May 2010 9K/10K/12K 10
- Vehicles built prior to May 2010 9K/10K 12

Section 6 Towing Procedures 14

Section 7 Preventive Maintenance
- Component Inspection 17
- Clamp Group Re-torque Interval 18
- Lubrication Intervals 18
- Kingpin Lubrication 19
- Tie Rod End Lubrication 19
- Tie Rod End Inspection 20
- Tire Inspection 22
- Shock Absorber Inspection 24
- Front Thrust Washer Inspection 26
- Rear Thrust Washer Inspection 26
- Steering Knuckle Inspection 27
- Kingpin Bushing Inspection 28
- Axle Wrap Liner Inspection 29

Section 8 Alignment & Adjustments
- Alignment Definitions 30
- Inspection Prior to Alignment 32
- Front Wheel Alignment 33
- Steering Stop 35
- Toe Setting 35
- Spring Eye Re-torque 37

Section 9 Component Replacement
- Fasteners 38
- Shock Absorber 38
- Front Leaf Spring Frame Hanger 39
- Rear Shackle Frame Bracket 40
- Leaf Spring
  - Vehicles built after May 2010 41
  - Vehicles built prior to May 2010 42
- Spring Eye Bushings 44
- Bottom Axle Wrap (If equipped) 44
- Top Axle Wrap-in chassis (If equipped) . . . 45
- Front Axle Assembly
  - Vehicles built after May 2010 47
  - Vehicles built prior to May 2010 50
- STEERTEK Axle Removal
  - Vehicles built after May 2010 47
  - Vehicles built prior to May 2010 51
  - Steering Knuckle Disassembly 54
  - Kingpin Preparation & Measurement . . . 55
  - Kingpin Bushing Removal 57
  - Steering Knuckle Bore Measurement . . . 58
  - Kingpin Bushing Installation 58
  - Kingpin Bushing Reaming 59
  - Kingpin Seal Installation 60
  - Steering Knuckle Assembly 61
- Tie Rod End and Cross Tube 62

Section 10 Alignment Specifications 65

Section 11 Torque Specifications 66

Section 12 Troubleshooting Guide 70

Section 13 Reference Material . . . . . Back Page

HENDRICKSON
The World Rides On Us®

SECTION 1
Introduction

This publication is intended to acquaint and assist maintenance personnel in the preventive maintenance, service, repair, and rebuild of the following Hendrickson equipment as installed on applicable FCCC Motorhome Chassis:

- **SOFTEK®** — Integrated steel spring suspension utilizing the STEERTEK axle.

  See SOFTEK parts lists to determine the components that are manufactured by Hendrickson. For components not manufactured or supplied by Hendrickson contact the vehicle manufacturer for proper preventive maintenance and rebuild instructions.
- **STEERTEK** — A lightweight, formed and robotically welded steer axle assembly.

NOTE Use only Hendrickson Genuine parts for servicing this suspension system.

It is important to read and understand the entire Technical Procedure publication prior to performing any maintenance, service, repair, or rebuild of the product. The information in this publication contains parts lists, safety information, product specifications, features, proper maintenance, service, repair and rebuild instructions for the SOFTEK Suspension and the STEERTEK axle.

Hendrickson reserves the right to make changes and improvements to its products and publications at any time. Contact Hendrickson Tech Services toll-free at 866-755-5968 or e-mail techservices@hendrickson-intl.com for information on the latest version of this manual.

The latest revision of this publication is also available online at www.hendrickson-intl.com.

SECTION 2
Product Description

Leaf spring assembly — With its innovative design, the leaf spring provides superior stability, performance and a soft ride. Durable composite front and patented rear bushings are greaseless and only require periodic inspections.

Shock absorbers — SOFTEK utilizes premium shocks that have been tested and tuned specifically for the FCCC SOFTEK system.

Front and rear frame brackets — Optimized designs deliver weight reduction and durability.

Axle beam — The box-shaped design resists torsional and longitudinal loads more effectively than traditional I-beam axles. Together with the front limbs of the leaf springs, the robotically welded axle beam forms a torsion system, enhancing roll stability characteristics and improving handling.

Axle clamp group — The axle-friendly clamp group provides four-sided clamping pressure. The clamp group consists of the following:

- Top pad
- ¾" U-bolts, washers and nylon Locknuts

Adjustable tie rod — To help maximize tire life, the tie rod easily adjusts toe-in/out.

Steering knuckles — The steering and tie rod arms are integrated for increased strength and reduced weight. The unique steering knuckle packaging delivers up to 55° wheel cut. The two piece knuckle design makes replacing the kingpin bushings easier by eliminating the need to remove the kingpins.

FIGURE 2-1 SOFTEK Mechanical Suspension with STEERTEK 1.5 Axle

Capacity: 9,000 lbs., 10,000 lbs., 12,000 lbs.
Spring: 2-Leaf Steel Spring

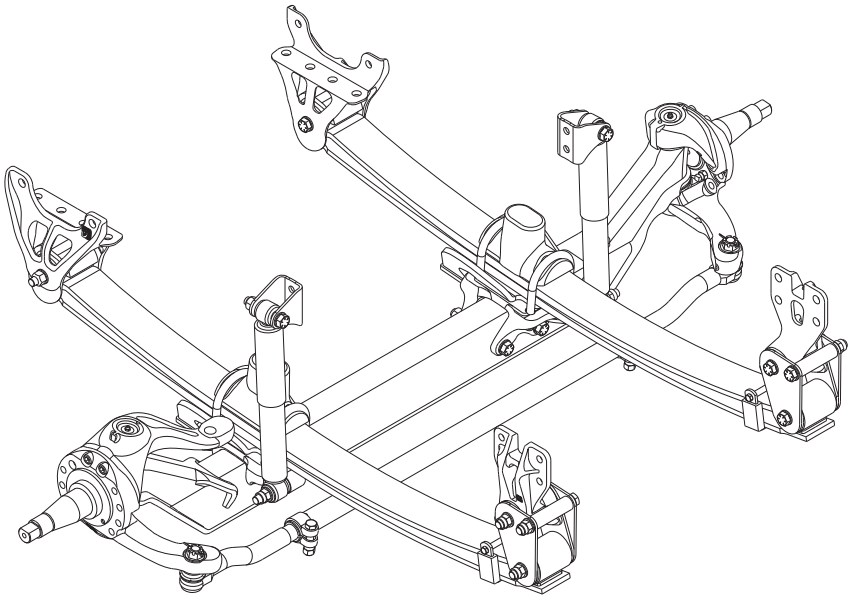

TECHNICAL NOTES

1. SOFTEK is approved for 100% on-highway uses. All applications must comply with applicable Hendrickson specifications and must also be approved by the respective vehicle manufacturer with the vehicle in its original, as-built configuration. Contact Hendrickson and the respective vehicle manufacturer for approval of additional applications. This system has a 9,000, 10,000 and 12,000 pound capacity. System capacity represents maximum loads on tires at ground level.
2. STEERTEK axle is available with 69.0" kingpin Intersection (KPI).
3. STEERTEK axle offers 5.36" axle beam drop heights. Axle beam drop is measured from the kingpin intersection to the top of the axle spring seat (Top wrap).
4. SOFTEK suspension weight includes frame hangers, main springs, bushings, shocks, upper shock brackets and axle attachment hardware.
5. STEERTEK axle system weight is based on a 4.25" drop height and a 69.0" KPI axle. Weight includes, the axle beam, knuckle/steering arm assemblies and tie rod assemblies.
6. SOFTEK is integral to and available exclusively with the STEERTEK axle. This system is anti-lock braking system (ABS) ready. STEERTEK is compatible with most industry standard wheel ends and brakes, contact the vehicle or chassis and body manufacturer for more information.
7. STEERTEK axle product identification is etched on the center front of the axle beam, providing the following information:
   - Axle part number: Identifies the features of the axle beam.
   - Axle assembly number: Identifies the complete assembly, which includes the steering knuckles and bracket assemblies.

FIGURE 2-2

Front view of STEERTEK axle showing location of product identification.

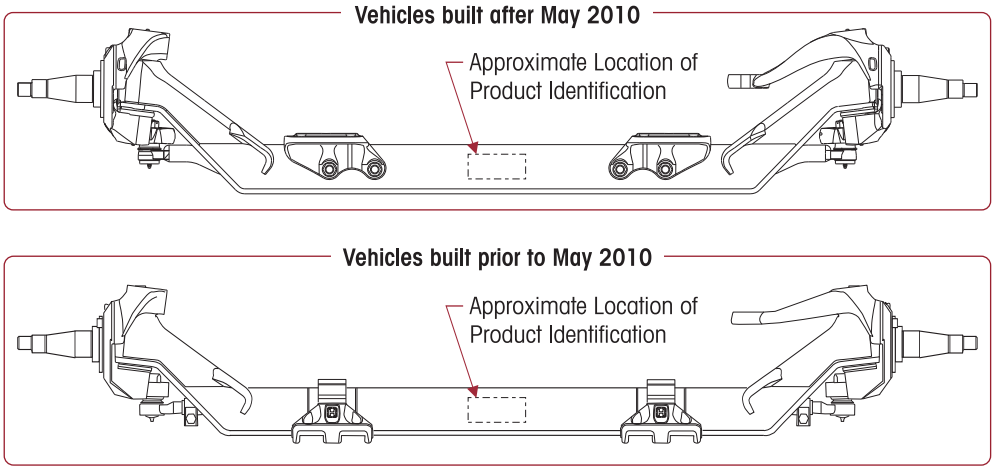

SECTION 3
Important Safety Notice

Proper maintenance, service, and repair is important for the reliable operation of the suspension. The procedures recommended by Hendrickson and described in this technical publication are methods of performing such maintenance, service and repair.

All safety related information should be read carefully to help prevent personal injury and to assure that proper methods are used. Improper servicing may damage the vehicle, cause personal injury, render it unsafe in operation, or void manufacturer's warranty.

Failure to follow the safety precautions in this manual can result in personal injury and/or property damage. Carefully read and understand all safety related information within this publication, on all decals and in all such materials provided by the vehicle manufacturer before conducting any maintenance, service or repair.

EXPLANATION OF SIGNAL WORDS

Hazard "Signal Words" (Danger-Warning-Caution) appear in various locations throughout this publication. Information accented by one of these signal words must be observed to help minimize the risk of personal injury to service personnel, or possibility of improper service methods which may damage the vehicle or render it unsafe.

This is the safety alert symbol. It is used to alert you to potential personal injury hazards. Obey all safety messages that follow this symbol to avoid possible injury or death.

Additional 'Notes' or 'Service Hints' are utilized to emphasize areas of procedural importance and provide suggestions for ease of repair. The following definitions indicate the use of these signal words as they appear throughout the publication.

DANGER — INDICATES AN IMMINENTLY HAZARDOUS SITUATION, WHICH, IF NOT AVOIDED, WILL RESULT IN SERIOUS INJURY OR DEATH.

WARNING — INDICATES A POTENTIAL HAZARDOUS SITUATION, WHICH, IF NOT AVOIDED, COULD RESULT IN DEATH OR SERIOUS INJURY.

CAUTION — INDICATES A POTENTIAL HAZARDOUS SITUATION, WHICH, IF NOT AVOIDED, MAY RESULT IN MINOR OR MODERATE INJURY.

NOTE — An operating procedure, practice condition, etc. which is essential to emphasize.

SERVICE HINT — A helpful suggestion that will make the servicing being performed a little easier and/or faster.

Also note that particular service operations may require the use of special tools designed for specific purposes. These special tools can be found in the Special Tools Section of this publication.

The torque symbol alerts you to tighten fasteners to a specified torque value. Refer to Torque Specifications Section of this publication.

SAFETY PRECAUTIONS

WARNING

FASTENERS

LOOSE OR OVER TORQUED FASTENERS CAN CAUSE COMPONENT DAMAGE, LOSS OF VEHICLE CONTROL, PROPERTY DAMAGE, OR SEVERE PERSONAL INJURY. MAINTAIN CORRECT TORQUE VALUES AT ALL TIMES. CHECK TORQUE VALUES ON A REGULAR BASIS AS SPECIFIED.

WARNING

LOAD CAPACITY

ADHERE TO THE PUBLISHED CAPACITY RATINGS FOR THE SUSPENSIONS. ADD-ON AXLE ATTACHMENTS AND OTHER LOAD TRANSFERRING DEVICES CAN INCREASE THE SUSPENSION LOAD ABOVE THE RATED AND APPROVED CAPACITIES WHICH COULD RESULT IN FAILURE AND LOSS OF VEHICLE CONTROL, POSSIBLY CAUSING PERSONAL INJURY OR PROPERTY DAMAGE.

WARNING

MODIFYING COMPONENTS

DO NOT MODIFY OR REWORK PARTS WITHOUT AUTHORIZATION FROM HENDRICKSON. DO NOT USE SUBSTITUTE OR REPLACEMENT COMPONENTS NOT AUTHORIZED BY HENDRICKSON. USE OF MODIFIED, REWORKED, SUBSTITUTE OR REPLACEMENT PARTS NOT AUTHORIZED BY HENDRICKSON MAY NOT MEET HENDRICKSON'S SPECIFICATIONS, AND CAN RESULT IN FAILURE OF THE PART, LOSS OF VEHICLE CONTROL, AND POSSIBLE PERSONAL INJURY OR PROPERTY DAMAGE. USE ONLY HENDRICKSON AUTHORIZED REPLACEMENT PARTS.

WARNING

SHOCK ABSORBERS

THE SHOCK ABSORBERS ARE THE REBOUND TRAVEL STOPS FOR THE LEAF SPRINGS. ANYTIME THE FRONT AXLE ON SOFTEK SUSPENSION IS SUSPENDED IT IS MANDATORY THAT THE SHOCK ABSORBERS REMAIN CONNECTED. FAILURE TO DO SO COULD CAUSE A REVERSE ARCH IN THE STEEL LEAF SPRINGS, POSSIBLY RESULTING IN PREMATURE STEEL LEAF SPRING FAILURE.

WARNING

PERSONNEL PROTECTIVE EQUIPMENT

ALWAYS WEAR PROPER EYE PROTECTION AND OTHER REQUIRED PERSONAL PROTECTIVE EQUIPMENT TO HELP PREVENT PERSONAL INJURY WHEN PERFORMING VEHICLE MAINTENANCE, REPAIR OR SERVICE.

WARNING

OFF ROADWAY TOWING

WHEN A VEHICLE IS DISABLED AND EQUIPPED WITH A STEERTEK AXLE, CARE MUST BE TAKEN TO ENSURE THERE IS NO DAMAGE TO THE SUSPENSION OR AXLE WHEN TOWING THE VEHICLE. THE USE OF TOW STRAPS ARE NECESSARY TO TOW A DISABLED VEHICLE INTO A REPAIR FACILITY PARKING LOT INTO THE SHOP BAY. THE TOW STRAPS SHOULD BE CONNECTED TO THE TOW HOOKS PROVIDED BY THE VEHICLE MANUFACTURER AT THE FRONT OF THE BUMPER. IF THE USE OF TOW HOOKS IS NOT AN OPTION, THEN TOW STRAPS MAY BE WRAPPED AROUND THE FRONT AXLE, (SEE FIGURE 3-1) IN A MANNER THAT IS ACCEPTABLE FOR TOWING THE VEHICLE FROM A REPAIR FACILITY PARKING LOT INTO THE SHOP BAY. DO NOT USE A TOW CHAIN AROUND THE FRONT AXLE OR WITH A SINGLE POINT LOCATION TO TOW THE VEHICLE. DOING SO WILL DAMAGE THE AXLE AND VOID WARRANTY, SEE FIGURE 3-2. FOR DETAILED TOWING INSTRUCTIONS FOR ON-HIGHWAY TOWING, SEE TOWING PROCEDURES SECTION OF THIS PUBLICATION.

FIGURE 3-1 ACCEPTABLE

FIGURE 3-2 NOT ACCEPTABLE

AXLE CAMBER

AXLE CAMBER IS NOT ADJUSTABLE. DO NOT CHANGE THE AXLE CAMBER ANGLE OR BEND THE AXLE BEAM, SEE FIGURE 3-3. BENDING THE AXLE BEAM TO CHANGE THE CAMBER ANGLE CAN DAMAGE THE AXLE AND REDUCE AXLE STRENGTH, WILL VOID HENDRICKSON'S WARRANTY, AND CAN CAUSE LOSS OF VEHICLE CONTROL, POSSIBLY CAUSING PERSONAL INJURY OR PROPERTY DAMAGE.

WARNING

AXLE KINGPINS

STEERTEK IS A UNIQUE AXLE, IN THAT THE KINGPIN IS CRYOGENICALLY INSTALLED IN THE AXLE. THE KINGPIN IS A NON-REPLACEABLE COMPONENT OF THE AXLE ASSEMBLY. DO NOT TRY TO REMOVE THE KINGPIN. IF THE KINGPIN SHOWS SIGNS OF MOVEMENT, DO NOT OPERATE THE VEHICLE AND IMMEDIATELY CONTACT THE HENDRICKSON TECH SERVICES DEPARTMENT.

WARNING

AXLE REPAIR OR RECONDITIONING

THE REPAIR OR RECONDITIONING OF SUSPENSION OR AXLE COMPONENTS IS NOT ALLOWED AS SHOWN ON LABEL IN FIGURE 3-3. ANY SUSPENSION OR AXLE COMPONENTS FOUND TO BE DAMAGED OR OUT OF SPECIFICATIONS MUST BE REPLACED. ALL MAJOR HENDRICKSON COMPONENTS ARE HEAT TREATED AND TEMPERED. SOFTEK COMPONENTS CANNOT BE BENT, WELDED, HEATED, OR REPAIRED WITHOUT REDUCING THE STRENGTH OR LIFE OF THE COMPONENT. FAILURE TO FOLLOW THESE GUIDELINES CAN CAUSE LOSS OF VEHICLE CONTROL, POSSIBLE PERSONAL INJURY, DEATH, OR PROPERTY DAMAGE AND WILL VOID APPLICABLE WARRANTIES.

FIGURE 3-3 REPLACE ANY SAFETY DECALS THAT ARE FADED, TORN, MISSING, ILLEGIBLE, OR OTHERWISE DAMAGED. CONTACT HENDRICKSON TO ORDER REPLACEMENT LABELS.

Vehicles built after May 2010

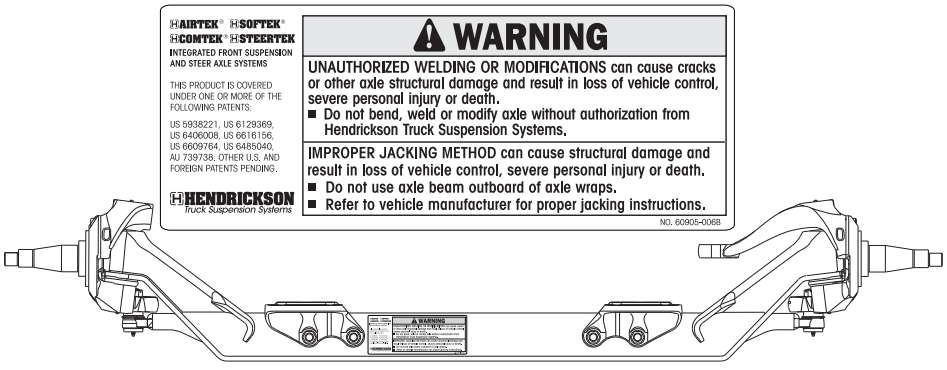

Vehicles built prior to May 2010

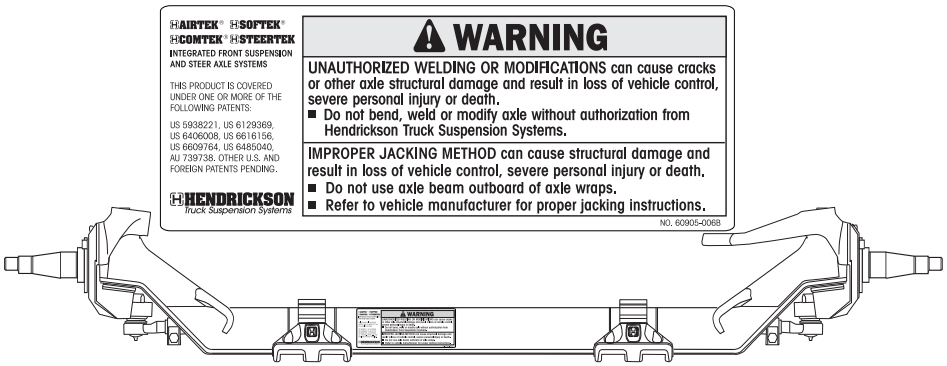

WARNING

DAMAGED AXLE COMPONENTS

IF A VEHICLE EQUIPPED WITH A STEERTEK AXLE IS INVOLVED IN A CRASH, A THOROUGH INSPECTION OF THE AXLE MUST BE PERFORMED NOTING THE CONDITION OF THE AXLE BEAM, KINGPINS, AND KNUCKLE ASSEMBLIES. IF ANY COMPONENT APPEARS DAMAGED, THE AXLE MUST BE REPLACED. IN THE EVENT THE CRASH RESULTED IN EXCESSIVE SIDE LOAD, SUCH AS A BENT WHEEL, HUB, OR SPINDLE, IT IS STRONGLY RECOMMENDED TO REPLACE THE COMPLETE AXLE ASSEMBLY, CONTACT HENDRICKSON TECHNICAL SERVICES WITH ANY QUESTIONS. FAILURE TO REPLACE ANY DAMAGED COMPONENTS CAN CAUSE LOSS OF VEHICLE CONTROL, POSSIBLE PERSONAL INJURY, DEATH, OR PROPERTY DAMAGE AND WILL VOID APPLICABLE WARRANTIES.

WARNING

SUPPORT THE VEHICLE PRIOR TO SERVICING

PLACE THE VEHICLE ON A LEVEL FLOOR AND CHOCK THE WHEELS TO HELP PREVENT THE VEHICLE FROM MOVING. SUPPORT A RAISED VEHICLE WITH SAFETY STANDS. DO NOT WORK UNDER A RAISED VEHICLE SUPPORTED ONLY BY A FLOOR JACK. A JACK CAN SLIP OR FALL OVER. SERIOUS PERSONAL INJURY CAN RESULT.

WARNING

TORCH/WELDING

DO NOT USE A CUTTING TORCH TO REMOVE ANY FASTENERS. THE USE OF HEAT ON SUSPENSION COMPONENTS WILL ADVERSELY AFFECT THE STRENGTH OF THESE PARTS. A COMPONENT DAMAGED IN THIS MANNER CAN RESULT IN THE LOSS OF VEHICLE CONTROL AND POSSIBLE PERSONAL INJURY OR PROPERTY DAMAGE.

EXERCISE EXTREME CARE WHEN HANDLING OR PERFORMING MAINTENANCE IN THE AREA OF THE SPRING ASSEMBLY AND AXLE. DO NOT CONNECT ARC WELDING GROUND LINE TO THE SPRING ASSEMBLY OR AXLE. DO NOT STRIKE AN ARC WITH THE ELECTRODE ON THE SPRING ASSEMBLY OR AXLE. DO NOT USE HEAT NEAR THE SPRING ASSEMBLY OR AXLE. DO NOT NICK OR GOUGE THE SPRING ASSEMBLY OR AXLE. SUCH IMPROPER ACTIONS CAN DAMAGE THE SPRING ASSEMBLY OR THE AXLE, AND CAN CAUSE LOSS OF VEHICLE CONTROL AND POSSIBLE PERSONAL INJURY OR PROPERTY DAMAGE.

CAUTION

PROCEDURES AND TOOLS

A MECHANIC USING A SERVICE PROCEDURE OR TOOL WHICH HAS NOT BEEN RECOMMENDED BY HENDRICKSON MUST FIRST SATISFY HIMSELF THAT NEITHER HIS SAFETY NOR THE VEHICLE'S SAFETY WILL BE JEOPARDIZED BY THE METHOD OR TOOL SELECTED. INDIVIDUALS DEVIATING IN ANY MANNER FROM THE INSTRUCTIONS PROVIDED ASSUME ALL RISKS OF CONSEQUENTIAL PERSONAL INJURY OR DAMAGE TO EQUIPMENT INVOLVED.

WARNING

PARTS CLEANING

SOLVENT CLEANERS CAN BE FLAMMABLE, POISONOUS AND CAUSE BURNS. TO HELP AVOID SERIOUS PERSONAL INJURY, CAREFULLY FOLLOW THE MANUFACTURER'S PRODUCT INSTRUCTIONS AND GUIDELINES AND THE FOLLOWING PROCEDURES:

1. WEAR PROPER EYE PROTECTION.
2. WEAR CLOTHING THAT PROTECTS YOUR SKIN.
3. WORK IN A WELL VENTILATED AREA.
4. DO NOT USE GASOLINE, OR SOLVENTS THAT CONTAIN GASOLINE. GASOLINE CAN EXPLODE.
5. HOT SOLUTION TANKS OR ALKALINE SOLUTIONS MUST BE USED CORRECTLY. FOLLOW THE MANUFACTURER'S RECOMMENDED INSTRUCTIONS AND GUIDELINES CAREFULLY TO HELP PREVENT PERSONAL ACCIDENT OR INJURY.

DO NOT USE HOT SOLUTION TANKS OR WATER AND ALKALINE SOLUTIONS TO CLEAN GROUND OR POLISHED PARTS. DOING SO WILL CAUSE DAMAGE TO THE PARTS AND VOID WARRANTY.

SECTION 4

Special Tools

These shop made tools are designed to install and remove kingpin bushings. Bushing tools are made from cold rolled steel or equivalent. Drawings are for reference only. Hendrickson does not supply these tools.

KINGPIN BUSHING TOOLS

Kingpin Bushing Installer

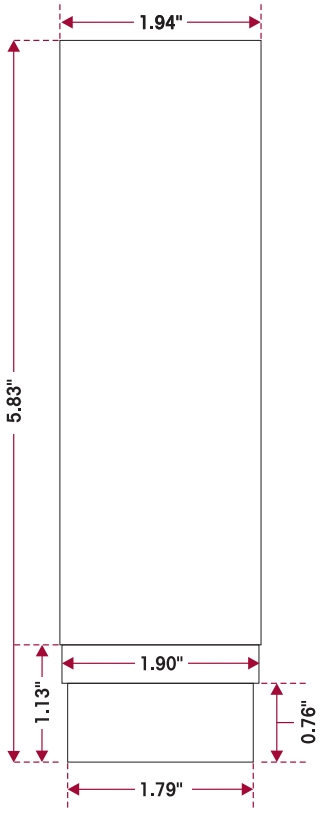

Kingpin Bushing Remover

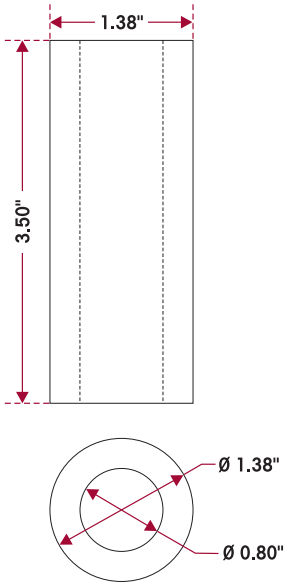

Steering Arm Receiver

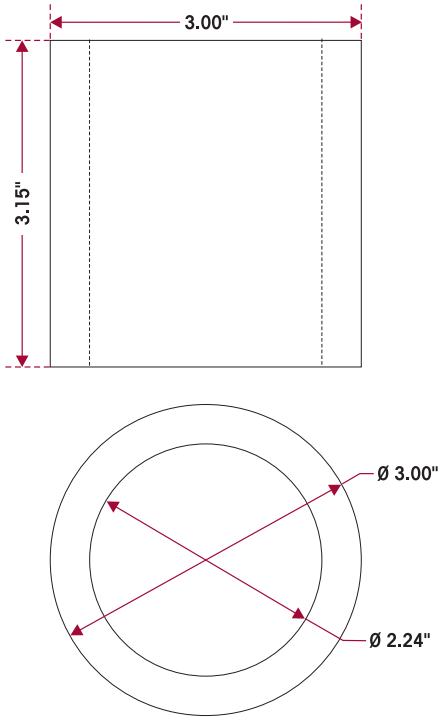

ADJUSTABLE STRAIGHT FLUTE REAMER

The dimension of cutting diameter must facilitate a range of 1.802" – 1.812"

SECTION 5
Parts List

Vehicles built after May 2010 with STEERTEK 1.5 AXLE — 9K/10K/12K Capacity

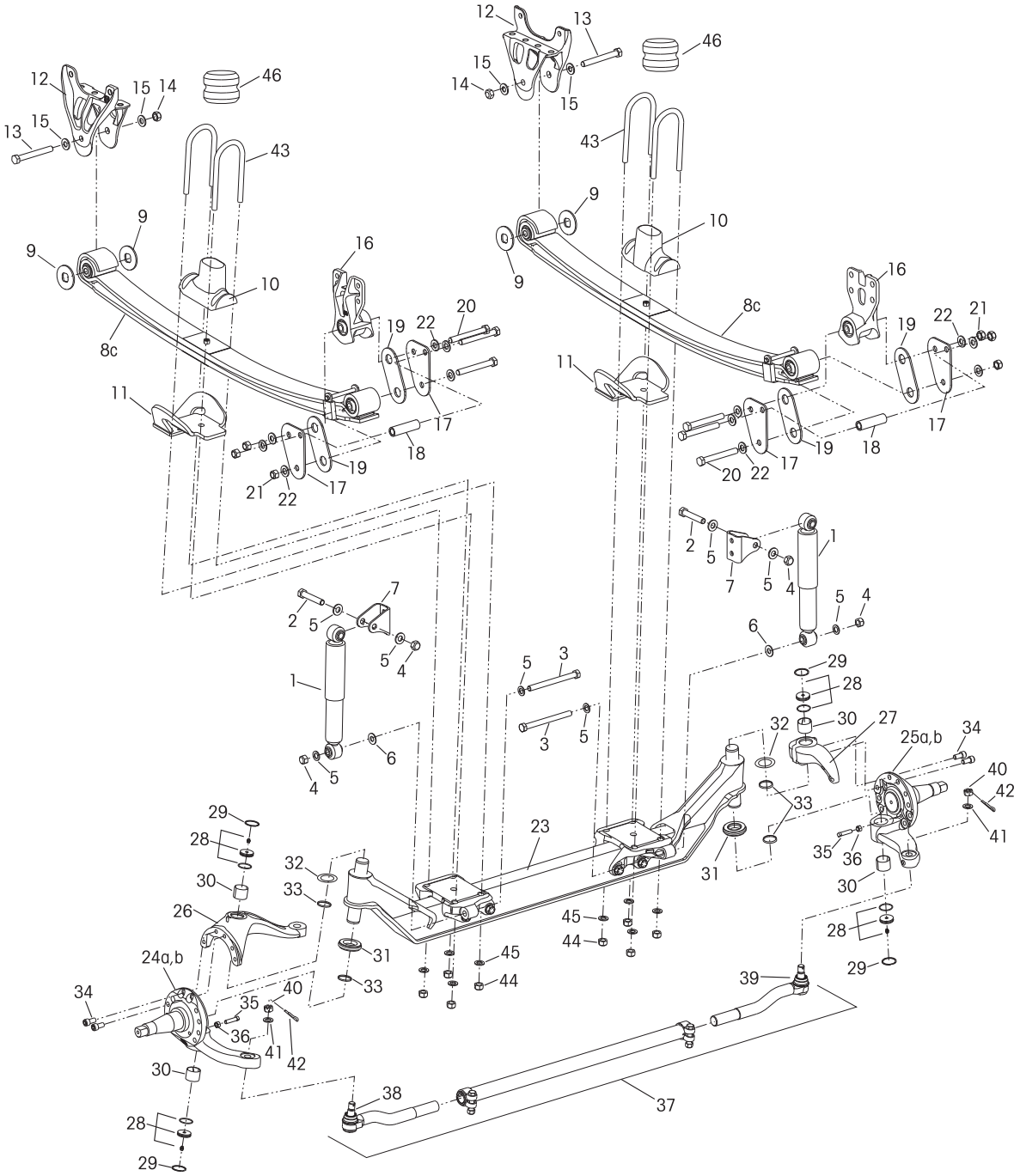

KEY NO.	PART NO.	DESCRIPTION	NO.REQ.
1		*Shock Absorber	2
2		*⅝"-11 UNC Upper Shock Bolt	2
3		*⅝"-11 UNC Lower Shock Bolt	2
4		*⅝"-11 UNC Hex Locknut	4
5		*⅝" Hardened Washer	8
6	59946-005	Shock Spacer	2
7	59423-002	Shock Bracket	2
		Spring Assembly,	2
		Includes Spring Eye Bushings	
8a	66415-002	9K, Single-leaf	
8b	65710-002	10K	
8c	68115-001	12K, 2-Leaf	
9	67493-000	Thrust Washer - Front Hanger	4
10	65714-000	Top Pad	2
11	68759-003	Sway Bar Bracket	2
12	66297-000	Front Hanger	2
13		*¾"-10 UNC Bolt	2
14		*¾"-10 UNC Locknut	2
15		*¾" Hardened Washer	4
16	64316-000	Rear Shackle Bracket and Bushing	2
17	66413-000	Rear Shackle Plate	4
18	60631-000	Shackle Stop Tube	2
19	64159-000	Thrust Washer - Rear Hanger	4
20	58917-021	¾"-10 UNC Hex Bolt, 6.5"	6
21	17700-033	¾"-10 UNC Hex Locknut	6
22	22962-001	¾" Hardened Washer	12
		STEERTEK 1.5 Axle Assembly,	1
		250 Ackermann,	
	66928-004	Equipped with Hydraulic Brake,	
		Includes Key Nos. 23,24a,25a,26-42	
	66928-005	Equipped with Air Brake,	
		Includes Key Nos. 23,24b,25b,26-42	
23	66926-002	Axle & Kingpin Assembly	1
		LH Lower Steering Knuckle Assembly,	1
		250 Ackermann,	
24a	58900-067	Equipped with Hydraulic Brake	
24b	58900-095	Equipped with Air Brake	
		RH Lower Steering Knuckle Assembly,	1
		250 Ackermann,	
25a	58900-068	Equipped with Hydraulic Brake	
25b	58900-096	Equipped with Air Brake,	
26	60903-051	LH Upper Steering Knuckle Assembly	1
27	60904-034	RH Upper Steering Knuckle Assembly	1

KEY NO.	PART NO.	DESCRIPTION	NO.REQ.
	60961-039	**Kingpin Bushing w/Roller Thrust Bearing Service Kit, One Wheel End,**	
		Includes Key Nos.28-34 and Loctite	
28	59156-000	Grease Cap Assembly	4
29	58937-000	Retaining Ring	4
30	58909-000	Kingpin Bushing	4
	60961-042	**Roller Thrust Bearing Service Kit, One Wheel End,**	
		Includes Key Nos. 31-34 and Loctite	
31	64256-000	Roller Thrust Bearing	2
32		Kingpin Shim (As required)	
	60259-001	0.005" Thickness	4
	60259-002	0.047" Thickness	1
33	58910-001	Kingpin Seal	4
34	60236-001	⅝" Socket Head Cap Screw	4
Not Shown	60937-000	Loctite (Red) Compound Tube	2
	60961-069	**Stop Bolt Service Kit, One Side,**	
		Includes Key Nos. 35-36	
35	60238-001	½"-13 UNC Square Head Bolt	2
36	60240-000	½"-13 UNC Hex Jam Nut	2
37	68869-001	Tie Rod Assembly, 9K/10K/12K	1
		69 KPI, 5.36 Drop, 250 Ackermann	
		Includes Key Nos. 38-42	
	60961-626	******Tie Rod End Service Kit, Axle Set,**	
		Includes Kit Nos. 60961-624 & 60961-625	
	60961-624	******LH Tie Rod End Service Kit,**	
		Includes Key Nos. 38, 40-42	
	60961-625	******RH Tie Rod End Service Kit,**	
		Includes Key Nos. 39-42	
38	68935-001	***LH Tie Rod End	1
39	68935-002	***RH Tie Rod End	1
40		**⅞" Castle Nut,	2
		Included in Tie Rod Assembly	
41	22962-007	⅞" Flat Washer	2
42	17800-004	Tie Rod Nut Cotter Pin	2
43		*¾"-16 UNC U-bolt, 6.5"	4
44		*¾"-16 UNC Hex Locknut	8
45		*¾" Hardened Washer	8
46		*Auxiliary Spring	2

NOTE:

* Not supplied by Hendrickson, used for reference only. Refer to vehicle manufacturer for more information.

Hendrickson is not responsible for components supplied by vehicle manufacturer. For assistance with maintenance and rebuild instructions on these components see vehicle manufacturer.

** Item included in assembly only, part not sold separately.

*** The FCCC tie rod assembly is designed for use on a mechanical suspension with hydraulic brakes, it is not designed for vehicles with air brakes.

Hendrickson supplies different tie rod assemblies and each type may take a different replacement tie rod end kit to service. Prior to ordering find the part number on the tie rod tube, see Hendrickson Publication No. SEU-0223 or contact Hendrickson Sales Engineering for corresponding kit numbers.

Vehicles built prior to May 2010 with STEERTEK AXLE

9K/10K Capacity

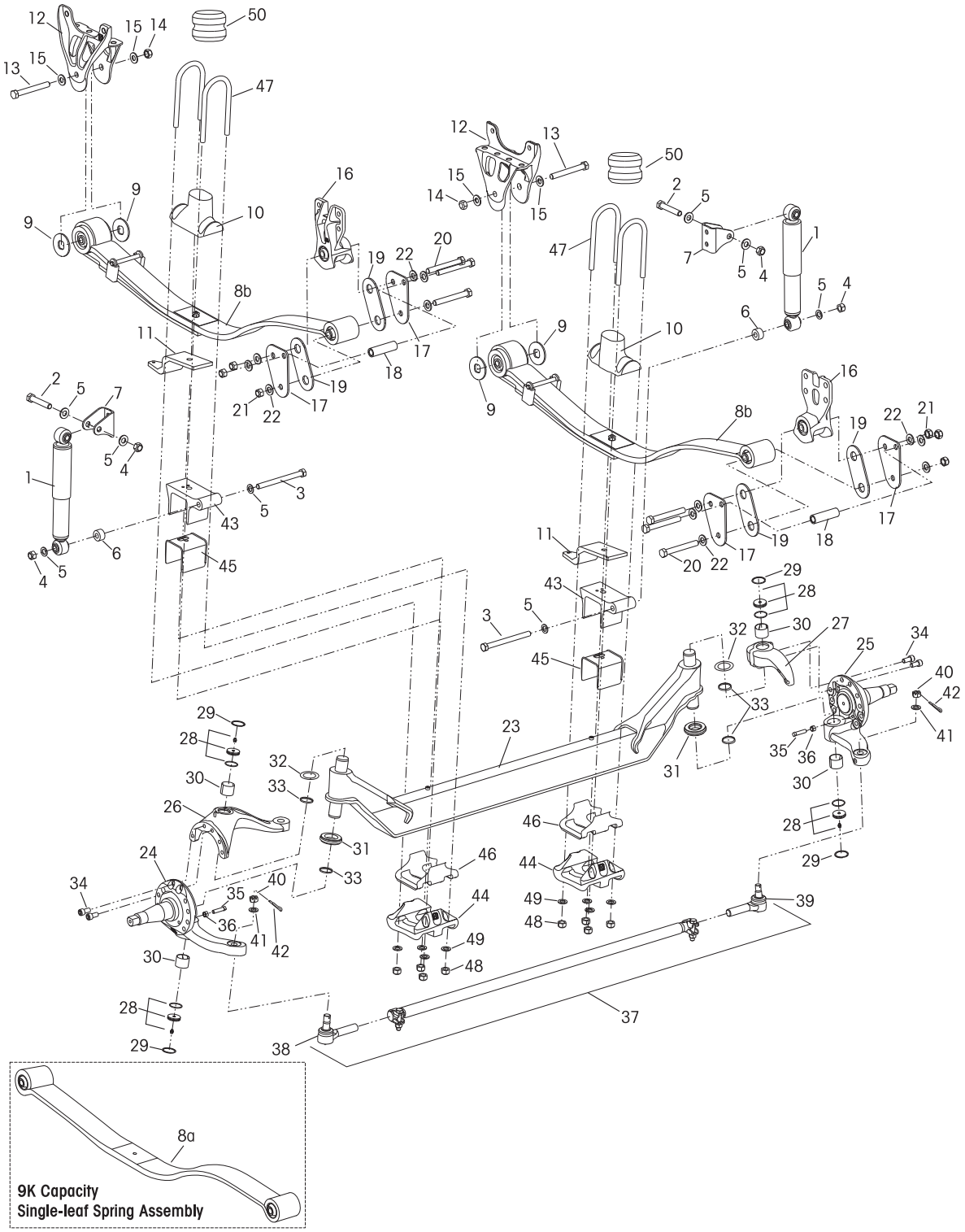

KEY NO.	PART NO.	DESCRIPTION	NO.REQ.
1		*Shock Absorber	2
2		*⅝"-11 UNC Upper Shock Bolt	2
3		*⅝"-11 UNC Lower Shock Bolt	2
4		*⅝"-11 UNC Hex Locknut	4
5		*⅝" Hardened Washer	8
6	59946-002	Shock Spacer	2
7	59423-002	Shock Bracket	2
		Spring Assembly, Includes Spring Eye Bushings	2
8a	66415-002	9K, Single-leaf	
8b	65710-002	10K, *Replaces 65710-001*	
9	67493-000	Thrust Washer - Front Hanger *Replaces 65899-000*	4
10	65925-000	Top Pad	2
11	66233-001	Sway Bar Bracket	2
12	66297-000	Front Hanger, *Replaces 65711-000*	2
13		*¾"-10 UNC Bolt	2
14		*¾"-10 UNC Locknut	2
15		*¾" Hardened Washer	4
16	64316-000	Rear Shackle Bracket and Bushing	2
17	66413-000	Rear Shackle Plate ***Rear Shackle Plate 64314-000, Replace with Conversion Kit No. 60961-180*	4
18	60631-000	Shackle Stop Tube	2
19	64159-000	Thrust Washer - Rear Hanger	4
20	58917-021	¾"-10 UNC Hex Bolt, 6.5"	6
21	17700-033	¾"-10 UNC Hex Locknut	6
22	22962-001	¾" Hardened Washer	12
	70952-XXX	**STEERTEK** Axle Assembly, Includes Key Nos. 23-46. Contact Hendrickson Tech Services for Part No.	1
23	64905-004	Axle & Kingpin Assembly	1
24		LH Lower Steering Knuckle Assembly	1
		•200 Ackermann	
	58900-063	Equipped with Hydraulic Brake	
		•250 Ackermann	
	58900-067	Equipped with Hydraulic Brake	
	58900-001	Equipped with Air Brake	
25		RH Lower Steering Knuckle Assembly	1
		•200 Ackermann	
	58900-064	Equipped with Hydraulic Brake	
		•250 Ackermann	
	58900-068	Equipped with Hydraulic Brake	
	58900-002	Equipped with Air Brake	
26	60903-051	LH Upper Steering Knuckle Assembly	1
27	60904-034	RH Upper Steering Knuckle Assembly	1
	60961-039	**Kingpin Bushing w/Roller Thrust Bearing Service Kit, One Wheel End,** Includes Key Nos.28-34 and Loctite	
28	59156-000	Grease Cap Assembly	4
29	58937-000	Retaining Ring	4
30	58909-000	Kingpin Bushing	4
	60961-042	**Roller Thrust Bearing Service Kit, One Wheel End,** Includes Key Nos. 31-34 and Loctite	
31	64256-000	Roller Thrust Bearing	2

KEY NO.	PART NO.	DESCRIPTION	NO.REQ.
32		Kingpin Shim (As required)	
	60259-001	0.005" Thickness	4
	60259-002	0.047" Thickness	1
33	58910-001	Kingpin Seal, *Replaces 58910-000*	4
34	60236-001	⅝" Socket Head Cap Screw	4
Not Shown	60937-000	Loctite (Red) Compound Tube	2
	60961-069	**Stop Bolt Service Kit, One Side,** Includes Key Nos. 35-36	
35	60238-001	½"-13 UNC Square Head Bolt	2
36	60240-000	½"-13 UNC Hex Jam Nut	2
37	60239-007	Tie Rod Assembly, 9/10K, 69 KPI, 5.36 Drop, 250 Ackermann Includes Key Nos. 38-42 *Replaces 64801-006*	1
	60961-010	******Tie Rod End Service Kit, Axle Set,** Includes Kit Nos. 60961-025 & -026 *Replaces 60961-081*	
	60961-025	******LH Tie Rod End Service Kit,** Includes Key Nos. 38, 40-42, *Replaces 60961-083*	
	60961-026	******RH Tie Rod End Service Kit,** Includes Key Nos. 39-42, *Replaces 60961-084*	
38	64000-001	****LH Tie Rod End, *Replaces 65033-001*	1
39	64000-002	****RH Tie Rod End, *Replaces 65033-002*	1
40		***⅞" Castle Nut, Included in Tie Rod Assembly	2
41	22962-007	⅞" Flat Washer	2
42	17800-004	Tie Rod Nut Cotter Pin	2
43	59952-024	Top Axle Wrap	2
44	64723-002	Bottom Axle Wrap	2
45	60508-000	Top Axle Wrap Liner	2
46	59845-000	Bottom Axle Wrap Liner	2
47		*¾"-16 UNC U-bolt, 10.0"	4
48		*¾"-16 UNC Hex Locknut	8
49		*¾" Hardened Washer	8
50		*Auxiliary Spring	2

Rear Shackle Plate Conversion Kit
No. 60961-180 (Includes Key Nos. 17-22)
Component replacement for vehicles built prior to June 2007

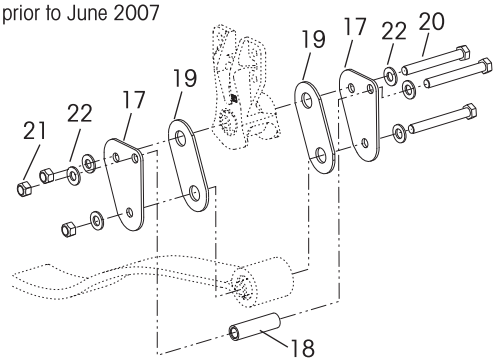

NOTE: * Not supplied by Hendrickson, used for reference only. Refer to vehicle manufacturer for more information.

Hendrickson is not responsible for components supplied by vehicle manufacturer. For assistance with maintenance and rebuild instructions on these components see vehicle manufacturer.

** No longer available. See Rear Shackle Plate Conversion Kit No. 60961-180.

*** Item included in assembly only, part not sold separately.

**** The FCCC tie rod assembly is designed for use on a mechanical suspension with hydraulic brakes, it is not designed for vehicles with air brakes.

Hendrickson supplies different tie rod assemblies and each type may take a different replacement tie rod end kit to service. Prior to ordering find the part number on the tie rod tube, see Hendrickson publication no. SEU-0223 or contact Hendrickson Sales Engineering for corresponding kit numbers.

SECTION 6

Towing Procedures

ON HIGHWAY AND ON ROADWAY

Hendrickson recommends that a vehicle equipped with a STEERTEK axle be towed by the following methods (listed in order of preference) for ON HIGHWAY or ON ROADWAY applications.

1. Wheel lift method, the ideal towing procedure
2. Conventional axle fork method

Please read, understand and comply with any additional towing instructions and safety precautions that may be provided by the vehicle manufacturer.

Hendrickson will not be responsible for any damage to the axle, suspension or other vehicle components resulting from any towing method or fixture not authorized by Hendrickson.

Please contact Hendrickson Tech Services at 630.910.2800 or send email to: techservices@hendrickson-intl.com with any questions regarding proper towing procedures for motorhome equipped with a STEERTEK axle.

WHEEL LIFT METHOD — IDEAL

This method provides the greatest ease for towing the vehicle. Lifting at the tires helps reduce the risk of possible damage to the axle, suspension, and engine components during towing operations, see Figure 6-1.

It may be necessary to raise the vehicle and place a block of wood under the tires to provide adequate clearance below the axle to locate the wheel lift equipment for towing, see Figure 6-2.

FIGURES 6-1 Wheel Lift Method

FIGURE 6-2 Block Under Tires

AXLE FORK LIFT METHOD

This is an alternative method for towing the vehicle, but requires standard 5" forks, see Figures 6-3 and 6-4, and designated lift points inside the axle clamp groups. The following procedure must be used:

- Place a spacer on the boom, to provide adequate clearance between the oil pan and the boom, if necessary. Lift the vehicle in order to place spacer under tires. This will provide sufficient room under the axle to locate forks in the proper position.
- Install the fork in the boom properly.
- Position the tow forks directly under the axle, inside the axle clamp groups as shown in Figure 6-3.

FIGURES 6-3 AND 6-4
Proper Tow Fork Location on inside clamp group on the STEERTEK Axle

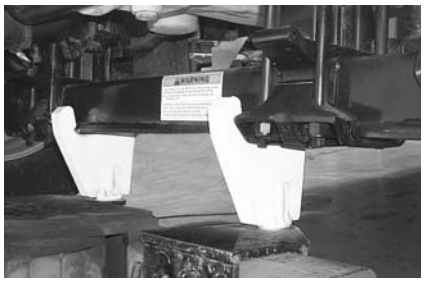

- Prior to lifting the vehicle, ensure that the bottom axle plate is flat in the tow fork to minimize any gap between the bottom axle plate and the tow fork, see Figure 6-5 and 6-6.

FIGURE 6-5 - Without Gap

FIGURE 6-6 - With Gap

NOTE

When lifting a vehicle with an under lift boom, care must be taken not to damage the engine's oil pan. Vehicles equipped with a front fairing may require removal of the front fairing prior to towing to prevent component damage.

- Lift vehicle and secure the vehicle to the boom.
- Install safety straps, it is preferred to use nylon safety straps. Chains have a tendency to bind and may cause damage to the axle.

OFF ROADWAY TOWING METHOD

WARNING

WHEN A VEHICLE IS DISABLED AND EQUIPPED WITH A STEERTEK AXLE, CARE MUST BE TAKEN TO ENSURE THERE IS NO DAMAGE TO THE SUSPENSION OR AXLE WHEN TOWING THE VEHICLE. THE USE OF A TOW STRAP IS NECESSARY TO TOW A DISABLED VEHICLE INTO A REPAIR FACILITY PARKING LOT INTO THE SHOP BAY. THE TOW STRAPS SHOULD BE CONNECTED TO THE TOW HOOKS PROVIDED BY THE VEHICLE MANUFACTURER AT THE FRONT OF THE BUMPER. IF THE USE OF TOW HOOKS IS NOT AN OPTION, THEN A TOW STRAP MAY BE WRAPPED AROUND THE FRONT AXLE, (SEE FIGURE 6-7) IN A MANNER THAT IS ACCEPTABLE FOR TOWING THE VEHICLE FROM A REPAIR FACILITY PARKING LOT INTO THE SHOP BAY. DO NOT USE A TOW CHAIN AROUND THE FRONT AXLE OR WITH A SINGLE POINT LOCATION TO TOW THE VEHICLE. DOING SO WILL DAMAGE THE AXLE AND VOID WARRANTY, SEE FIGURE 6-8.

THE FOLLOWING METHODS ARE NOT RECOMMENDED FOR ON HIGHWAY OR ON ROADWAY TOWING

FIGURE 6-7
NYLON STRAPS ARE ACCEPTABLE FOR OFF ROADWAY TOWING

FIGURE 6-8
CHAINS ARE NOT ACCEPTABLE FOR OFF ROADWAY TOWING

SECTION 7
Preventive Maintenance

The SOFTEK® is low maintenance suspension. Following appropriate inspection procedure is important to help ensure the proper maintenance and operation of the SOFTEK® suspension system and component parts function to their highest efficiency. Visual inspection must include the following items and other referenced in this section. Look for bent or cracked parts. Replace all worn or damaged parts.

HENDRICKSON RECOMMENDED PREVENTIVE MAINTENANCE INTERVALS

- **The first 1,000 miles**
- **On-highway** – every 10,000 miles (16,100 km) or 6 months, whichever comes first

COMPONENT INSPECTION

- **Clamp group** — Check torque on clamp group mounting hardware. Refer to the vehicle manufacturer's torque specifications.
- **Fasteners** — Look for any loose or damaged fasteners on the entire suspension. Make sure all fasteners are tightened to the specified torque. Refer to Torque Specifications Section of this publication. Use a calibrated torque wrench to check torque in a tightening direction. As soon as the fastener starts to move, record the torque. Correct the torque if necessary. Replace any worn or damaged fasteners.
- **Front hangers and rear shackle brackets** — Check for cracks or loose mounting hardware. Replace if necessary, see the Component Replacement Section of this publication for replacement procedure.
- **Front and rear thrust washers** – Look for any signs of excessive wear to the thrust washers. See Front and Rear Thrust Washer Inspection detailed in this section.
- **Shock absorbers** — Look for any signs of dents or leakage, misting is not considered a leak. See Shock Absorber Inspection in this section.
- **Steel leaf springs** — Look for cracks. Replace if cracked or broken. Check the front and rear bushing for any wear or deterioration. Replace if necessary, see the Component Replacement Section of this publication for replacement procedure.
- **Steering operation** — All steering components on the axle assembly must move freely through the full range of motion from axle stop to axle stop.
- **Steering pivot points** — Check for looseness at all pivot points on the axle assembly. Inspect and lubricate all pivot points. Refer to the Troubleshooting Guide Section of this publication.
- **STEERTEK axle** — The axle should be free of any nicks or gouges. Inspect for any cracks or dents on axle.
- **Tire wear** — Inspect tires for wear patterns that may indicate suspension damage or misalignment. See Tire Inspection in this section.
- **Top and bottom axle wrap liners (If equipped)** — Look for any cracking or broken pieces on liner in load bearing areas. See Axle Wrap Liner Inspection in this section.
- **Top pad and auxiliary spring** — Look for cracks and or missing auxiliary spring. Replace if necessary, see Component Replacement Section of this publication.
- **Wear and damage** — Inspect all parts of suspension for wear and damage. Look for bent or cracked parts. Replace all worn or damaged parts.

See the vehicle manufacturer's (OEM's) applicable publications for other preventive maintenance requirements.

CLAMP GROUP RE-TORQUE INTERVAL

FIGURE 7-1

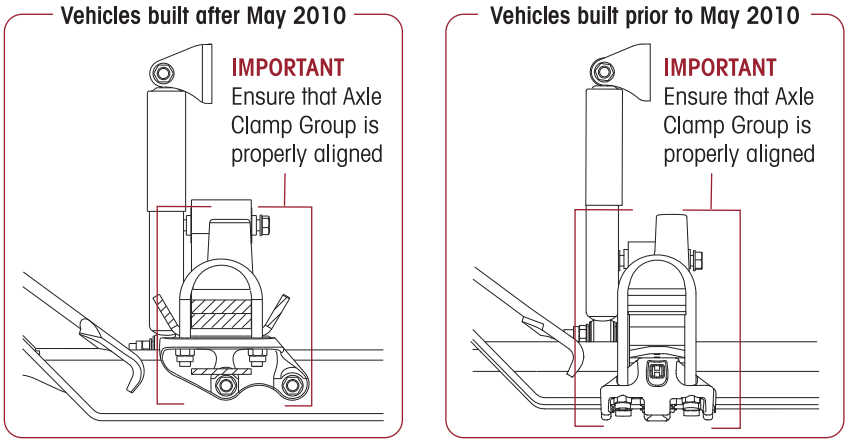

1. Clamp group locknuts must be torqued to specification at preparation for delivery.
2. Clamp group locknuts must be re-torqued at 1,000 miles.
3. Thereafter follow the 6 month inspection and annual re-torque interval.

WARNING

ENSURE CLAMP GROUP IS ALIGNED PROPERLY PRIOR TO TIGHTENING HARDWARE. FAILURE TO DO SO CAN CAUSE LOSS OF VEHICLE CONTROL, PROPERTY DAMAGE OR PERSONAL INJURY.

4. Ensure that the clamp group is properly aligned and the U-bolts are seated in the top pad, and the sway bar bracket is centered on the axle seat, see Figure 7-1.

FIGURE 7-2

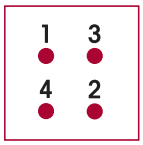

5. Tighten the clamp group locknuts evenly in 50 foot pound increments to the vehicle manufacturer's torque specifications in the proper pattern to achieve uniform bolt tension, see Figure 7-2.

LUBRICATION INTERVALS

For vehicles equipped with the STEERTEK axle, regular lubrication intervals should be followed to help prevent premature wear to the kingpin bushings and tie rod ends, see the lubrication chart below.

NOTE The recommended service lubrication interval is a guideline, the vehicle may require increased lubrication intervals depending on the severity of operation.

STEERTEK GREASING AND LUBRICATION SPECIFICATIONS

Component	Greasing Interval	Grease	NLGI Grade	Outside Temperature
Kingpin Bushings	Maximum of 25,000 miles (40,225 kilometers) or 90 days, whichever comes first	Multipurpose Grease	2	Refer to the lubricant manufacturer's specifications for the temperature service limits applicable to your area.
Tie Rod Ends				
Drag Link	See the vehicle manufacturer.			
NOTE: Lubrication greases acceptable for use on the STEERTEK axle will carry a designation of NLGI #2 EP and rated GC-LB or equivalent.				

KINGPIN LUBRICATION

FIGURE 7-3

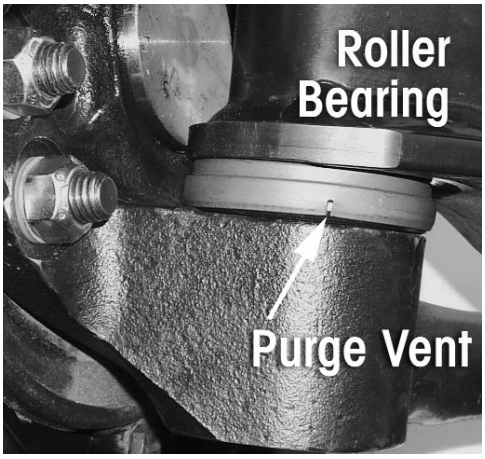

On the Hendrickson STEERTEK front axle the kingpin grease fittings are located on the top and bottom of the kingpin grease caps.

1. Place the vehicle on the ground.
2. Prior to greasing the kingpins on the vehicle, the suspension must be in a loaded condition.
3. Clean off all the grease fittings and the grease gun tip with a clean shop towel prior to lubrication.
4. Lubricate the kingpins through the grease fittings on the top and bottom of the steering knuckle, see Lubrication Specification chart above.
5. Force the required lubricant into the upper and lower kingpin grease fittings, until new lubricant flows from the upper axle beam and knuckle and the thrust bearing purge location, see Figure 7-3.

NOTE Greasing at the lower zerk should purge grease from the thrust bearing shell.

TIE ROD END LUBRICATION

LUBRICATION PROCEDURE

1. Turn the vehicle wheels straight ahead.
2. Wipe the zerk fitting and grease gun tip with clean shop towels.
3. Wipe the seal/boot clean with shop towels.
4. Attach a grease gun to the zerk fitting. Either a hand or pneumatic grease gun is acceptable. If air operated grease gun is used, system air pressure should not exceed 150 psi (1035 kPa).

CAUTION EXCEEDING THE MAXIMUM AIR PRESSURE TO THE ZERK FITTING CAN CAUSE DAMAGE TO THE DUST BOOT AND COMPONENT FAILURE.

FIGURE 7-4

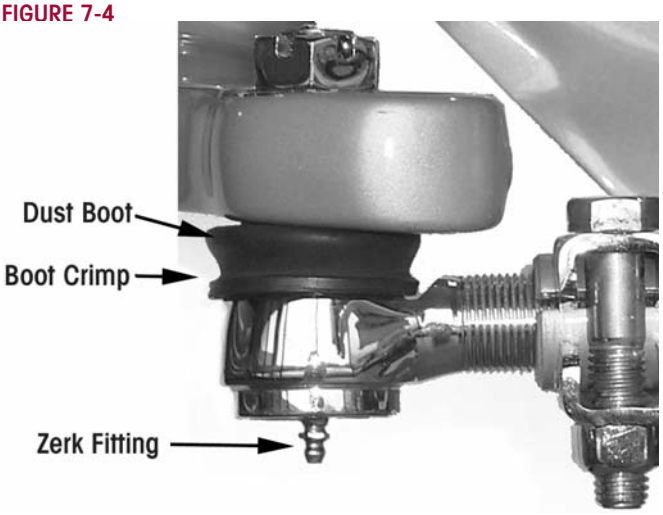

5. Dirt, water, and discolored old grease should flow from the relief vents or purge holes near the boot crimp or bellows area, see Figure 7-4. Continue to purge grease until fresh grease flows from the purge area.
6. If the tie rod end is designed for lube service and it will not accept grease proceed as follows:

a. Remove the zerk fitting.
b. Inspect the threaded zerk fitting hole in the tie rod end and remove any obstructions.
c. Install a new zerk fitting.
d. Continue the lubrication procedure.
e. If the tie rod end will not accept grease following this procedure it will be necessary to replace the tie rod end, see Tie Rod End replacement in the Component Replacement Section of this publication.

7. Apply grease until all the old grease is purged from the boot and fresh grease is coming out.

TIE ROD END INSPECTION

INSPECTION PROCEDURE

Before beginning this inspection procedure, the entire system must be unloaded (i.e., the front end of the vehicle must be raised and supported with safety stands).

CAUTION DO NOT GREASE THE TIE ROD ASSEMBLY BEFORE PERFORMING THE INSPECTION. DOING SO CAN INHIBIT EFFORTS TO DETERMINE ACTUAL WEAR.

CAUTION REPLACE THE ENTIRE TIE ROD END IF THE BOOT IS TORN OR MISSING, FAILURE TO DO SO CAN CAUSE PREMATURE WEAR OF THE TIE ROD END.

1. Block rear wheels of vehicle. Using the bottom of the axle beam or the frame rails, raise the front end off the ground and support with stands.
2. With the engine off, turn the wheels from full left to full right and then return to the straight-ahead position.
3. Check that the boots are in place and completely installed over the tie rod ends.
4. Check for cracking or tears in the boots. Also check the boot seals for damage. Replace the entire tie rod end if the boot is damaged.

WARNING THE COTTER PIN MUST BE INSTALLED CORRECTLY THROUGH THE TIE ROD END WITH THE CASTLE NUT TIGHTENED TO TORQUE SPECIFICATION IN ORDER TO SECURELY ATTACH THE TIE ROD. LOSS OF THE COTTER PIN CAN CAUSE THE TIE ROD END NUT TO BECOME LOOSE AND ADVERSELY AFFECT VEHICLE STEERING AND POSSIBLY RESULT IN TOTAL LOSS OF STEERING CONTROL.

5. Check that the tie rod end nut is installed and secured with a cotter pin. If the cotter pin is missing, check the nut torque specification and then install a new cotter pin. Always tighten the castle nut to specified torque when setting the cotter pin. **DO NOT** back off the nut to insert cotter pin.

WARNING IT IS CRITICAL TO CHECK THE 5/8" TIE ROD CLAMP BOLT HEAD LOCATION TO VERIFY THE CLAMP FASTENERS HAVE SUFFICIENT CLEARANCE AWAY FROM THE LOWER SHOCK MOUNT AT FULL WHEEL CUT. THE FASTENERS MUST NOT CONTACT THE LOWER SHOCK MOUNT. FAILURE TO DO SO CAN CAUSE ONE OR MORE COMPONENTS TO FAIL CAUSING LOSS OF VEHICLE CONTROL AND POSSIBLE PERSONAL INJURY OR PROPERTY DAMAGE.

6. Verify the 5/8" tie rod clamp bolt head does not contact the lower shock mount at full wheel cut, see Figure 7-5.

WARNING THE THREADED PORTION OF THE TIE ROD END MUST EXTEND PAST THE SLOTS INTO THE TIE ROD CROSS TUBE, SEE FIGURE 7-5. FAILURE TO DO SO CAN CAUSE COMPONENT DAMAGE, LOSS OF VEHICLE CONTROL AND POSSIBLE PERSONAL INJURY OR PROPERTY DAMAGE

7. Check that the tie rod end is threaded correctly into the cross tube and is engaged deeper than the end of the cross tube slot. The tie rod end must be visible the entire length of the cross tube slot, see Figure 7-5.

FIGURE 7-5

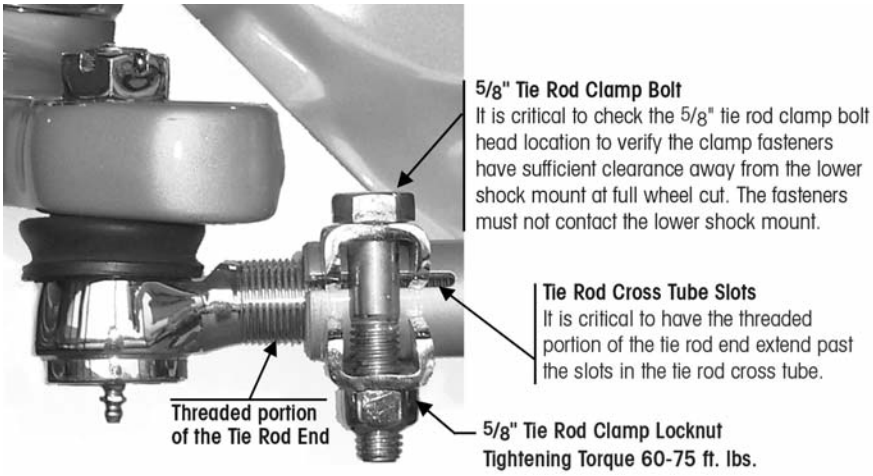

8. Check that zerk fittings are installed. Replace a damaged zerk fitting with a new one.

CAUTION

DO NOT USE THE FOLLOWING ITEMS OR METHODS TO CHECK FOR MOVEMENT OF THE TIE ROD ASSEMBLY, WHICH CAN CAUSE DAMAGE TO COMPONENTS:

- A CROW BAR, PICKLE FORK OR 2 x 4 ARE USED.
- ANYTHING OTHER THAN HANDS USED TO GRASP AND ROTATE THE CROSS TUBE ASSEMBLY (CAN RESULT IN DAMAGE TO THE CROSS TUBE).
- EXCESSIVE PRESSURE OR FORCE IS APPLIED TO THE TIE ROD ENDS OR THE JOINTS OF THE ASSEMBLY.

9. Either by hand or using a pipe wrench (pipe wrench method requires jaw protectors to avoid gouging the cross tube), rotate the cross tube toward the front of the vehicle and then toward the rear. After rotating, center the cross tube. If the cross tube will not rotate in either direction, replace both tie rod ends, see Figure 7-6.

FIGURE 7-6

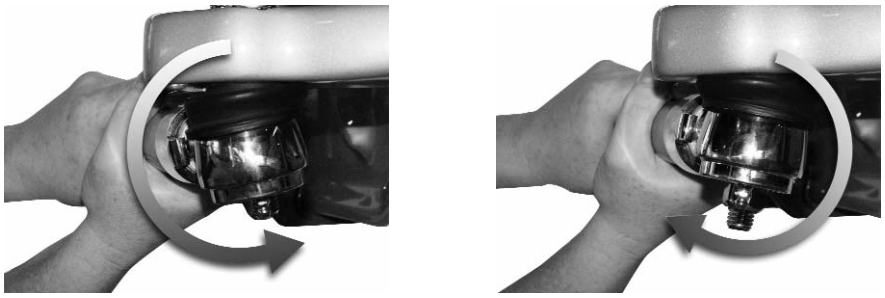

10. Position yourself directly below the tie rod end. Using both hands, grab the assembly end as close to the tie rod end as possible (no more than 6" or 152.4mm). Apply hand pressure with reasonable human effort vertically up and down in a push-pull motion several times (using approx. 50-100 pounds of force). Check for any movement or looseness at both tie rod end locations, see Figure 7-7.

FIGURE 7-7

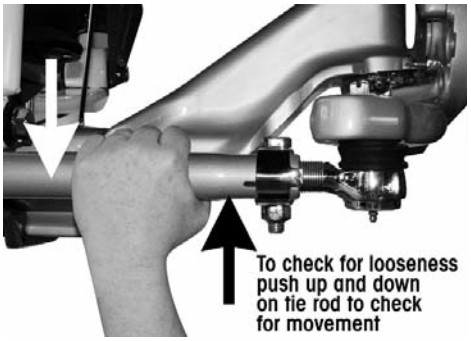

FIGURE 7-8

11. If there is any movement in the tie rod assembly, install a magnetic based dial indicator on the Ackermann arm, see Figure 7-8.
12. Set the dial indicator to zero.
13. Apply hand pressure with reasonable human effort vertically up and down in a push-pull motion several times (using approx. 50-100 pounds of force). Observe the reading on the dial indicator.
14. If the reading is more than 0.060", replace both tie rod ends at the next service interval.
15. If a tie rod end exhibits 0.125" of movement by hand, the vehicle should be removed immediately from use and the tie rod end be replaced.

NOTE

According to the Commercial Vehicle Safety Alliance (CVSA), the "out of service" criteria for any commercial vehicle is: Any motion other than rotational between any linkage member and its attachment point of more than 1/8" (3mm) measured with hand pressure only. (393.209(d)), (published in the North American Standard Out-of-Service Criteria Handbook, April 1, 2006.)

TIRE INSPECTION

According to TMC (Technology & Maintenance Council), the leading potential causes of tire wear are the following in order of importance:

1. Tire Pressure
2. Toe Setting
3. Thrust Angle
4. Camber

The following tire Inspection guidelines are based upon TMC recommended practices. Any issues regarding irregular tire wear where Hendrickson is asked for assistance will require tire and alignment maintenance records as described in the TMC literature number RP642 or TMC "Guidelines for Total Vehicle Alignment" publication.

Tire wear is normally the best indicator of vehicle alignment condition. If tires are wearing too rapidly or irregularly, alignment corrections may be needed. The tire wear patterns described below can help isolate specific alignment problems.

The most common conditions of concern are:

- Overall Fast Wear (Miles per 32nd)
- Feather Wear
- Cupping
- Diagonal Wear
- Rapid Shoulder Wear (One Shoulder Only)
- One-Sided Wear

FIGURE 7-9

OVERALL FAST WEAR (Miles per 32nd)

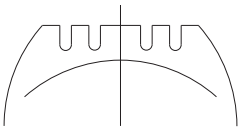

Overall Fast Wear — Fast wear can be described as exhibiting a good, but accelerated wear pattern. It is typically caused by operating conditions, such as mountainous terrain, frequency and severity of turning, abrasive road surfaces in combination with vehicle configurations and their attributes-such as power steering, heavy axle loads, high wheel cuts, setback axles, short wheel base tractors, long wheel base straight trucks. To correct this problem, consult with vehicle and tire manufacturer's when specifying equipment or replacing tires. For more information, see TMC RP 219 publication, page 11. For information on how to accurately measure and record tire rates, see TMC RP 230 publication.

FIGURE 7-10

FEATHER WEAR

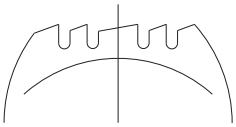

Feather Wear — Tread ribs or blocks worn so that one side is higher than the other resulting in step-offs across the tread face. Generally, ribs or blocks exhibit this wear. To spot this problem, do the following:

With one hand flat on the tread of the tire and a firm down pressure, slide your hand across the tread of the tire. In one direction, the tire will feel smooth and in the opposite direction there will be a sharp edge to the tread. Typical causes of feather wear include: excessive side force scrubbing, resulting from conditions of misalignment such as excessive toe, drive axle misalignment, worn, missing or damaged suspension components, bent tie rods or other chassis misalignment.

To correct this problem, tires can be rotated to another axle for maximum utilization of remaining tread. Additionally, diagnose the vehicle itself and correct misalignment condition as required. If steer tire feathers are in opposite directions, an improper toe condition is most likely the cause. For more information, see TMC RP 219A publication, page 5.

If feather wear on both steer tires is in the same direction, drive axle or other chassis misalignment is indicated. If one steer tire shows feather wear and the other steer tire has normal wear, a combination of toe and drive axle or chassis misalignment is indicated.

FIGURE 7-11

CUPPING

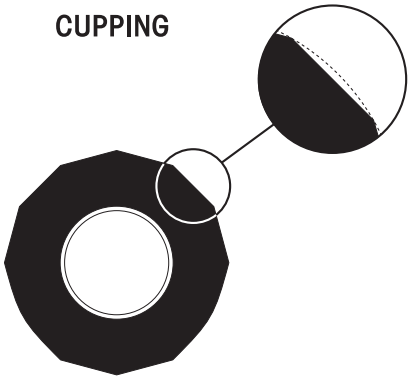

Cupping — Localized, dished out areas of fast wear creating a scalloped appearance around the tire. Cupping, which appears around the tire on the shoulder ribs, may also progress to adjoining ribs. See TMC RP 219A publication, page 7.

Cupping is usually a result of moderate-to-severe imbalance, improper rim/wheel mounting, excessive wheel endplay or other assembly non-uniformity. It can also be due to lack of shock absorber control on some suspension types.

To solve cupping problems:

- *Tires* – Correct mismount or balance problem. If ride complaints arise, steer tires may be rotated to drive or trailer axle.
- *Vehicle* – Diagnose component imbalance condition, i.e., wheel, rim, hub, brake, drum. Correct as necessary.

FIGURE 7-12

DIAGONAL WEAR

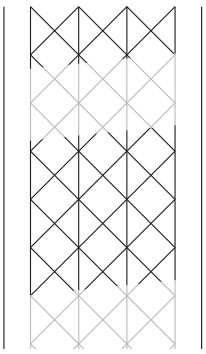

Diagonal Wear — Can be described as localized flat spots worn diagonally across the tread at approximately 25-35° angles, often repeating around the tread circumference. For more information, see TMC RP 219A publication, page 20.

Diagonal wear is usually caused by bad wheel bearings, toe-out, mismounting of tire and wheel assembly to axle, and mismatched duals for size and/or inflation pressures. It may start as brake skid. Diagonal wear is aggravated by high speed empty or light load hauls.

To correct diagonal wear, reverse direction of rotation of the tire. If wear is excessive, true or retread. If the source of trouble is the vehicle, diagnose cause and correct as needed.

FIGURE 7-13

RAPID SHOULDER WEAR (One Shoulder Only)

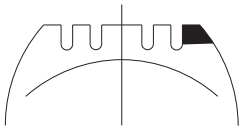

Rapid Shoulder Wear (One Shoulder Only) — Is defined as a tire worn on the edge of one shoulder, sometimes extending to inner ribs. It can progress to diagonal wipeout. For more information, see TMC RP 219A publication, page 22.

This wear condition is usually caused by excessive toe or excessive camber. These conditions can be created by a misaligned or bent axle and can also be caused by loose or worn wheel bearings.

To correct this type of rapid shoulder wear:

- *Tires* – Change direction of rotation of tire. If shoulder wear is severe, remove and retread.
- *Vehicle* – Diagnose misalignment and/or mechanical condition and correct.

FIGURE 7-14

ONE-SIDED WEAR

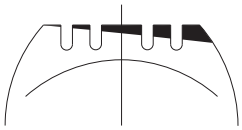

One-sided wear — Is excessive wear on one side of tire extending from the shoulder towards the center of the tread. For more information, see TMC RP 219A, page 26.

One-sided wear is usually caused by improper alignment, worn kingpins, loose wheel bearings, excessive camber, excessive axle loads, non-parallel axles, or non-uniform tire and wheel assembly caused by improper bead seating or bent wheel.

To correct one-sided wear:

- *Tires* – Depending on severity, rotate tires to another axle position or, if worn to minimum tread depths, submit for possible retreading.
- *Vehicle* – Diagnose mechanical problem and correct.

SHOCK ABSORBER INSPECTION

NOTE

This component is not supplied by Hendrickson. Hendrickson is not responsible for components supplied by the vehicle manufacturer. For assistance with maintenance and rebuild instructions on this component, see the vehicle manufacturer.

Inspection of the shock absorber can be performed by doing a heat test, and a visual inspection. For instructions on shock absorber replacement see the Component Replacement Section of this publication. It is not necessary to replace shock absorbers in pairs if one shock absorber requires replacement.

HEAT TEST

1. Drive the vehicle at moderate speeds on rough road for minimum of fifteen minutes.

WARNING

DO NOT GRAB THE SHOCK AS IT COULD POSSIBLY CAUSE PERSONAL INJURY.

2. Lightly touch the shock body carefully below the dust cover, see Figure 7-15.
3. Touch the frame to get an ambient reference. A warm shock absorber is acceptable, a cold shock absorber should be replaced.
4. To inspect for an internal failure, remove and shake the suspected shock. Listen for the sound of metal parts rattling inside. Rattling of metal parts can indicate that the shock has an internal failure.

FIGURE 7-15

VISUAL INSPECTION

Look for these potential problems when doing a visual inspection. Inspect the shock absorbers fully extended. Replace as necessary.

FIGURE 7-16

Damaged upper or lower mount | Damaged upper or lower bushing | Damaged dust cover and/or shock body | Bent or dented shock | Improper installation example: washers (if equipped) installed backwards.

LEAKING VS. MISTING SHOCK VISUAL INSPECTION

The inspection must not be conducted after driving in wet weather or a vehicle wash. Shocks need to be free from water. Many shocks are often mis-diagnosed as failures. Misting is the process whereby very small amounts of shock fluid evaporate at a high operating temperature through the upper seal of the shock. When the "mist" reaches the cooler outside air, it condenses and forms a film on the outside of the shock body. Misting is perfectly normal and necessary function of the shock. The fluid, which evaporates through the seal area helps to lubricate and prolong the life of the seal.

FIGURE 7-17

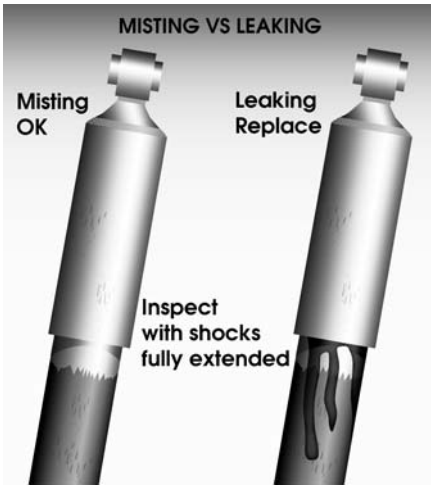

A shock that is truly leaking and needs to be replaced will show signs of fluid leaking in streams from the upper seal. These streams can easily be seen when the shock is fully extended, underneath the main body (dust cover) of the shock. Look for these potential problems when doing a visual inspection. Inspect the shock absorbers fully extended. Replace as necessary.

NOTE The SOFTEK suspension is equipped with a premium seal on the shock, however this seal will allow for misting to appear on the shock body (misting is not a leak and is considered acceptable).

If the shock is damaged install new shock absorber as detailed in the Component Replacement Section of this publication.

FRONT THRUST WASHER INSPECTION

In normal use these components will function satisfactorily, even though the components may show some wear. An indication that the front shackle thrust washers are worn, or need replacement is when the suspension exhibits one or more of the following conditions:

FIGURE 7-18

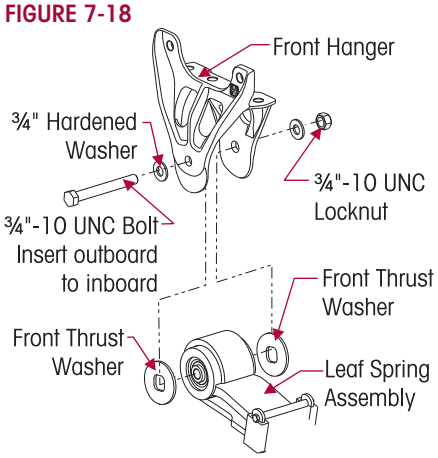

1. Excessive lateral movement of the spring.
2. The front thrust washers are in contact with the front hanger, see Figure 7-18.
3. Thrust washer thickness can be measured with a micrometer or a ruler.
   - The minimum thickness allowable for a thrust washer is 3/32" (0.090").
   - If one or more of these conditions is experienced, disassembly of the front hanger assembly is required to replace the thrust washers.
   - If one thrust washer is worn out, Hendrickson recommends both thrust washers on that side of the suspension be replaced. Inspect the thrust washers on the other side of the vehicle and replace if necessary. See Shackle Thrust Washer replacement procedure in Component Replacement Section of this publication.

REAR THRUST WASHER INSPECTION

FIGURE 7-19

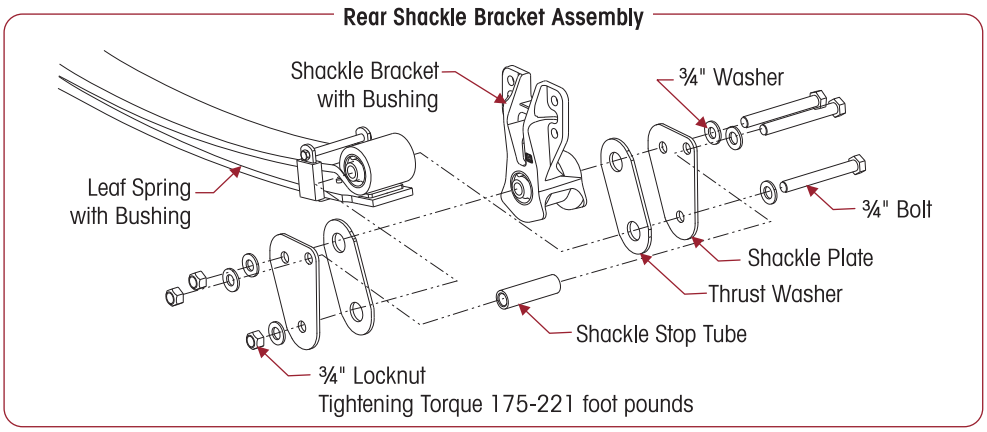

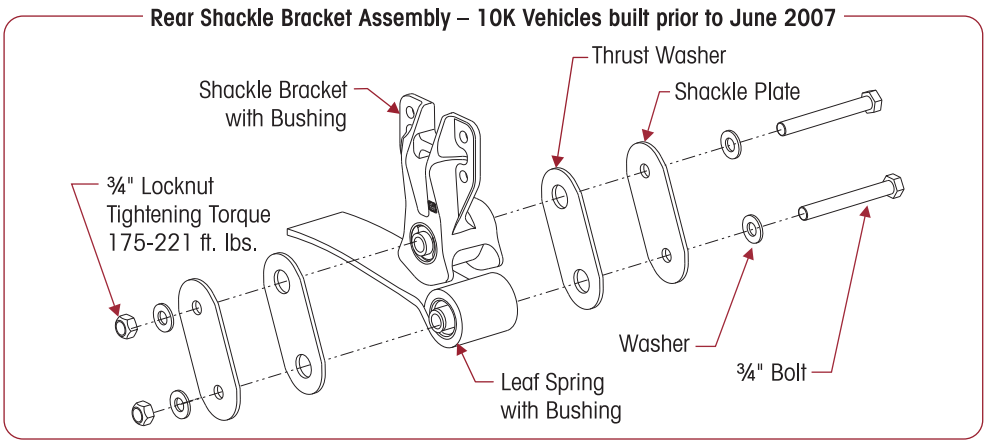

In normal use these components will function satisfactorily, even though the components may show some wear. An indication that the rear shackle thrust washers are worn, or need replacement is when the suspension exhibits one or more of the following conditions:

1. Excessive lateral movement of the spring.
2. The rear thrust washers are in contact with the shackle plates.
3. Thrust washer thickness can be measured with a micrometer or a ruler.
   - The minimum thickness allowable for a thrust washer is 3/32" (0.090").
   - If one or more of these conditions is experienced, disassembly of the rear shackle assembly is required to replace the thrust washers.
   - If one thrust washer is worn out, Hendrickson recommends both thrust washers on that side of the suspension be replaced. Inspect the thrust washers on the other side of the vehicle and replace if necessary. See Shackle Thrust Washer replacement procedure in Component Replacement Section of this publication.

STEERING KNUCKLE INSPECTION

CHECKING VERTICAL END PLAY (UP AND DOWN MOVEMENT)

The operating spec for vertical clearance on the steering knuckle is 0.008" to 0.030".

FIGURE 7-20

1. Chock the rear tires to help prevent the vehicle from moving.
2. Set the parking brakes.
3. Use a jack to raise the vehicle until both tires are 1" off the ground.
4. Place a dial indicator on each side of the axle as follows:
   a. Index the wheels slightly (left or right).
   b. Place the magnetic dial indicator base on the axle, see Figure 7-20.
   c. Place the tip of the dial indicator on the top of the upper steering knuckle (not on the grease cap).
5. Set the dial indicator to "0" (zero).
6. Lower the jack.
7. If vertical clearance is greater than 0.030" adjust the upper knuckle to obtain specification, if adjustment does not achieve specification, install shims (Hendrickson part no. 60259-002) between the top of the axle and the bottom of the upper steering knuckle to obtain the proper clearance specification. See Steering Knuckle Assembly in the Component Replacement Section of this publication for proper shim installation to achieve acceptable vertical clearance.
8. If vertical clearance is below 0.008", adjust the upper steering knuckle to obtain the proper clearance specification, if adjustment does not achieve specification, remove shims. See Steering Knuckle Assembly in the Component Replacement Section of this publication for proper shim removal to achieve acceptable vertical clearance.
9. Remove wheel chocks.

KINGPIN BUSHING INSPECTION

INSPECTION PROCEDURE

1. Chock the wheels to help prevent the vehicle from moving. Set the parking brake.
2. Use a jack to raise the vehicle until the wheels are off the ground. Support the vehicle with safety stands.
3. **CHECKING THE UPPER KINGPIN BUSHING.** Install the base of a dial indicator onto the axle beam, see Figure 7-21.
4. Set the dial indicator to "0" zero.
5. Move the top of the tire in and out by applying reasonable constant pressure and then release, see Figure 7-23.
6. Check the reading on the dial indicator. If the dial indicator moves more than 0.015", the upper bushing is worn or damaged. Replace both bushings. Refer to the Kingpin Bushing replacement procedure in the Component Replacement Section of this publication.

FIGURE 7-21

FIGURE 7-22

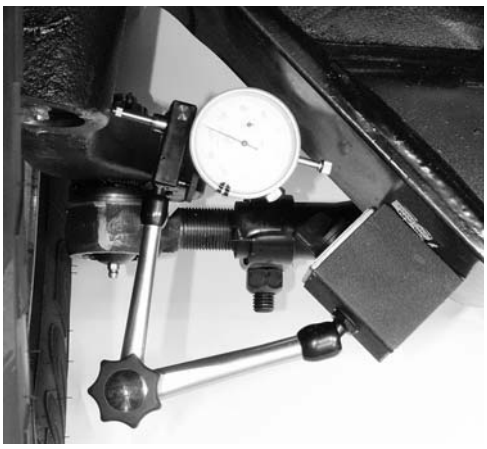

7. **CHECKING THE LOWER KINGPIN BUSHING.** Install a dial indicator so that the base is on the axle and the indicator tip is against the inside of the bottom of the knuckle, see Figure 7-22.
8. Set the dial indicator to "0" zero.
9. Move the bottom of the tire in and out. If the dial indicator moves more than 0.015", the lower bushing is worn or damaged. Replace both kingpin bushings., refer to the Component Replacement Section of this publication.

NOTE If one bushing is worn or damaged, it is mandatory to replace both the top and bottom bushings on that knuckle assembly.

10. Remove jack stands and lower the vehicle.
11. Remove wheel chocks.

FIGURE 7-23

AXLE WRAP LINER INSPECTION (If equipped)

Vehicles built prior to May 2010

INSPECTION PROCEDURE

- Axle wrap liners are installed on the STEERTEK axle to help prevent any type of abrasion on the axle at the clamp group area. Any time an axle wrap is removed it is mandatory that the axle wrap liner be replaced.
- Liner Crack Criteria:

  It is possible for the axle wrap liner to crack during service. If the liner is cracked and all the pieces are intact it is not necessary to replace the liner. If the liner is broken out and there are pieces missing the liner must be replaced immediately, see Figure 7-24. See Axle Wrap replacement in Component Replacement Section of this publication.

FIGURE 7-24

Axle Wrap Liners
Unacceptable Cracks

SECTION 8
Alignment & Adjustments

ALIGNMENT DEFINITIONS

FIGURE 8-1

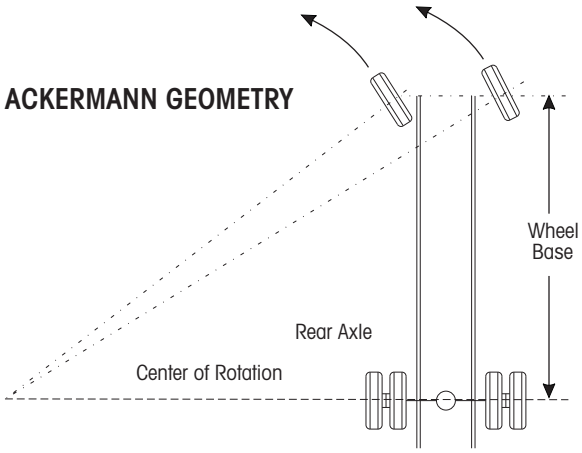

Ackermann Steering Geometry — The geometry of the four bar linkage consisting of the front axle beam pivot points, tie rod arms, and cross tube and attempts to provide free rolling of front tires in a turn. Ackermann geometry is dependent upon the steering axle track-width and wheelbase of the vehicle. Improper geometry results in wheel scrub in turns which generally appears as toe wear on the tire, usually more wear on one side of the vehicle than the other due to the operational route of the vehicle.

Bump Steer (Feedback) — The feedback felt through the steering linkage to the steering wheel when a steer axle tire hits a bump in the road. This occurs because the axle-end of the drag link and the axle attachment point of the spring do not travel in parallel circular arcs as the suspension moves up and down. This condition can also be caused by trapped air in the power steering system.

FIGURE 8-2

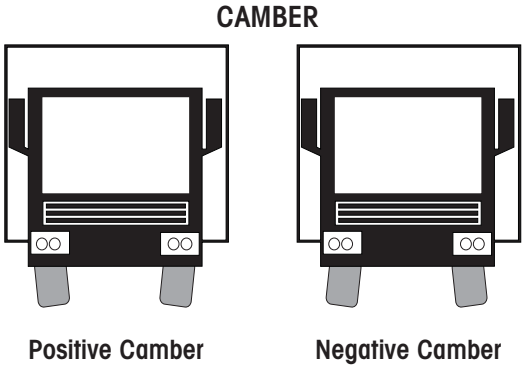

Camber — The angle formed by the inward or outward tilt of the wheel reference to a vertical line. Camber is positive when the wheel is tilted outward at the top and is negative when the wheel is tilted inward at the top.

Excessive positive camber may cause smooth wear on the outer half of the tire tread. Excessive negative camber may cause wear on the inner half of the tread. Static-unloaded camber angles are built into the axle to put the loaded tire perpendicular to the road.

FIGURE 8-3

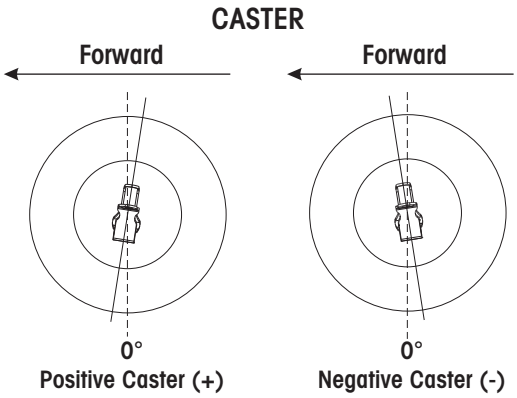

Caster — The forward or rearward tilt of the steering axle kingpin in reference to a vertical line. The angle is measured in degrees. Caster is positive when the top of the steering axis is titled rearward and is negative when the tilt is forward. Proper caster is important for directional stability and returnability. Too much positive caster can cause shimmy, excessive steering effort and is normally a vehicle performance and handling consideration. Uneven positive caster may create a steering pull toward the side with the lower caster. This attribute may be used to compensate for crowned roads.

FIGURE 8-4

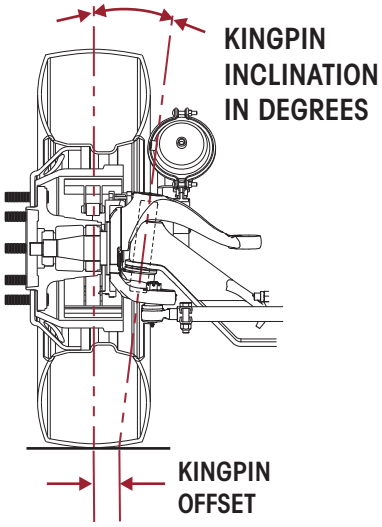

Kingpin Inclination — The inward tilt of the kingpin from the vertical. This front suspension parameter has a pronounced effect on steering effort and returnability. As the front wheels are turned around an inclined kingpin, the front of the truck is lifted. This lifting of the vehicle is experienced as steering effort when the turn is executed and exhibits itself as recovery force when the steering wheel is released.

Kingpin Offset — The distance between the center of the tire patch and intersection of the kingpin axis with the ground. This parameter of front end geometry is important in vehicles without power steering and has a major effect on static steering. If there is no kingpin offset, the tires must scrub around the center of the pin patch when turned in a static condition, resulting in higher static steering efforts.

Steering Arm — The component that connects the drag link to the axle knuckle assembly.

FIGURE 8-5

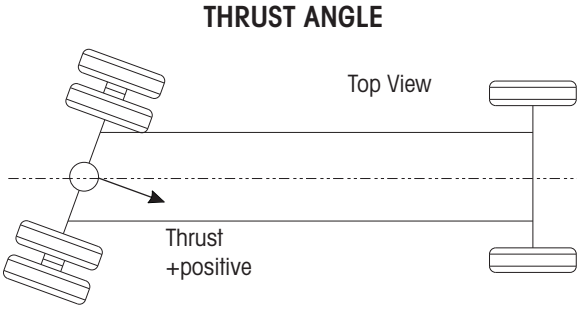

Thrust Angle, Tracking, or Square — The angle formed by the centerline of the vehicle frame (geometric centerline) and the direction that an axle points. As indicated by the term "square", the ideal value for the angle is 0° or when the axle centerline is at 90° or perpendicular to the geometric centerline. Thrust or tracking to the right is positive, and to the left is negative. A steering correction is required to offset the effect of the thrust angles and keeps the vehicle traveling in a straight line. It results in a lateral offset between the steer and drive axle tires commonly referred to as "dog tracking."

Tie Rod Arm (Ackermann-Arm, Cross Tube Arm) — The component that transmits steering forces between left and right axle knuckle assemblies through the cross tube assembly.

FIGURE 8-6

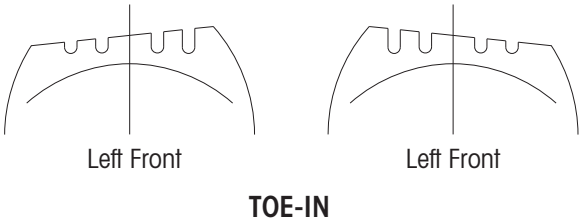

Toe-in — is when the horizontal line intersects in front of the wheels, or the wheels are closer together in front than in the back. Toe-in is commonly designated as positive, toe-out as negative. Excessive toe-in wears the outside edge of the tires. Steer axle toe is adjustable to reduce wear to the leading edge of the tire and also to avoid road wander. Toe is adjusted in a static, unloaded condition so that the tires will run in a straight line under a dynamic, loaded condition.

FIGURE 8-7

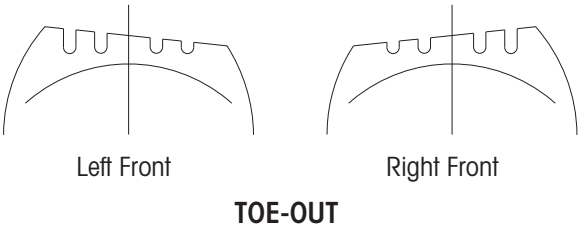

Toe-out — Is when the horizontal lines intersect behind the wheels, or the wheels are closer together in back than in front. Toe-in is commonly designated as positive, toe-out as negative. Excessive toe-out wears the inside edge of the tires. Steer axle toe is adjustable to reduce wear to the leading edge of the tire and also to avoid road wander. Toe is adjusted in a static, unloaded condition so that the tires will run in a straight line under a dynamic, loaded condition.

Toe-Out on Turns — (See Ackermann Geometry). Excessive turning angles may contribute to premature tire wear. Be advised that the greater turning angles, the more that toe and camber change. If you have any doubt regarding the optimum turning angles for your operation, contact the vehicle's manufacturer, axle manufacturer, tire manufacturer and alignment equipment manufacturer for advice.

Total Toe — The angle formed by two horizontal lines through the planes of two wheels. Steer axle toe Is adjustable to reduce wear to the leading edge of the tire and also to avoid road wander. Toe is adjusted in a static, unloaded condition so that the tires will run in a straight line under a dynamic, loaded condition.

FIGURE 8-8

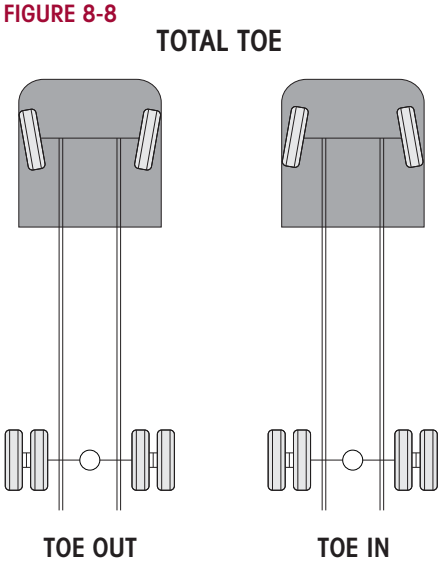

INSPECTION PRIOR TO ALIGNMENT

WHEELS AND TIRES

Examine the following items:

- The tires are inflated to the manufacturer's specified tire pressure.
- The steer axle tires are the same size and type.
- The lug nuts are tightened to the manufacturer's specified torque.
- The wheels are balanced and check for tire to rim runout.
- The wheels and tires are free of excessive wear and damage.
- Wheel bearing end play is within the vehicle manufacturer, or chassis and body manufacturer's specification.

FRONT SUSPENSION

Inspect the following:

- All fasteners are installed and tightened to the specified torque. See Torque Specifications Section of this publication.
- Leaf springs are free of wear or damage.
- Shock absorbers are free of wear and damage.
- Front and rear spring mounts for wear or damage.

INSPECT TIE ROD ENDS

Perform "Tie Rod Inspection" procedure refer to the Preventive Maintenance Section of this publication.

REAR AXLE AND REAR SUSPENSION

Rear axle misalignment can cause front tire wear. If the outer edge of one front tire is worn and the inner edge of the other front tire is worn, check the following:

- Make sure the rear axle (especially a tandem axle) is correctly aligned and the ride height is within specifications (if equipped). Refer to the procedure provided by the vehicle or suspension manufacturer.
- All fasteners including U-bolts (if applicable) are installed and tightened to the specified torque.
- The leaf springs are not worn or damaged.

- The bushings in the leaf springs are not worn or damaged.
- The torque rods (if used) are correctly adjusted (if adjustable).
- The frame is not bent or twisted.
- Refer to any additional recommendations and specifications from the manufacturer of vehicle on rear axles and suspensions. Reference the TMC (The Technology & Maintenance Council) Guidelines for Total Vehicle Alignment.

FRONT WHEEL ALIGNMENT

Hendrickson recommends technicians review TMC's publication, TMC (Technology & Maintenance Council) Guidelines for Total Vehicle Alignment (TMC RP642).

Check the total (front and rear) vehicle wheel alignment when the following occur:

- Every 12-18 months (normal maintenance).
- When the vehicle does not steer correctly.
- To correct a tire wear condition.

For rear wheel alignment specifications and adjustment refer to the vehicle manufacturer.

The SOFTEK front wheel alignment specifications can be found in the Alignment Section of this publication. There are two types of *front wheel alignment*:

1. *Minor alignment* – a minor front wheel alignment is done **for all** normal maintenance conditions, see below.
2. *Major alignment* – a major alignment is done when uneven or excessive tire wear is evident, or response at the steering wheel is sluggish, or the need for major wheel alignment check and adjustment is required, see below.

MINOR FRONT WHEEL ALIGNMENT

Perform the minor front wheel alignment in the following sequence:

1. Inspect all systems that affect wheel alignment. Refer to Inspection Prior to Alignment in this section.
2. Check the wheel bearing end play.
3. Check toe-in and adjust if necessary.

MAJOR FRONT WHEEL ALIGNMENT

Be certain to follow wheel alignment inspection intervals as specified by the original equipment manufacturer. Before performing a major front wheel alignment it is recommended that alignment equipment calibration be checked to ensure proper vehicle alignment.

Major wheel alignment is accomplished in the following sequence of operation:

1. Inspect all the systems that influence the wheel alignment. Refer to the Inspection Prior to Alignment in this section.
2. Check and adjust the maximum turn angle, refer to the Steering Stop Adjustment Procedure in this section, see Figures 8-9 and 8-10.
3. If the vehicle is equipped with power steering, check the pressure relief in the power steering system and reset if necessary. Refer to the vehicle manufacturer regarding the subject: Adjusting the Pressure Relief in the Power Steering System.
4. Check the turning angle (toe-out during vehicle turns or the Ackermann angle). Refer to the vehicle manufacturer or chassis and body manufacturer for specifications.
5. Check the kingpin (or steering axis) inclination. Refer to Kingpin Inclination under the Definitions in this section.
6. Check the camber angle. **DO NOT** attempt to adjust. Refer to Camber Angle under the Definitions in this section.

FIGURE 8-9

FIGURE 8-10

WARNING

AXLE CAMBER IS NOT ADJUSTABLE. DO NOT CHANGE THE AXLE CAMBER ANGLE OR BEND THE AXLE BEAM, SEE FIGURE 8-11. BENDING THE AXLE BEAM TO CHANGE THE CAMBER ANGLE CAN DAMAGE THE AXLE AND REDUCE AXLE STRENGTH, WILL VOID HENDRICKSON'S WARRANTY AND CAN CAUSE LOSS OF VEHICLE CONTROL, POSSIBLY CAUSING PERSONAL INJURY OR PROPERTY DAMAGE.

7. Check and adjust caster angle. Refer to Caster Angle under the Definitions in this section. **The use of two different angle caster shims will not change cross caster.** Cross caster is the difference between the caster readings for left and right side of the vehicle.

SERVICE HINT

Prior to checking caster confirm that the vehicle is at its proper ride height on the rear suspension (if applicable). The rear ride height must be correct to achieve proper caster.

8. Check and adjust toe-in. Refer to adjusting the Toe-In under Definitions in this section.

FIGURE 8-11

Vehicles built after May 2010

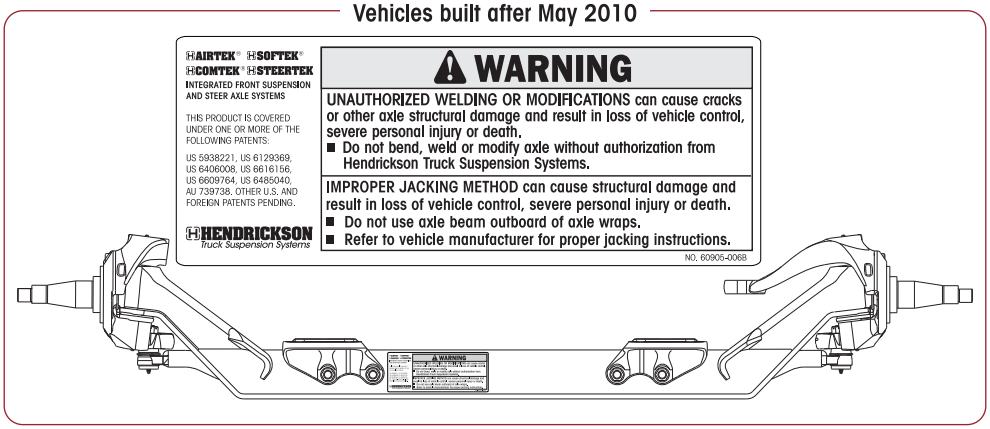

Vehicles built prior to May 2010

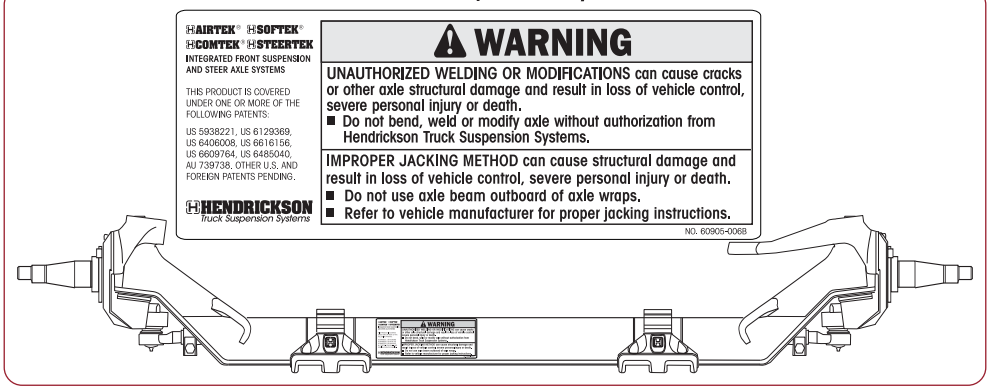

STEERING STOP

ADJUSTMENT PROCEDURE

When the axle or lower steering knuckle is replaced, the steering stop adjustment must be checked.

The steering stop adjustment procedure is as follows:

1. Drive motorhome onto turntables and chock the rear wheels.
2. Measure the wheel cut. The wheel cut is determined by steering the tires. Wheel cut is measured at the inside wheel only, therefore the tires must be turned to the full lock position for each right hand and left hand direction. Refer to the vehicle manufacturer for exact specifications.
3. Increase the wheel cut by loosening the jam nuts and screw the axle stops in clockwise.
4. Tighten the jam nuts.

FIGURE 8-12

NOTE It is very important that the sides of the square head axle stops are set parallel to the axle beam to ensure a good contact point on the axle, see Figure 8-12.

5. Decrease the wheel cut by loosening the jam nuts and screw the axle stops out counterclockwise.
6. Tighten the jam nuts to 40-60 foot pounds.
7. Measure the wheel cut and check for any interference with related steering components.

WARNING ALWAYS CHECK/RESET THE STEERING GEAR BOX POPPET WHEN THE WHEEL CUT IS DECREASED. FOLLOW THE MANUFACTURER'S GUIDELINES FOR THE GEAR BOX POPPET RESETTING PROCEDURE. FAILURE TO DO SO CAN RESULT IN PREMATURE FAILURE OF THE AXLE OR STEERING KNUCKLE. THIS CONDITION CAN CAUSE LOSS OF VEHICLE CONTROL, PERSONAL INJURY OR PROPERTY DAMAGE AND VOID WARRANTY.

TOE SETTING

1. Place the vehicle on a level floor with the wheels in a straight ahead position.
2. Raise the vehicle and support the front axle with jack stands.
3. Use paint and mark the center area of tread on both steer axle tires around the complete outer diameter of the tires.
4. Scribe a line through both steer axle tires in the painted area around the complete outer diameter of the tires.
5. Raise the vehicle and remove the jack stands.
6. Set the vehicle on the ground.

NOTE **DO NOT** measure toe-in with the front axle off the ground. The weight of the vehicle must be on the front axle when toe-in is measured.

7. Use a trammel bar and measure the distance between the scribe marks at the rear of the steer axle tires. Record the measurement.

NOTE When setting up the trammel bar the pointers should be level with the spindles at the front and rear of the steer axle tires.

8. Install the trammel bar and measure the distance between the scribe marks at the front of the steer axle tires. Record the measurement, see Figure 8-13.

FIGURE 8-13

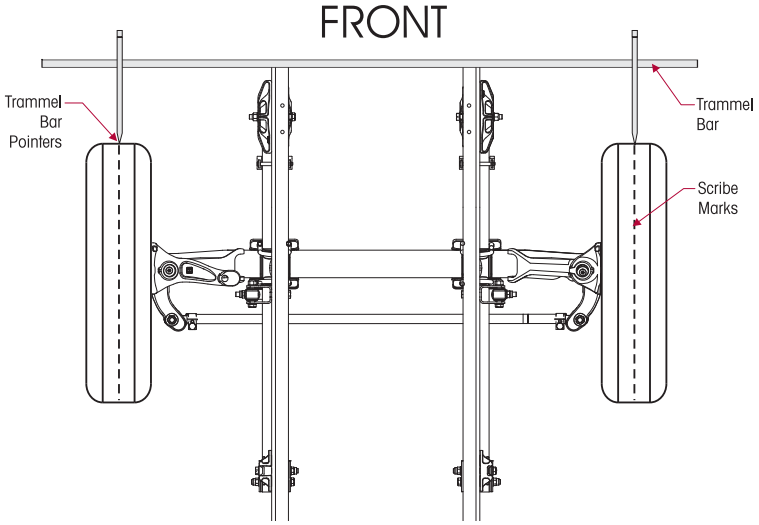

9. To calculate the toe setting subtract the front measurement from the rear measurement, the difference between the two will equal the toe-in/toe-out measurement.
10. If the toe measurement is not within the specifications of 1/16" ± 1/32" (0.060 ± 0.030), it will be necessary to adjust the toe setting. Refer to the following procedure.
    a. Loosen the tie rod cross tube clamp bolts and locknuts.
    b. Turn the tie rod cross tube until the specified toe-in distance is achieved.
    c. Tighten the bolt and locknut on the tie rod cross tube to 60-75 foot pounds torque.

WARNING

THE THREADED PORTION OF THE TIE ROD END MUST EXTEND PAST THE SLOTS INTO THE TIE ROD CROSS TUBE, SEE FIGURE 8-14. FAILURE TO DO SO CAN CAUSE COMPONENT TO FAIL CAUSING LOSS OF VEHICLE CONTROL AND POSSIBLE PERSONAL INJURY OR PROPERTY DAMAGE.

WARNING

IT IS CRITICAL TO CHECK THE 5/8" TIE ROD CLAMP BOLT HEAD LOCATION TO VERIFY THE CLAMP FASTENERS HAVE SUFFICIENT CLEARANCE AWAY FROM THE LOWER SHOCK MOUNT AT FULL WHEEL CUT. THE FASTENERS MUST NOT CONTACT THE LOWER SHOCK MOUNT. FAILURE TO DO SO CAN CAUSE ONE OR MORE COMPONENTS TO FAIL CAUSING LOSS OF VEHICLE CONTROL AND POSSIBLE PERSONAL INJURY OR PROPERTY DAMAGE.

FIGURE 8-14

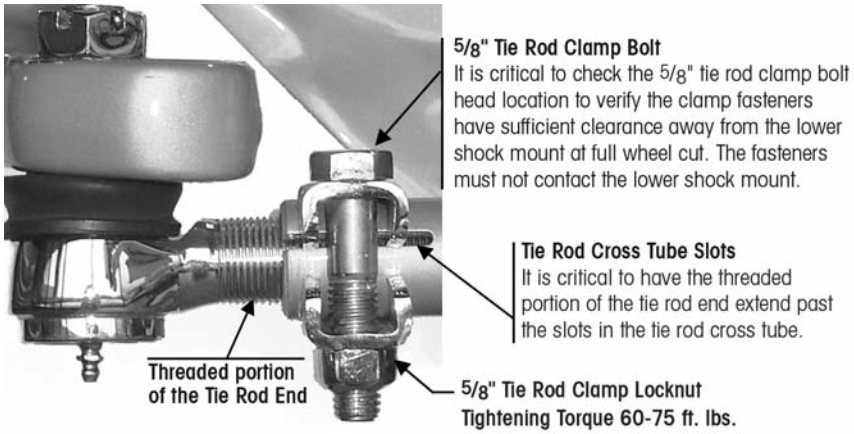

11. Verify the 5/8" tie rod clamp bolt head does not contact the lower shock mount at full wheel cut, see Figure 8-14.
12. Repeat Steps 1-9 until the correct toe setting is achieved.

SPRING EYE RE-TORQUE

This procedure to re-torque is necessary when replacing

- Front hanger
- Shackle assembly
- Steel leaf spring assembly

RE-TORQUE PROCEDURE

1. Chock the rear wheels of the vehicle to prevent movement.
2. Loosen, **DO NOT REMOVE** all six (6), (or eight if equipped) front and rear ¾″ spring eye bolts, see Figure 8-15.

FIGURE 8-15

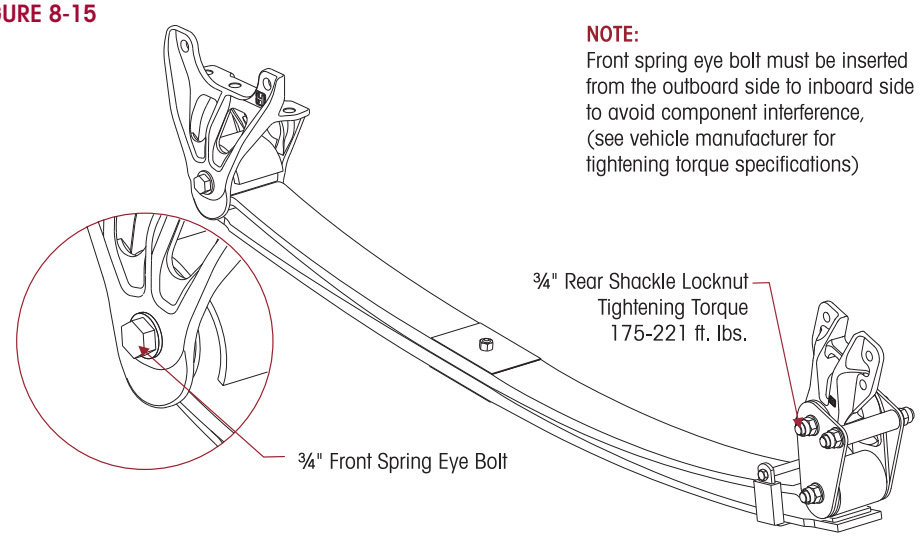

FIGURE 8-16

3. Let the suspension settle.
4. Tighten the front ¾" spring eye bolt locknuts per the vehicle manufacturer's torque specifications.
5. Tighten the rear ¾" spring eye bolt and shackle bolt locknuts to 175-221 foot pounds torque.
6. Affix a straight edge to the bottom of the frame rail behind the frame hanger, see Figure 8-16.
7. With the vehicle on a level surface, measure the distance from the top of the straight edge to the ground on both sides of the vehicle and record the measurements.
8. Measure the difference from one side to the other.
9. Remove wheel chocks and perform a road test.
10. Chock the rear wheels of the vehicle to prevent movement.
11. Repeat the measurement in Steps 6 through 8.
12. If the difference in measurement from one side to the other is less than ½", the vehicle is level. If measurement difference is more than ½" contact the vehicle manufacturer.
13. Remove the wheel chocks.

SECTION 9
Component Replacement

FASTENERS

Hendrickson recommends that when servicing the vehicle to replace the removed fasteners with new equivalent fasteners for SOFTEK and STEERTEK components. Maintain correct torque values at all times. Check torque values as specified. See Hendrickson's recommended torques in Torque Specifications Section of this publication. If non-Hendrickson fasteners are used follow torque specifications listed in the vehicle manufacturer's service manual.

SHOCK ABSORBER

NOTE This component is not supplied by Hendrickson. Hendrickson is not responsible for components supplied by the vehicle manufacturer. For assistance with maintenance and rebuild instructions on this component, see the vehicle manufacturer.

It is not necessary to replace the shock absorber in pairs if only one shock requires replacement.

DISASSEMBLY

1. Remove the lower mounting bolts, fasteners, and spacer.
2. Remove the upper mounting bolts and fasteners.
3. Slide out the shock absorber.
4. Inspect the shock absorber mounting brackets and hardware for damage or wear, replace as necessary.

FIGURE 9-1

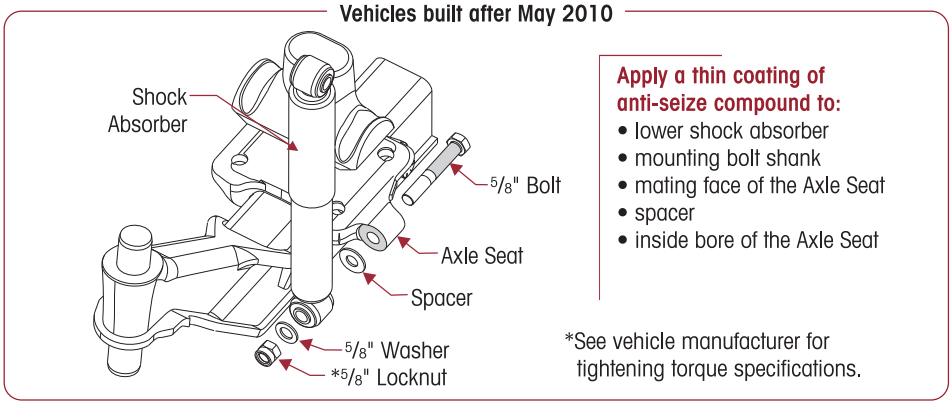

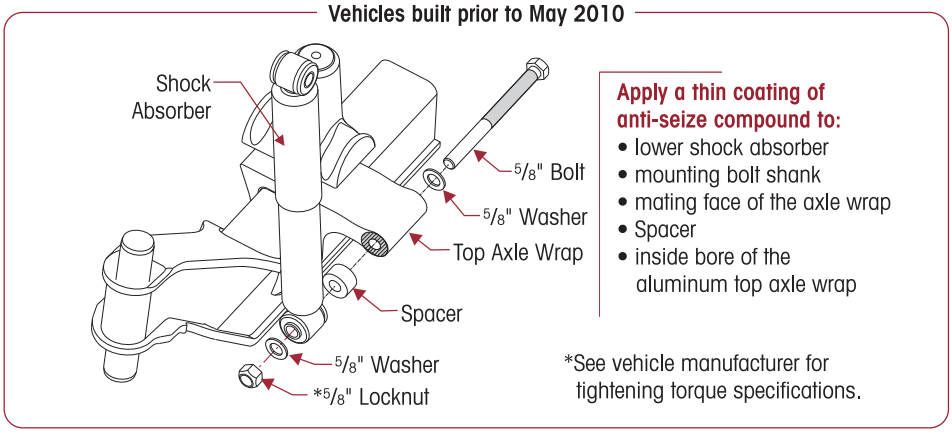

ASSEMBLY

1. Install the shock absorber into the upper mounting bracket.
2. Install the upper shock mounting bolt, washers and locknut.
3. ■ **Vehicles built after May 2010:**
   a. Apply a thin coating of anti-seize compound to the shock absorber lower mounting bolt shank, to the mating face of the axle seat and spacer, and to the inside bore of the axle seat. This is necessary to help prevent seizing of the bolt to the axle seat.
   b. Install the lower bolt from the inboard side to the outboard side of the axle seat and attach the spacer, washer, and locknut, see Figure 9-1.

   ■ **Vehicles built prior to May 2010:**
   a. Apply a thin coating of anti-seize compound to the shock absorber lower mounting bolt shank, to the mating face of the axle wrap and spacer, and to the inside bore of the aluminum axle wrap. This is necessary to help prevent seizing of the bolt to the aluminum axle wrap.
   b. Install the lower bolt from the inboard side to the outboard side of the top axle wrap and attach the spacer, washer, and locknut, see Figure 9-1.
4. Tighten upper and lower shock eye locknuts per vehicle manufacturer's torque specifications.

FRONT LEAF SPRING FRAME HANGER

DISASSEMBLY

1. Raise the frame.
2. Support the frame with frame stands.
3. Suspend the front axle from the shocks.
4. Remove the ¾" spring eye bolt, washers and locknut.

SERVICE HINT A bottle jack may be required to raise the axle slightly to facilitate removal of the spring eye bolt.

5. Remove the frame mounting fasteners from the front hanger per the vehicle manufacturer's guidelines.
6. Remove the front hanger from the vehicle, see Figure 9-2.

FIGURE 9-2

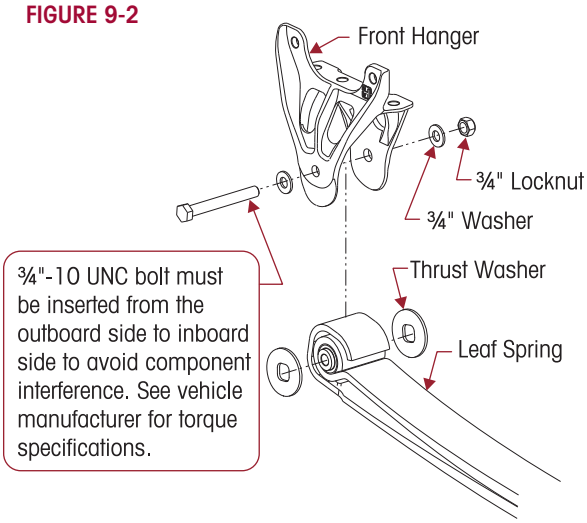

ASSEMBLY

1. Install the new front hanger on the frame.
2. Install new frame fasteners per the vehicle manufacturer's guidelines.
3. Install the new ¾" spring eye bolt from the outboard side of the hanger and attach fasteners, see Figure 9-2.
4. Remove the frame stands and lower the frame.
5. Tighten the fasteners per the vehicle manufacturer's torque specifications.

REAR SHACKLE FRAME BRACKET

DISASSEMBLY

1. Raise the frame.
2. Support the frame with frame stands.
3. Suspend the front axle from the shocks.
4. Remove the rear ¾" spring eye and shackle pivot bolts, washers and locknuts.

SERVICE HINT A bottle jack may be required to raise the axle slightly to facilitate removal of the spring eye bolt.

5 Remove the frame fasteners from the shackle bracket. See manufacturer's guidelines.

6. Remove the shackle bracket from the vehicle, see Figure 9-3.

FIGURE 9-3

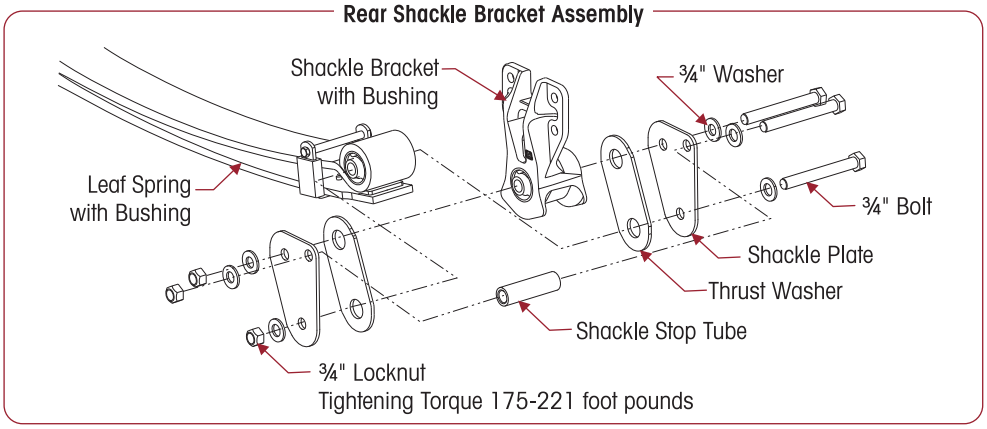

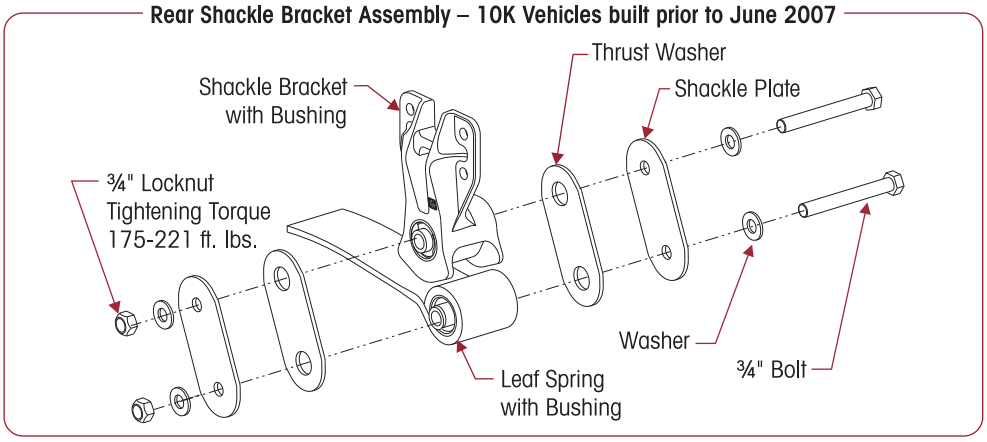

7. Inspect the shackle assembly and both thrust washers for excessive wear or damage. See Thrust Washer Inspection in the Preventive Maintenance Section of this publication. Hendrickson recommends the thrust washers be replaced when this assembly is serviced.
8. If damaged or worn excessively, replace with Genuine Hendrickson parts as detailed in this section.

ASSEMBLY

1. Install the shackle bracket on the frame.
2. Install the new frame fasteners per the vehicle manufacturer's guidelines.
3. Install the thrust washers and shackle plates with the ¾" bolts and fasteners, see Figure 9-3.
4. Remove the frame stands and lower the frame.
5. Tighten the ¾" locknuts to 175-221 foot pounds torque.

LEAF SPRING (Vehicles built after May 2010)

DISASSEMBLY

1. Place the vehicle on a level floor.
2. Chock the wheels.
3. Raise the vehicle.
4. Support the frame with frame stands.
5. Suspend the front axle to remove the load from leaf spring assembly.
6. Remove the front and rear ¾" spring eye bolts washer and locknuts. Loosen the ¾" shackle pivot bolt.

SERVICE HINT To ease in the removal of the spring eye bolts, it may be necessary to raise the axle slightly.

7. Remove the ¾" clamp group U-bolts, washers and locknuts. Discard the fasteners.

WARNING DO NOT USE A CUTTING TORCH TO REMOVE CLAMP GROUP BOLTS OR ATTACHING FASTENERS. THE USE OF SUCH HEAT ON SUSPENSION COMPONENTS CAN ADVERSELY AFFECT THE STRENGTH OF THESE PARTS. A COMPONENT DAMAGED IN THIS MANNER CAN RESULT IN THE LOSS OF VEHICLE CONTROL AND POSSIBLE PERSONAL INJURY OR PROPERTY DAMAGE.

SERVICE HINT If a clamp group nut fails to come off bolt, cut half way through the bolt with an abrasive cut off wheel, taking care not to contact axle beam or other components. Using an impact wrench, spin the locknut to fracture the bolt and remove.

8. Remove the top pad, galvanized liner, and the sway bar bracket, see Figure 9-4.
9. Remove the leaf spring assembly.

FIGURE 9-4 Vehicles built after May 2010

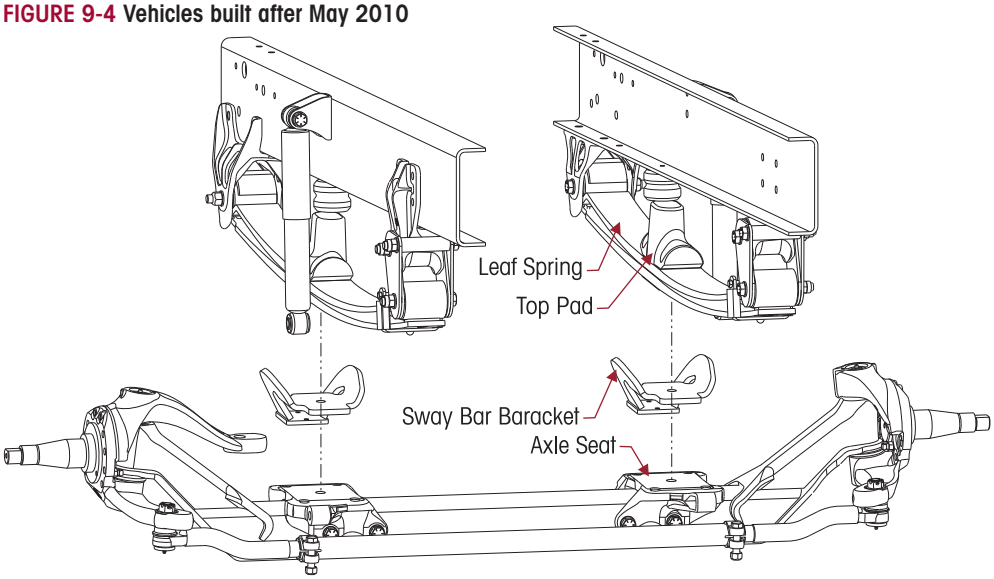

ASSEMBLY

1. Install sway bar bracket.
2. Install the new leaf assembly on the axle. Verify that the center bolt is located properly in the axle seat and sway bar bracket, see Figure 9-4.
3. Install the new galvanized liner and the top pad with the raised lettering "OUT" facing outboard side on the spring, see Figure 9-5 .

FIGURE 9-5

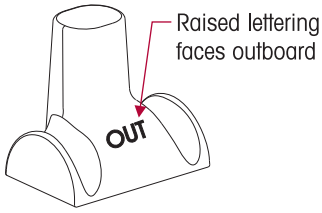

FIGURE 9-6

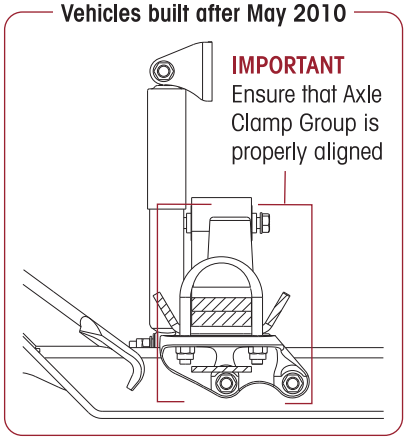

4. Install the new ¾" clamp group U-bolts, washers, and locknuts. The locknuts must be replaced when the clamp group is removed, to prevent premature bolt fatigue.
5. Snug the clamp group, **DO NOT** torque at this time.
6. Raise the axle and the leaf spring assembly into the front hanger and rear shackle assembly.
7. Install the ¾" spring eye bolts, washers and locknuts. Snug bolts. **DO NOT** tighten. Front spring eye bolts are inserted from the outboard side to the inboard side to avoid component interference.
8. Ensure that the clamp group is properly aligned and the U-bolts are seated in the top pad, and the sway bar bracket is centered on the axle seat, see Figure 9-6.

FIGURE 9-7

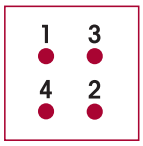

9. Tighten the clamp group locknuts evenly in 50 foot pounds increments to vehicle manufacturer's torque specifications in the proper pattern to achieve uniform bolt tension, see Figure 9-7.
10. Remove the frame supports and load the front axle with the vehicle weight.
11. Tighten the front ¾" spring eye bolt locknuts to the vehicle manufacturer's torque specifications.
12. Remove the wheel chocks.

LEAF SPRING (Vehicles built prior to May 2010)

DISASSEMBLY

1. Place the vehicle on a level floor.
2. Chock the wheels.
3. Raise the vehicle.
4. Support the frame with frame stands.
5. Suspend the front axle to remove the load from leaf spring assembly.
6. Remove the front and rear ¾" spring eye bolts washer and locknuts. Loosen the ¾" shackle pivot bolt.

SERVICE HINT

To ease in the removal of the spring eye bolts, it may be necessary to raise the axle slightly.

7. Remove the ¾" clamp group U-bolts, washers and locknuts. Discard the fasteners.

WARNING

DO NOT USE A CUTTING TORCH TO REMOVE CLAMP GROUP BOLTS OR ATTACHING FASTENERS. THE USE OF SUCH HEAT ON SUSPENSION COMPONENTS CAN ADVERSELY AFFECT THE STRENGTH OF THESE PARTS. A COMPONENT DAMAGED IN THIS MANNER CAN RESULT IN THE LOSS OF VEHICLE CONTROL AND POSSIBLE PERSONAL INJURY OR PROPERTY DAMAGE.

SERVICE HINT

If a clamp group nut fails to come off bolt, cut half way through the bolt with an abrasive cut off wheel, taking care not to contact axle beam or other components. Using an impact wrench, spin the locknut to fracture the bolt and remove.

8. Remove the top pad, galvanized liner, sway bar bracket and the bottom axle wrap, see Figure 9-4.
9. Remove the spring assembly.

FIGURE 9-4 Vehicles built prior to May 2010

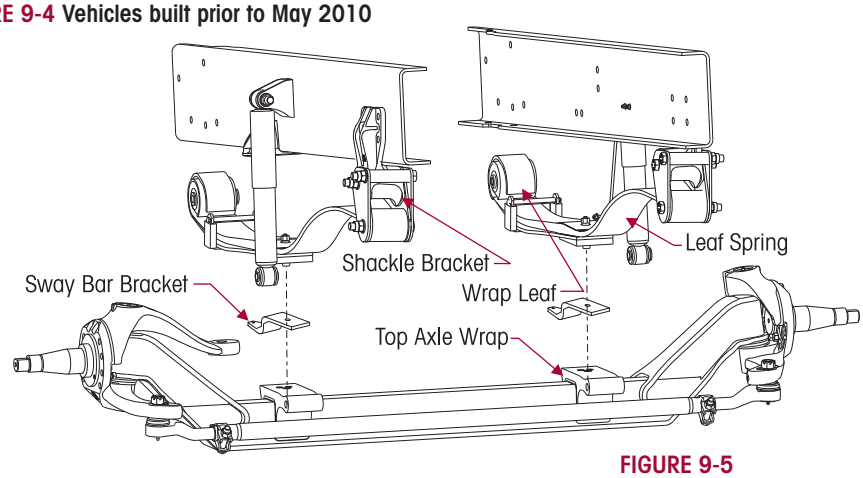

FIGURE 9-5

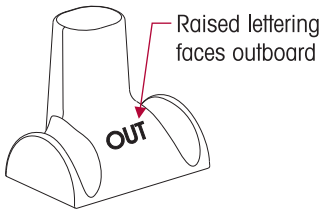

ASSEMBLY

1. Install sway bar bracket.
2. Install the new spring and wrap leaf assembly on the axle. Verify that the center bolt is located properly in the top axle wrap and spacer, see Figure 9-4.
3. Install the new galvanized liner and the top pad with the raised lettering "OUT" facing outboard side on the spring, see Figure 9-5.
4. Remove and replace the bottom axle wrap liner located in bottom axle wrap.
5. Install the bottom axle wrap.

FIGURE 9-6

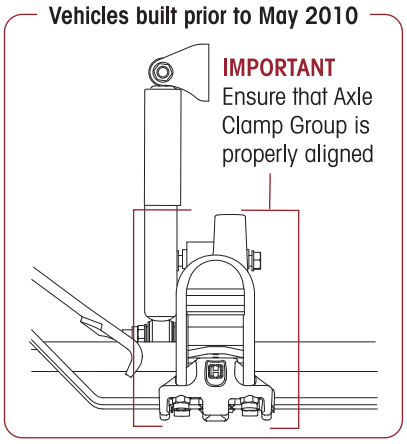

6. Install the new ¾" clamp group U-bolts, washers, and locknuts. The locknuts must be replaced when the clamp group is removed, to prevent premature bolt fatigue.
7. Snug the clamp group, **DO NOT** torque at this time.
8. Raise the axle and the spring and wrap leaf assembly into the front hanger and rear shackle assembly.
9. Install the ¾" spring eye bolts, washers and locknuts. Snug bolts. **DO NOT** tighten. Front spring eye bolts are inserted from the outboard side to the inboard side to avoid component interference.
10. Ensure that the clamp group is properly aligned and the U-bolts are seated in the top pad, and the bottom axle wrap is centered with the top axle wrap, see Figure 9-6.

FIGURE 9-7

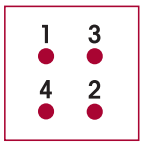

11. Tighten the clamp group locknuts evenly in 50 foot pounds increments to vehicle manufacturer's torque specifications in the proper pattern to achieve uniform bolt tension, see Figure 9-7.
12. Remove the frame supports and load the front axle with the vehicle weight.
13. Tighten the front ¾" spring eye bolt locknuts to the vehicle manufacturer's torque specifications.
14. Remove the wheel chocks.

SPRING EYE BUSHINGS

The spring eye bushings for the SOFTEK leaf spring and wrap leaf assemblies are designed to provide extended service life. If premature wear to the bushing occurs, careful consideration must be given to the contributing factor that caused the wear. Such factors must be corrected in order to prevent the new bushing from sustaining similar premature/excessive wear or damage in the same manner. The front and rear bushings are permanently installed in the spring leaf and are not serviceable. In the event of premature/excessive wear or damage, Hendrickson requires that the front leaf spring assembly be replaced. Follow the procedure for the Front Leaf Spring assembly in this section.

BOTTOM AXLE WRAP (If equipped) Vehicles built prior to May 2010

DISASSEMBLY

1. Chock the wheels
2. Support the frame with frame stands.

WARNING

DO NOT USE A CUTTING TORCH TO REMOVE CLAMP GROUP BOLTS OR ATTACHING FASTENERS. THE USE OF SUCH HEAT ON SUSPENSION COMPONENTS CAN ADVERSELY AFFECT THE STRENGTH OF THESE PARTS. A COMPONENT DAMAGED IN THIS MANNER CAN RESULT IN THE LOSS OF VEHICLE CONTROL AND POSSIBLE PERSONAL INJURY OR PROPERTY DAMAGE.

SERVICE HINT

If a clamp group nut fails to come off bolt, cut half way through the bolt with an abrasive cut off wheel, taking care not to contact axle beam or other components. Using an impact wrench, spin the locknut to fracture the bolt and remove.

3. Remove the ¾" U-bolts, washers and locknuts. Discard fasteners.
4. Remove the bottom axle wrap. It may be necessary to use a dead blow mallet to dislodge axle wrap.
5. Once removed inspect the axle wrap for damage. Replace if necessary.
6. Discard the used bottom axle wrap liner.

ASSEMBLY

WARNING

DO NOT ASSEMBLE CLAMP GROUP WITHOUT AXLE WRAP LINERS. FAILURE TO DO SO CAN CAUSE LOSS OF VEHICLE CONTROL, PROPERTY DAMAGE OR PERSONAL INJURY.

1. Install the new bottom axle wrap liner into bottom axle wrap.
2. Install the bottom axle wrap on axle.
3. Install new ¾" U-bolts, washers and locknuts. Ensure that the clamp group is properly aligned, the U-bolts are seated in the top pad, and the bottom axle wrap is centered with the top axle wrap, see Figure 9-8.

FIGURE 9-8

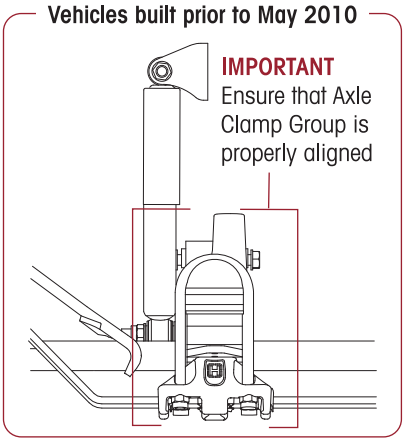

FIGURE 9-9

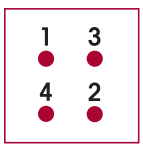

4. Tighten locknuts evenly in 50 foot pounds increments to vehicle manufacturer's specifications in proper pattern to achieve uniform bolt tension, see Figure 9-9.
5. Remove frame stands and lower vehicle.
6. Remove the wheel chocks.

TOP AXLE WRAP IN CHASSIS (If equipped) Vehicles built prior to May 2010

DISASSEMBLY

1. Chock the wheels
2. Raise the vehicle and suspend the front axle to remove the load from the leaf spring and wrap leaf assembly.
3. Support the frame with frame stands.
4. Remove the front and rear ¾" spring eye bolts, washers and locknuts. Loosen the ¾" shackle pivot bolt.

SERVICE HINT A bottle jack may be required to raise the axle slightly in order to remove spring eye bolts.

5. Support the axle with a jack.

WARNING DO NOT USE A CUTTING TORCH TO REMOVE CLAMP GROUP BOLTS OR ATTACHING FASTENERS. THE USE OF SUCH HEAT ON SUSPENSION COMPONENTS CAN ADVERSELY AFFECT THE STRENGTH OF THESE PARTS. A COMPONENT DAMAGED IN THIS MANNER CAN RESULT IN THE LOSS OF VEHICLE CONTROL AND POSSIBLE PERSONAL INJURY OR PROPERTY DAMAGE.

SERVICE HINT If a clamp group nut fails to come off bolt, cut half way through the bolt with an abrasive cut off wheel, taking care not to contact axle beam or other components. Using an impact wrench, spin the locknut to fracture the bolt and remove.

6. Remove the ¾" clamp group U-bolts, washers and locknuts. Discard fasteners.
7. Remove the top pad and the bottom axle wrap.
8. Remove the lower shock mounting bolt.
9. Remove the sway bar bracket, leaf spring and wrap leaf assembly.

CAUTION DO NOT STRIKE THE TOP AXLE WRAP DIRECTLY WITH A HAMMER. HENDRICKSON RECOMMENDS USING A PLASTIC DEAD BLOW MALLET WITH CARE WHEN INSTALLING THE AXLE WRAP.

10. Strike the axle wrap with a dead blow mallet at the front and rear on the underside of the axle wrap to dislodge it from the axle, see Figure 9-10.
11. Clean and inspect the axle wrap and axle wrap liners for cracks or damage, replace each if cracks or damage are present.

FIGURE 9-10

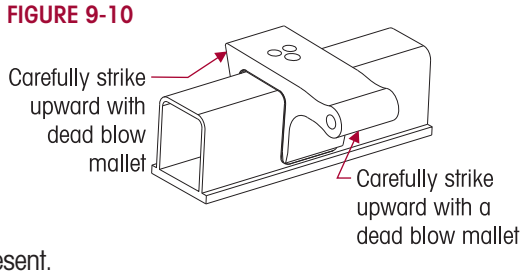

ASSEMBLY

1. Install the new axle wrap liner on the axle.
2. Spray the axle wrap liner and the axle wrap with a silicon lubricant.
3. Position the top axle wrap on the axle, see Figure 9-11.
4. Protect the top surface of the axle wrap with a block of wood, cardboard, or shop towels.

CAUTION DO NOT STRIKE THE TOP AXLE WRAP DIRECTLY WITH A HAMMER. HENDRICKSON RECOMMENDS USING A PLASTIC DEAD BLOW MALLET WITH CARE WHEN INSTALLING THE AXLE WRAP.

5. Make sure the axle wrap bore indexes the locating axle wrap guide pin and is fully seated on the axle.

FIGURE 9-11

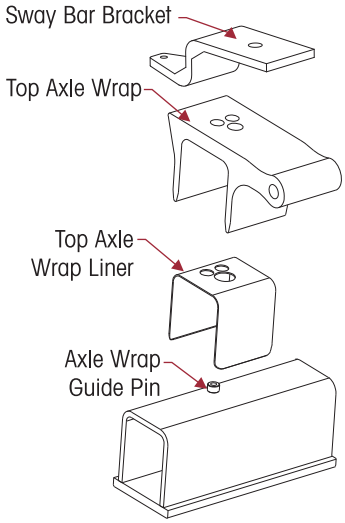

FIGURE 9-12

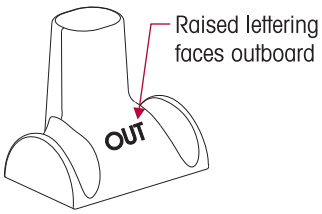

6. Install the leaf spring assembly on the top axle wrap indexing the center bolt thru the sway bar bracket into the locating hole.
7. Install the top pad with the raised lettering "OUT" facing outboard side on the spring and wrap leaf assembly, see Figure 9-12.
8. Remove and replace the bottom axle wrap liner.
9. Install the bottom axle wrap.
10. Install the new ¾" clamp group U-bolts, washers, and locknuts.
11. Snug the clamp group, **DO NOT** torque at this time.
12. Use a jack and raise the axle and spring assembly into the front spring hanger and shackle assembly.

SERVICE HINT

A bottle jack may be required to raise the axle slightly in order to install the spring eye bolts.

13. Install the ¾" spring eye bolts, washer and locknuts in the front spring hanger and rear shackle assembly.
14. Ensure that the clamp group is properly aligned and the U-bolts are seated in the top pad, and the bottom axle wrap is centered with the top axle wrap, see Figure 9-13.

FIGURE 9-13

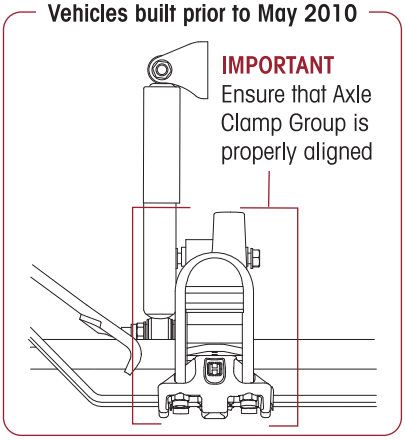

FIGURE 9-14

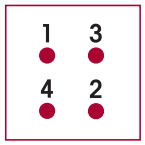

15. Tighten the ¾" clamp group locknuts evenly in 50 foot pounds increments per vehicle manufacturer's torque specifications in the proper pattern to achieve uniform bolt tension, see Figure 9-14.
16. Apply a thin coating of anti-seize to the lower shock mounting bolt, see Figure 9-15.
17. Install the ⅝" lower shock bolt to the top axle wrap (oriented from the inboard side to the outboard side), washer, and locknut, see Figure 9-15.

FIGURE 9-15

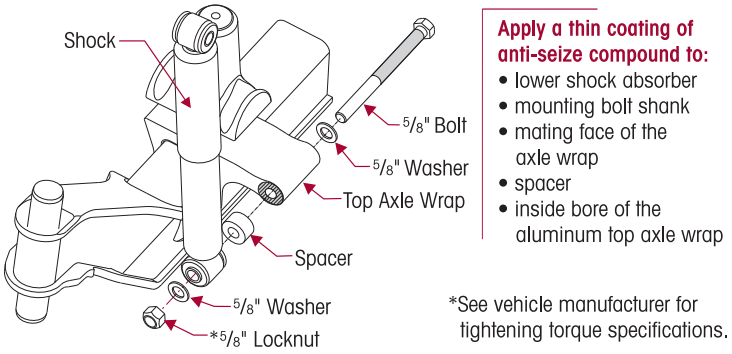

18. Tighten the ⅝" locknut per vehicle manufacturer's torque specifications.
19. Remove the jack from the axle.
20. Remove the frame stands.
21. Tighten the ¾" spring eye bolt locknuts per vehicle manufacturer's torque specifications.
22. Remove wheel chocks.

FRONT AXLE ASSEMBLY (Vehicles built after May 2010)

The axle clamp group consist of a top pad, ¾" U-bolts, washers, and nylon locknuts

FIGURE 9-16 Vehicles built after May 2010

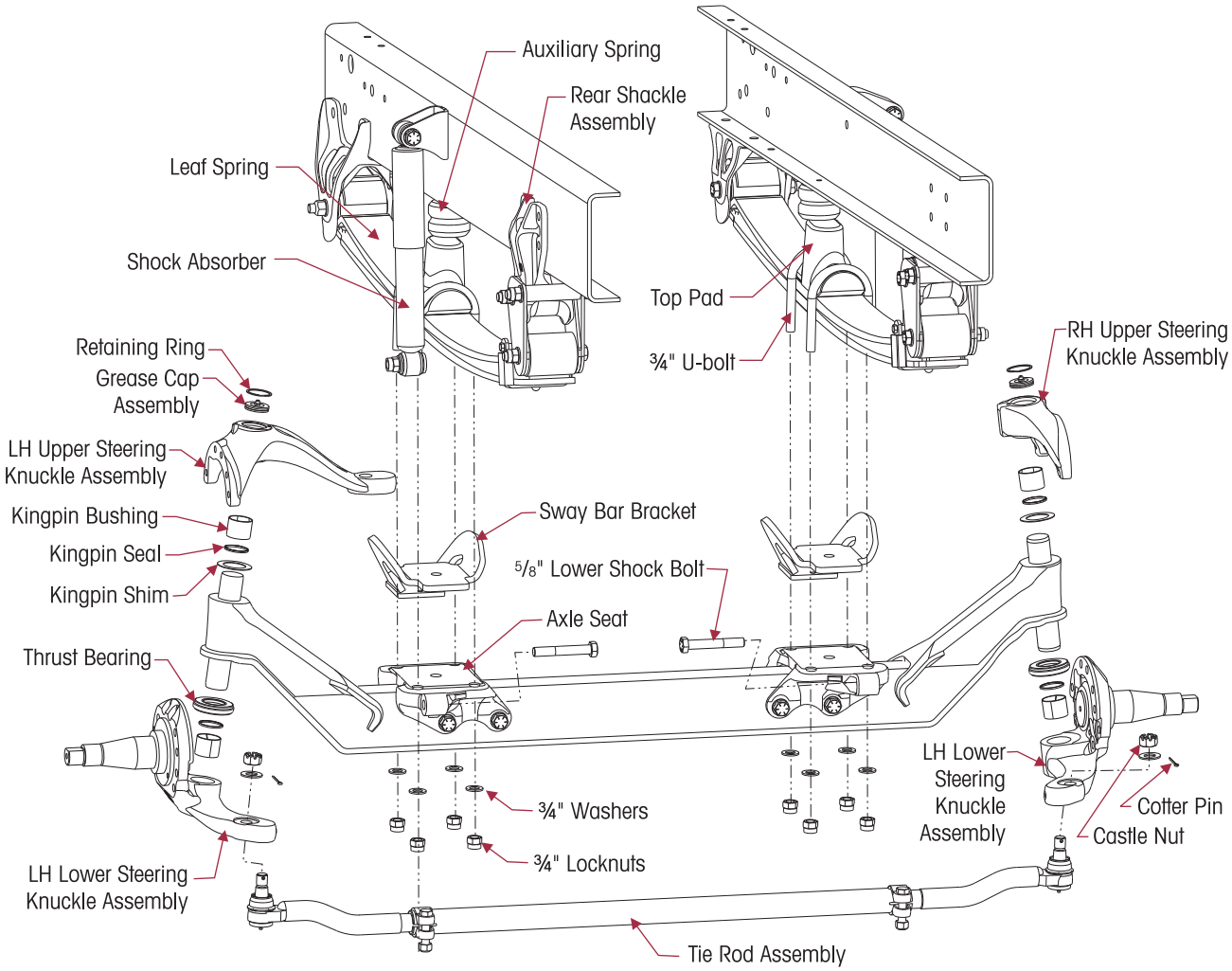

STEERTEK AXLE REMOVAL (Vehicles built after May 2010)

AXLE DISASSEMBLY

Refer to Figure 9-16 when replacing the components of the STEERTEK axle as shown.

WARNING

DO NOT USE A TORCH ON CLAMP GROUP BOLTS OR ANY OTHER PART OF THE SOFTEK SUSPENSION. IF THE CLAMP GROUP BOLTS WILL NOT COME LOOSE WITH AN IMPACT WRENCH, USE A CUT OFF WHEEL AND CUT THE SHANK OF THE BOLT. THE USE OF A TORCH CAN CAUSE DAMAGE TO CERTAIN SOFTEK COMPONENTS THAT CAN RESULT IN THE LOSS OF VEHICLE CONTROL AND POSSIBLE PERSONAL INJURY OR PROPERTY DAMAGE.

1. Raise the vehicle.
2. Support the frame and suspend the front axle with the shocks attached.
3. Remove the front wheels, hubs, brake shoes, ABS sensors, and backing plate assembly.
4. Disconnect the drag link from the steering arm.
5. Support the axle with a floor jack.

WARNING

THE REPAIR OR RECONDITIONING OF SUSPENSION OR AXLE COMPONENTS IS NOT ALLOWED. HENDRICKSON ADVISES REPLACING ALL COMPONENTS FOUND TO BE DAMAGED OR OUT OF SPECIFICATIONS. ALL MAJOR HENDRICKSON COMPONENTS ARE HEAT TREATED AND TEMPERED. SOFTEK COMPONENTS CANNOT BE BENT, WELDED, HEATED, OR REPAIRED WITHOUT REDUCING THE STRENGTH OR LIFE OF THE COMPONENT. FAILURE TO FOLLOW THESE GUIDELINES CAN CAUSE LOSS OF VEHICLE CONTROL, AND POSSIBLE PERSONAL INJURY OR DEATH OR PROPERTY DAMAGE AND WILL VOID APPLICABLE WARRANTIES.

6. Disconnect and remove the lower shock mounting bolts.
7. Remove the clamp group U-bolts and fasteners.
8. Lower the axle and remove from the vehicle.

STEERTEK AXLE (Removed from Chassis)

CLAMP GROUP DISASSEMBLY

1. Remove sway bar bracket.
2. Remove the tie rod assembly, refer to the Tie Rod Disassembly in this section.

WARNING

REMOVAL OF THE CAP SCREWS WILL ALLOW THE STEERING KNUCKLE TO SEPARATE FROM THE AXLE. THE STEERING KNUCKLE MUST BE SUPPORTED BEFORE REMOVAL OF THESE TWO (2) CAP SCREWS. FAILURE TO DO SO CAN CAUSE COMPONENT DAMAGE OR PERSONAL INJURY.

3. Remove the two 5/8" socket head cap screws from the steering knuckle assembly.
4. Remove the steering knuckle, thrust bearing, and shim pack if equipped.
5. After complete removal of the one side, repeat Steps 1-5 for the opposite side of the axle.
6. Inspect the steering kingpin bushings for excessive wear. If worn, replace the kingpin bushings and seals. See Kingpin Bushing replacement instructions in this section.

AXLE ASSEMBLY

1. Place the new axle on the floor jack and position the axle under the vehicle.
2. Raise the axle into position. Care must be taken at this point to ensure that the leaf spring bolt aligns with the axle seat, see Figure 9-17.

FIGURE 9-17 Vehicles built after May 21010

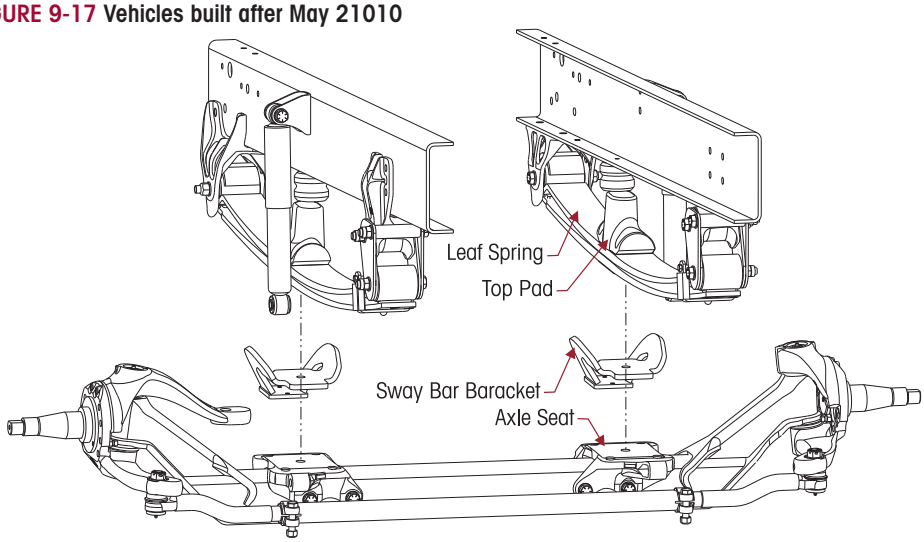

3. Slide the sway bar bracket over the axle seat, verify that the dowel pin holes align correctly with the dowel pin on the leaf spring and wrap leaf assembly.
4. Completely raise the axle, fully engaging the leaf spring assembly into the axle seat and sway bar bracket.

FIGURE 9-18

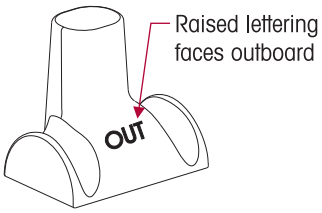

5. Install the top pad with the raised lettering "OUT" facing outboard side on the spring and wrap leaf assembly, see Figure 9-18.
6. Install the new ¾" clamp group U-bolts, washers and locknuts. Snug the bolts, **DO NOT** tighten to torque at this time.
7. Install the shock absorbers on ⅝" lower shock mounting bolts. Install the washers and locknuts and tighten per vehicle manufacturer's torque specifications.

WARNING

ENSURE CLAMP GROUP IS ALIGNED PROPERLY PRIOR TO TIGHTENING HARDWARE. FAILURE TO DO SO CAN CAUSE LOSS OF VEHICLE CONTROL, PROPERTY DAMAGE OR PERSONAL INJURY.

FIGURE 9-19

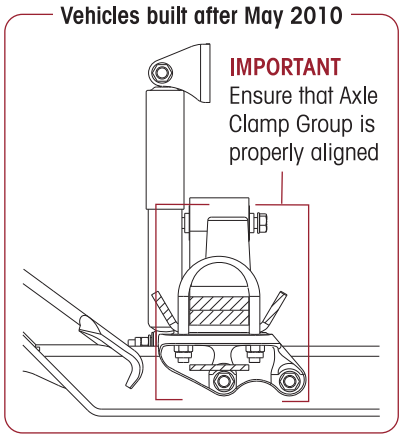

8. Ensure that the clamp groups are properly aligned and the U-bolts are seated in the top pad, and the sway bar brackets are centered on the axle seat, see Figure 9-19.

FIGURE 9-20

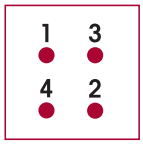

9. Tighten the ¾" clamp group locknuts evenly in 50 foot pounds increments per vehicle manufacturer's torque specifications in the proper pattern to achieve uniform bolt tension, see Figure 9-20.
10. Install the steering knuckles as per the Steering Knuckle replacement instructions in this section.
11. Install the tie rod tube.
12. Install the ⅞" hardened washers on the Ackermann arm and the castle nuts. Tighten the castle nuts to 185 foot pounds, then rotate until the first castle slot lines up with the cotter pin bore in the tie rod end. **DO NOT** back off nut for cotter pin installation.
13. Install the tie rod end cotter pins.
14. Connect the drag link. Install the castle nut to install the steering arm. Tighten the castle nut to 185 foot pounds, then rotate until the first castle slot lines up with the cotter pin bore in the drag link. **DO NOT** back off nut for cotter pin installation.
15. Install the drag link cotter pin.
16. Install the brake backing plate assemblies per the manufacturer's guidelines.
17. Install the brakes, hubs, and wheels as per manufacturer's guidelines.
18. Fill the hubs with the proper lube per the manufacturer's guidelines for recommended lubrication.
19. Grease the front steering components as per lubrication guidelines in the Preventive Maintenance Section of this publication.

FRONT AXLE ASSEMBLY (Vehicles built prior to May 2010)

AXLE CLAMP GROUP consist of the following components:

- Top Axle Wrap
- Top Axle Wrap Liner
- Top Pad
- Bottom Axle Wrap
- Bottom Axle Wrap Liner
- ¾" U-bolts, washers and nylon locknuts

FIGURE 9-21

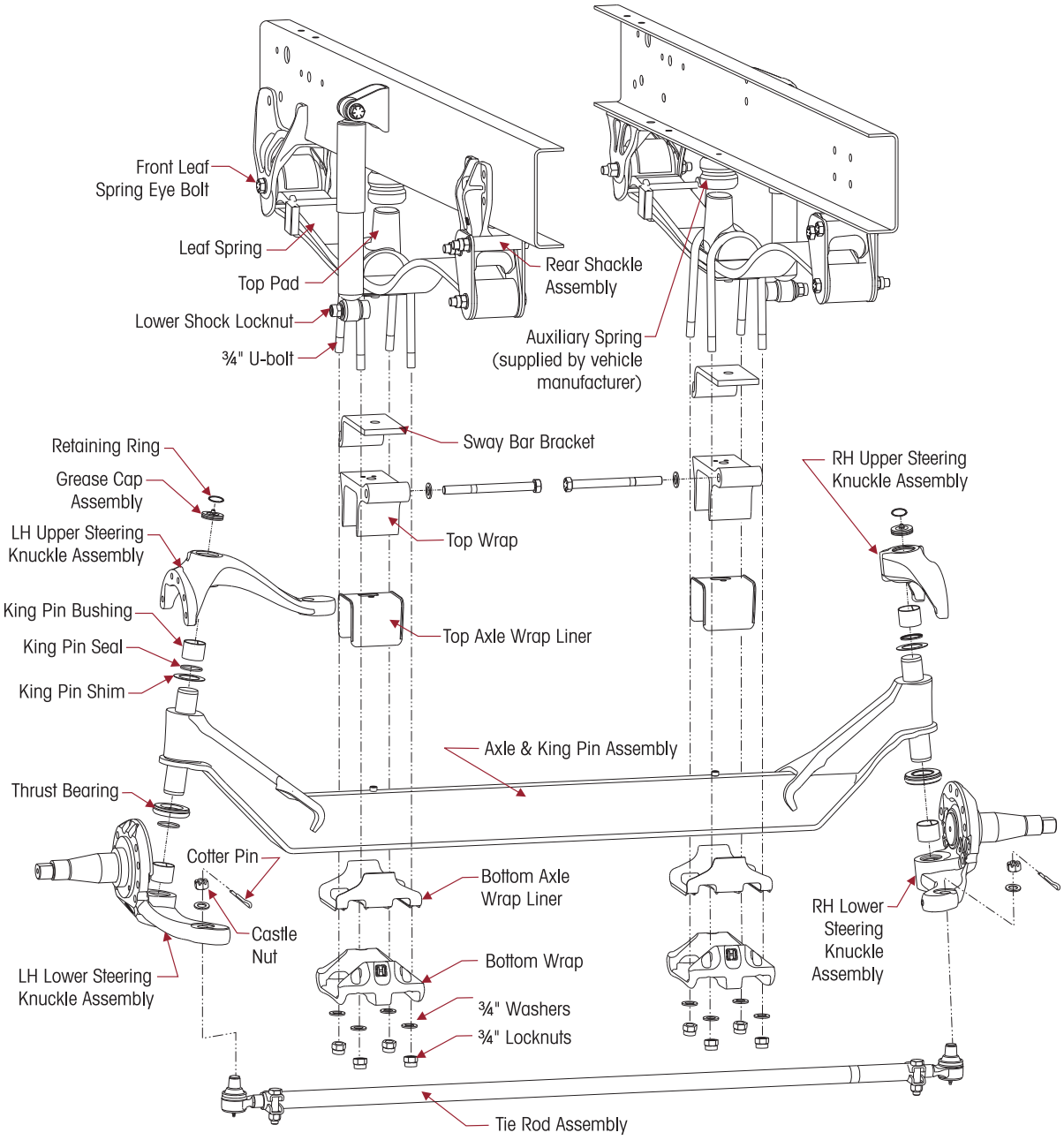

STEERTEK AXLE REMOVAL (Vehicles built prior to May 2010)

AXLE DISASSEMBLY

Refer to Figure 9-21 when replacing the components of the STEERTEK axle as shown.

WARNING

DO NOT USE A TORCH ON CLAMP GROUP BOLTS OR ANY OTHER PART OF THE SOFTEK SUSPENSION. IF THE CLAMP GROUP BOLTS WILL NOT COME LOOSE WITH AN IMPACT WRENCH, USE A CUT OFF WHEEL AND CUT THE SHANK OF THE BOLT. THE USE OF A TORCH CAN CAUSE DAMAGE TO CERTAIN SOFTEK COMPONENTS THAT CAN RESULT IN THE LOSS OF VEHICLE CONTROL AND POSSIBLE PERSONAL INJURY OR PROPERTY DAMAGE.

1. Raise the vehicle.
2. Support the frame and suspend the front axle with the shocks attached.
3. Remove the front wheels, hubs, brake shoes, ABS sensors, and backing plate assembly.
4. Disconnect the drag link from the steering arm.
5. Support the axle.

WARNING

THE REPAIR OR RECONDITIONING OF SUSPENSION OR AXLE COMPONENTS IS NOT ALLOWED. HENDRICKSON ADVISES REPLACING ALL COMPONENTS FOUND TO BE DAMAGED OR OUT OF SPECIFICATIONS. ALL MAJOR HENDRICKSON COMPONENTS ARE HEAT TREATED AND TEMPERED. SOFTEK COMPONENTS CANNOT BE BENT, WELDED, HEATED, OR REPAIRED WITHOUT REDUCING THE STRENGTH OR LIFE OF THE COMPONENT. FAILURE TO FOLLOW THESE GUIDELINES CAN CAUSE LOSS OF VEHICLE CONTROL, AND POSSIBLE PERSONAL INJURY OR DEATH OR PROPERTY DAMAGE AND WILL VOID APPLICABLE WARRANTIES.

6. Disconnect and remove the lower shock mounting bolts.
7. Remove the ¾" clamp group bolts and fasteners.
8. Lower the axle and remove from the vehicle.

STEERTEK AXLE (Removed from Chassis)

CLAMP GROUP DISASSEMBLY

1. Remove the bottom axle wrap and liner from the axle.
2. Remove sway bar bracket.
3. Strike the top axle wrap with a dead blow mallet at the front and rear on the underside of the axle wrap to dislodge it from the axle, see Figure 9-22.
4. After removal of the top axle wrap from the axle inspect for cracks or fretting.

FIGURE 9-22

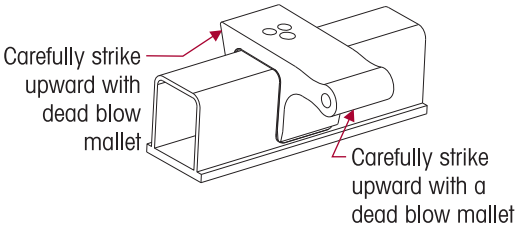

5. Remove the tie rod assembly, refer to the Tie Rod Disassembly in this section.

WARNING

REMOVAL OF THE CAP SCREWS WILL ALLOW THE STEERING KNUCKLE TO SEPARATE FROM THE AXLE. THE STEERING KNUCKLE MUST BE SUPPORTED BEFORE REMOVAL OF THESE TWO (2) CAP SCREWS. FAILURE TO DO SO CAN CAUSE COMPONENT DAMAGE OR PERSONAL INJURY.

6. Remove the two ⅝" socket head cap screws from the steering knuckle assembly.
7. Remove the steering knuckle, thrust bearing, and shim pack if equipped.
8. After complete removal of the one side, repeat Steps 1-5 for the opposite side of the axle.

9. Inspect the steering kingpin bushings for excessive wear. If worn, replace the kingpin bushings and seals. See Kingpin Bushing replacement instructions in this section.

FIGURE 9-23

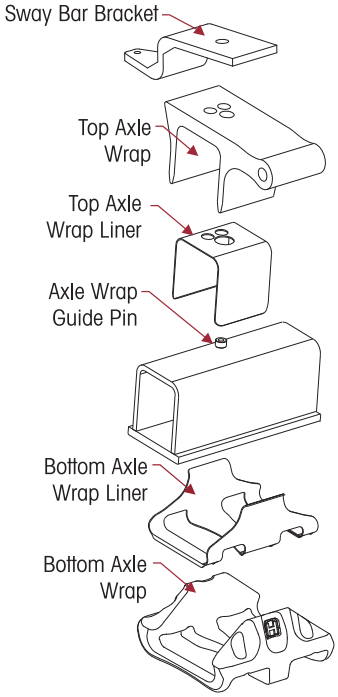

CLAMP GROUP ASSEMBLY

WARNING

DO NOT ASSEMBLE CLAMP GROUP WITHOUT AXLE WRAP LINERS. FAILURE TO DO SO CAN CAUSE LOSS OF VEHICLE CONTROL, PROPERTY DAMAGE OR PERSONAL INJURY.

1. Install the new top axle wrap liner on the axle. Index the liner with the axle's guide pin, see Figure 9-23.

CAUTION

DO NOT STRIKE THE TOP AXLE WRAP DIRECTLY WITH A HAMMER. DAMAGE TO THE ALUMINUM AXLE WRAP WILL OCCUR. USA A PLASTIC DEAD BLOW MALLET WITH CARE WHEN INSTALLING THE AXLE WRAP.

WARNING

SECURELY INSTALL THE TOP AXLE WRAP TO THE AXLE. FAILURE TO DO SO CAN CAUSE LOSS OF CONTROL OF THE VEHICLE, PERSONAL INJURY OR PROPERTY DAMAGE.

SERVICE HINT

Apply a lubricant (such as an aerosol silicone) to the outer surface of the plastic liner to aid in assembly of the top axle wrap.

2. Install the top axle wrap, the axle wrap must be aligned with the guide pin on the axle.
3. At this point in the assembly **DO NOT** install anything further on the axle.

AXLE ASSEMBLY

1. Place the new axle on the floor jack and position the axle under the vehicle.
2. Raise the axle into position. Care must be taken at this point to ensure that the leaf spring bolt aligns with the axle top wrap and sway bar, see Figure 9-24.
3. Slide the sway bar bracket over the axle wrap , verify that the dowel pin holes align correctly with the dowel pin on the leaf spring and wrap leaf assembly.
4. Completely raise the axle, fully engaging the leaf spring assembly into the axle wrap and sway bar bracket.

FIGURE 9-24 Vehicles built prior to May 2010

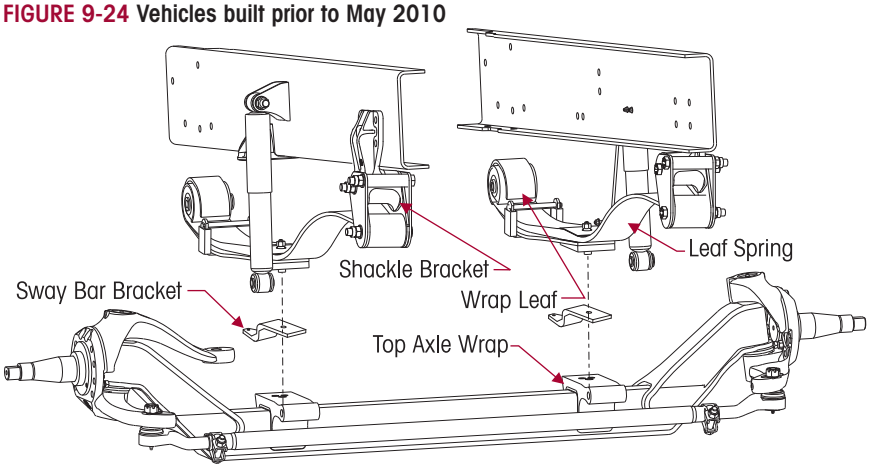

FIGURE 9-25

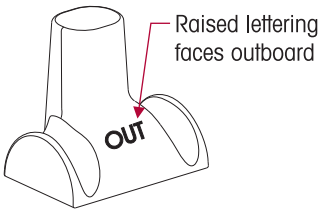

5. Install the top pad with the raised lettering "OUT" facing outboard side on the spring and wrap leaf assembly, see Figure 9-25.

WARNING

DO NOT ASSEMBLE CLAMP GROUP WITHOUT AXLE WRAP LINERS. FAILURE TO DO SO CAN CAUSE LOSS OF VEHICLE CONTROL, PROPERTY DAMAGE OR PERSONAL INJURY.

6. Install the new bottom axle wrap liners on the bottom axle wraps.
7. Install the bottom axle wraps on the axle.
8. Install the new ¾" clamp group U-bolts, washers and locknuts. Snug the bolts, **DO NOT** tighten to torque at this time.
9. Install the shock absorbers on ⅝" lower shock mounting bolts. Install the washers and locknuts and tighten per vehicle manufacturer's torque specifications.

WARNING

ENSURE CLAMP GROUP IS ALIGNED PROPERLY PRIOR TO TIGHTENING HARDWARE. FAILURE TO DO SO CAN CAUSE LOSS OF VEHICLE CONTROL, PROPERTY DAMAGE OR PERSONAL INJURY.

FIGURE 9-26

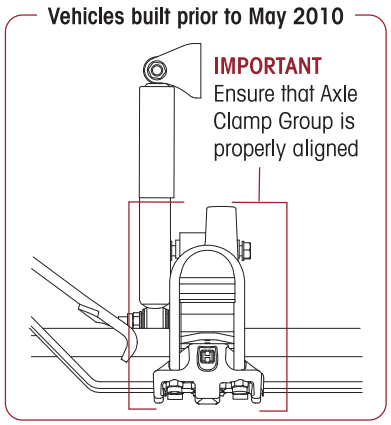

10. Ensure that the clamp groups are properly aligned and the U-bolts are seated in the top pad, and the bottom axle wraps are centered with the top axle wraps, see Figure 9-26.

FIGURE 9-27

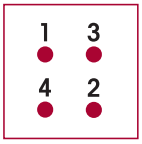

11. Tighten the ¾" clamp group locknuts evenly in 50 foot pounds increments per vehicle manufacturer's torque specifications in the proper pattern to achieve uniform bolt tension, see Figure 9-27.
12. Install the steering knuckles as per the Steering Knuckle replacement instructions in this section.
13. Install the tie rod tube.
14. Install the ⅞" hardened washers on the Ackermann arm and the castle nuts. Tighten the castle nuts to 185 foot pounds, then rotate until the first castle slot lines up with the cotter pin bore in the tie rod end. **DO NOT** back off nut for cotter pin installation.
15. Install the tie rod end cotter pins.
16. Connect the drag link. Install the castle nut to install the steering arm. Tighten the castle nut to 185 foot pounds, then rotate until the first castle slot lines up with the cotter pin bore in the drag link. **DO NOT** back off nut for cotter pin installation.
17. Install the drag link cotter pin.
18. Install the brake backing plate assemblies per the manufacturer's guidelines.
19. Install the brakes, hubs, and wheels as per manufacturer's guidelines.
20. Fill the hubs with the proper lube per the manufacturer's guidelines for recommended lubrication.
21. Grease the front steering components as per lubrication guidelines in the Preventive Maintenance Section of this publication.

STEERING KNUCKLE DISASSEMBLY

See tools needed to remove and install kingpin bushing under the Special Tools Section of this publication.

The steering knuckle disassembly and assembly includes the 'Kingpin Preparation' and Measurement' and Kingpin Bushing Removal process.

1. Remove the wheel and hub assembly.
2. Remove the brake components from steering knuckle.
3. Remove the tie rod assembly.

SERVICE HINT

Lightly tap the side of the Ackermann arm with a mallet to separate the tie rod end from the Ackermann arm, see Figure 9-28.

FIGURE 9-28

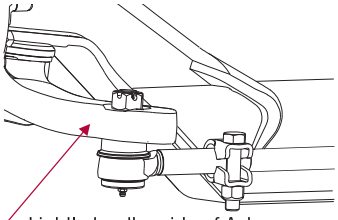

4. Remove the drag link from the knuckle.

WARNING

REMOVAL OF THE CAP SCREWS, SEE FIGURE 9-29, WILL ALLOW THE STEERING KNUCKLE TO SEPARATE FROM THE AXLE. THE STEERING KNUCKLE MUST BE SUPPORTED BEFORE REMOVAL OF THESE TWO (2) CAP SCREWS. FAILURE TO DO SO CAN CAUSE COMPONENT DAMAGE OR PERSONAL INJURY.

FIGURE 9-29

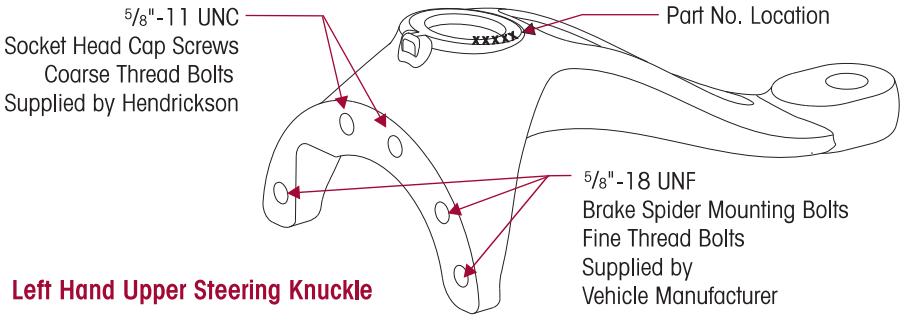

5. Remove the 2 socket head cap screws that connect upper kingpin connection to the steering knuckle, see Figures 9-29 and 9-30.

FIGURE 9-30

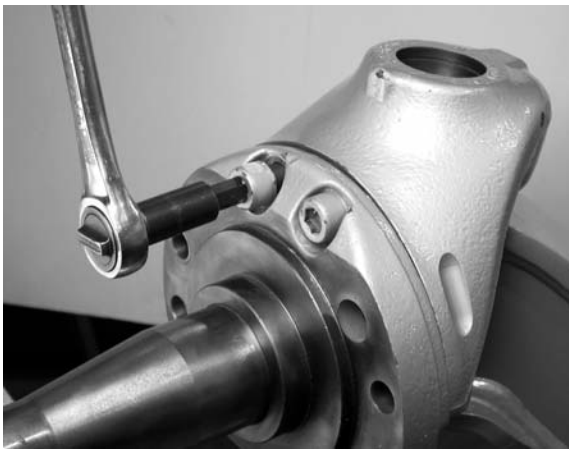

SERVICE HINT

Remove the grease zerks from the knuckle assemblies. This will allow the knuckle assemblies to freely slide up and down the kingpins without creating back pressure.

6. Remove the lower steering knuckle from the kingpin by sliding it down the kingpin.
7. Remove the upper steering knuckle by sliding it up off the kingpin.

KINGPIN PREPARATION AND MEASUREMENT

CLEANING THE GROUND OR POLISHED PARTS

- Use a cleaning solvent to clean ground or polished parts and surfaces. **DO NOT USE GASOLINE.**
- **DO NOT** clean ground or polished parts in a hot solution tank or with water, steam, or alkaline solutions. These solutions will cause corrosion of the parts.

DRYING THE CLEANED PARTS

- Parts must be dried immediately after cleaning. Dry the parts with clean paper towels, clean rags, or compressed air. **DO NOT** dry bearings by spinning with compressed air. Damage to the bearings will result.

PREVENTING CORROSION ON CLEANED PARTS

- Apply a light coating of oil to all cleaned and dried parts that are going to be reused. **DO NOT** apply oil to the brake lining or the brake drums. If parts are to be stored, apply an effective rust inhibitor to all surfaces.

WARNING

TO HELP PREVENT SERIOUS EYE INJURY, ALWAYS WEAR PROPER EYE PROTECTION WHEN YOU PERFORM VEHICLE MAINTENANCE OR SERVICE.

WARNING

SOLVENT CLEANERS CAN BE FLAMMABLE, POISONOUS AND CAUSE BURNS. TO HELP AVOID SERIOUS PERSONAL INJURY, CAREFULLY FOLLOW THE MANUFACTURER'S PRODUCT INSTRUCTIONS AND GUIDELINES AND THE FOLLOWING PROCEDURES:

1. WEAR PROPER EYE PROTECTION.
2. WEAR CLOTHING THAT PROTECTS YOUR SKIN.
3. WORK IN A WELL VENTILATED AREA.
4. DO NOT USE GASOLINE, SOLVENTS OR OTHER MATERIALS THAT CONTAIN GASOLINE THAT CAN EXPLODE.
5. HOT SOLUTION TANKS OR ALKALINE SOLUTIONS MUST BE USED CORRECTLY. FOLLOW THE MANUFACTURER'S RECOMMENDED INSTRUCTIONS AND GUIDELINES CAREFULLY TO HELP PREVENT PERSONAL ACCIDENT OR INJURY.

CAUTION

DO NOT USE HOT SOLUTION TANKS OR WATER AND ALKALINE SOLUTIONS TO CLEAN GROUND OR POLISHED PARTS. DAMAGE TO THE PARTS WILL RESULT.

WARNING

THE STEERTEK HAS A UNIQUE AXLE. THE KINGPIN IS CRYOGENICALLY INSTALLED IN THE AXLE. THE KINGPIN IS A NON-REPLACEABLE COMPONENT OF THE AXLE ASSEMBLY. DO NOT TRY TO REMOVE THE KINGPIN. IF THE KINGPIN SHOWS SIGNS OF MOVEMENT, CONTACT HENDRICKSON PRODUCT ENGINEERING AND TECH SERVICES.

1. Prepare and polish the kingpin by removing all grease and excess debris using a fine grit (220 grit or higher) emery cloth and parts solvent, see Figures 9-31 through 9-34.

FIGURE 9-31

FIGURE 9-32

FIGURE 9-33 Kingpin Before Cleaning

FIGURE 9-34 Kingpin After Cleaning

2. Inspect the kingpin for wear or damage. Use a micrometer and measure the upper and lower kingpin in two locations. Positions must be 90º opposed from each other. If the kingpin has less than 1.802" diameter, replacement of the axle is necessary, see Figures 9-35 through 9-38.

Kingpin minimum dimension is 1.802"

FIGURE 9-35

FIGURE 9-36

FIGURE 9-37

FIGURE 9-38

KINGPIN BUSHING REMOVAL

1. Remove the retaining ring for the grease cap.
2. A hydraulic shop press with a minimum forcing capacity of 2.5 tons (minimum press capacity of 5,000 psi or use an arbor press) will be required.

WARNING

BEFORE APPLYING HYDRAULIC PRESSURE TO ANY TOOLING SET-UP, ALWAYS CHECK TO BE SURE THE PRESS PLATE, ADAPTERS, AND COMPONENTS BEING WORKED ON ARE POSITIONED PROPERLY, I.E. "IN LINE" WITH THE RAM. IMPROPER POSITIONING CAN CAUSE PERSONAL INJURY OR COMPONENT DAMAGE.

CAUTION

BEFORE APPLYING HYDRAULIC PRESSURE TO REMOVE OR INSTALL THE KINGPIN BUSHING, SUPPORT THE LOWER STEERING KNUCKLE AS SHOWN IN FIGURES 9-39 AND 9-41. IMPROPER SUPPORT TO THE STEERING KNUCKLES CAN CAUSE COMPONENT DAMAGE.

3. Use the grease cap to press out the kingpin bushing and seal. Remove the grease zerk in the grease cap or use a hollow driver, see Figure 9-39 to press out the kingpin bushing.
4. Install the lower steering knuckle upside down in press. Be sure to support the lower steering knuckle assembly so that it sits in-line with the press, see Figure 9-40.
5. Use the same procedure to remove the kingpin bushing in the upper kingpin connection or the steering arm, see Figures 9-39 through 9-41.
6. Clean the parts and inspect for reassembly, see Figure 9-42.

FIGURE 9-39

FIGURE 9-40

FIGURE 9-41

FIGURE 9-42

STEERING KNUCKLE BORE MEASUREMENT

Complete the following steering knuckle bore inspection and the measurement instructions prior to installing the kingpin bushing.

1. Measure the upper knuckle bore inside diameter at two locations. Always use an inside micrometer or a telescoping gauge when taking a knuckle bore measurement. Some out-of-roundness at the top and bottom of the bore edges is acceptable. Steering knuckle bore diameter is 1.938" ± 0.003"
2. Measure the upper and lower bore in two positions and at two locations. The two positions must be 90º opposed from each other, see Figures 9-43 through 9-45. If the average measurement is more than the knuckle bore maximum diameter specification, replace the knuckle.

FIGURE 9-43

FIGURE 9-44

FIGURE 9-45

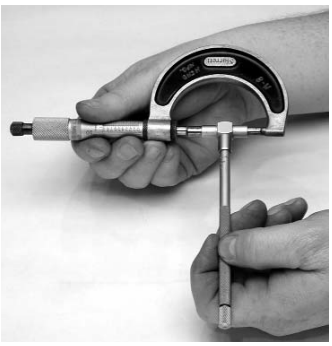

KINGPIN BUSHING INSTALLATION

1. A hydraulic shop press with a minimum forcing capacity of 10 tons and a kingpin bushing driver will be required.

WARNING

BEFORE APPLYING HYDRAULIC PRESSURE TO ANY TOOLING SET-UP, ALWAYS CHECK TO BE SURE THE PRESS PLATE, ADAPTERS, AND COMPONENTS BEING WORKED ON ARE POSITIONED PROPERLY, I.E. "IN LINE" WITH THE RAM. IMPROPER POSITIONING CAN CAUSE PERSONAL INJURY OR COMPONENT DAMAGE.

2. Install the lower or upper steering knuckle in the press.
3. Install the kingpin bushing from the machined side (axle side) of the lower or upper steering knuckle using a bushing driver, (see driver specifications in the Special Tools Section of this publication). Press in bushing to a depth of no less than $^{15}/_{64}$" (0.236") or 6 millimeters and no more than $^{5}/_{16}$" (0.32") or 8 millimeters, see Figures 9-46 to 9-48.
4. Following this procedure it is necessary to ream the kingpin bushings to fit the kingpins, see Kingpin Bushing Reaming Instructions.

FIGURE 9-46

FIGURE 9-47

FIGURE 9-48

KINGPIN BUSHING REAMING

CAUTION

REAM THE KINGPIN BUSHINGS WITH AN ADJUSTABLE STRAIGHT FLUTE REAMER. (SEE SPECIAL TOOLS SECTION OF THIS PUBLICATION) DO NOT HONE OR BURNISH THE KINGPIN BUSHINGS. HONING OR BURNISHING WILL DAMAGE THE BUSHINGS AND VOID WARRANTY.

WARNING

WHEN INSTALLING STEERING KNUCKLE COMPONENTS IN A VISE IT IS NECESSARY TO PROTECT THE MACHINED SURFACES FROM GOUGES OR MARRING BY USING BRASS JAWS. FAILURE TO DO SO CAN CAUSE PREMATURE PART DAMAGE, DAMAGE TO THE STEERING KNUCKLE COMPONENTS, LOSS OF WARRANTY, LOSS OF VEHICLE CONTROL, CAUSING PERSONAL INJURY OR PROPERTY DAMAGE.

1. Install the lower steering knuckle assembly in a vise with brass jaws.

SERVICE HINT

It is acceptable to mount the knuckle components in a vise either vertically or horizontally when performing the reaming procedure.

2. Install the reamer into the lower steering knuckle until the blades touch the kingpin bushing.
3. Rotate the reamer with light downward pressure. Rotate the reamer smoothly. **DO NOT** apply too much pressure, see Figures 9-49 and 9-50.
4. Slide the reamer out of the bottom of the steering knuckle assembly. If it is necessary to remove the reamer from the top, rotate the reamer opposite of cutting rotation.
5. Clean and remove all kingpin bushing material from the steering knuckle assembly. Take special attention to remove material from the grease channels and dimples.
6. Clean the 5/8" brake backing plate bolts with a wire wheel and run a tap through the threads of the lower steering knuckle assembly and then flush out with brake cleaner and dry with compressed air.

FIGURE 9-49 Lower Steering Knuckle in Vise

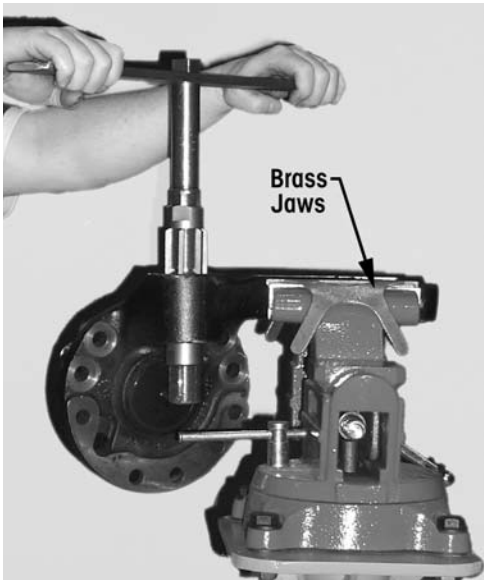

FIGURE 9-50 Upper Steering Knuckle in Vise

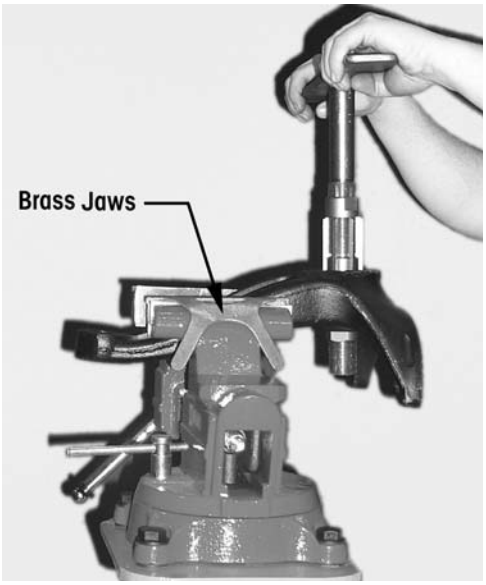

WARNING

PRIOR TO INSTALLATION ENSURE THAT ALL RESIDUAL LOCTITE® MATERIAL IS REMOVED FROM THE MOUNTING BOLTS AND THE THREAD BORES IN THE UPPER STEERING KNUCKLES, AND NEW LOCTITE 277 OR EQUIVALENT IS APPLIED TO HELP ENSURE THAT THE BOLTS SUSTAIN THE PROPER TORQUE REQUIREMENT. FAILURE TO DO SO CAN CAUSE LOSS OF VEHICLE CONTROL RESULTING IN PERSONAL INJURY OR PROPERTY DAMAGE.

NOTE The Hendrickson Genuine socket head cap screw comes with a pre-applied loctite compound.

7. Install the upper and lower steering knuckle on the kingpin.
8. Check for the proper fit by rotating the knuckle assembly back and forth to verify there is no binding on the kingpin, see Figures 9-51 and 9-52.
9. If the bushing is too tight repeat Steps 1-8 until the proper clearance is achieved.

NOTE Bushing size is to be 0.001" larger than the kingpin size.

FIGURE 9-51

FIGURE 9-52

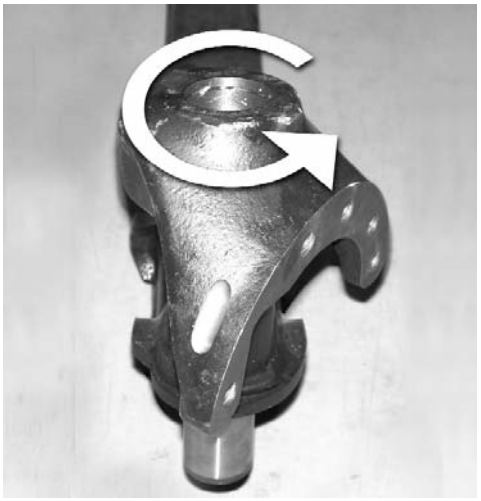

KINGPIN SEAL INSTALLATION

1. Place the steering knuckle assembly in a vise with brass jaws or place on a suitable workbench. The steering knuckle will have the machined surface facing up (axle side up).
2. Lay the kingpin seal into the bore of the steering knuckle. The seal lip should face outward or toward the axle.
3. Use a bushing driver tool and press seal firmly into the steering knuckle assembly.
4. Install the kingpin seal until it makes contact with the kingpin bushing, see Figures 9-53 and 9-54.

FIGURES 9-53 and 9-54

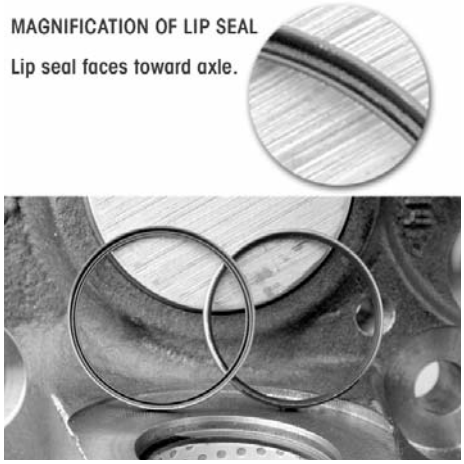

STEERING KNUCKLE ASSEMBLY

After replacement of the kingpin bushings it is necessary to reassemble the steering knuckle assemblies. **DO NOT** substitute aftermarket components when servicing.

FIGURE 9-55

1. Install the thrust bearing on the lower kingpin, see Figure 9-55, with the seal facing up toward axle (the black seal will designate the top side).
2. Install the shim on the upper kingpin.
3. Pack the bushing dimples on the upper and lower steering knuckles with multi purpose Lithium based grease (NLGI Grade 2) before installation.
4. Install the upper steering knuckle on the upper arm kingpin.
5. Install the lower steering knuckle on the lower kingpin and install the old socket head cap screws loose into the top two threaded holes.

SERVICE HINT

The easiest way to achieve this is with the grease caps not installed in the knuckle assemblies. This eliminates back pressure. The assembly can then freely slide up and down on the kingpin. If the grease caps are still installed, remove the grease zerks to avoid creating back pressure. Grease zerks will be re-installed at the end of the procedure.

6. Install a bottle jack under the lower knuckle and slightly raise the knuckle until it is possible to thread in the (3) brake backing plate bolts by hand. These are for guide purposes only.
7. Snug the two socket head cap screws.
8. Lower the bottle jack so that all the vertical clearance is on the underside of the axle.

FIGURE 9-56

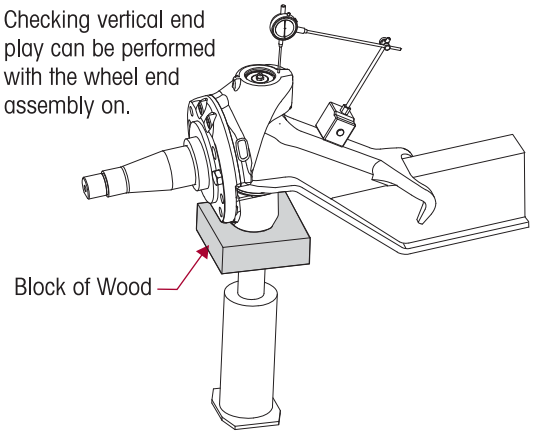

9. Affix a magnetic base dial indicator on the axle and place the tip of the dial indicator on top of the knuckle assembly, see Figure 9-56.
10. Zero the dial indicator.
11. Raise the bottle jack until there is no clearance between the knuckle assembly and the bottom of the axle, slightly lifting the axle.
12. Check the reading on the dial indicator. The specification for vertical travel on the steering knuckle during assembly is 0.008" to 0.011".
13. If the clearance is above 0.011", loosen the socket head cap screws and push down on the knuckle assembly until the proper vertical clearance is achieved. Add (0.005") shim if necessary.
14. If the clearance is below the 0.008", loosen the two socket head cap screws and pull up on the knuckle assembly until the proper vertical clearance is achieved. If the 0.008" minimum clearance is unattainable it may be necessary to remove a 0.005" shim.

NOTE

The ⊞ Hendrickson Genuine part, socket head cap screw comes with a pre-applied loctite compound.

WARNING

PRIOR TO INSTALLATION ENSURE THAT ALL RESIDUAL LOCTITE MATERIAL IS REMOVED FROM THE MOUNTING BOLTS AND THE THREAD BORES IN THE UPPER STEERING KNUCKLE, AND NEW LOCTITE 277 OR EQUIVALENT IS APPLIED TO HELP ENSURE THAT THE BOLTS SUSTAIN THE PROPER TORQUE REQUIREMENT. FAILURE TO DO SO CAN CAUSE LOSS OF VEHICLE CONTROL RESULTING IN PERSONAL INJURY OR PROPERTY DAMAGE.

15. Remove one old socket head cap screw, replace with new socket head cap screw and tighten to 175-200 foot pounds torque.
16. Remove second socket head cap screw, replace with new socket head cap screw and tighten to 175-200 foot pounds torque.
17. Recheck the vertical clearance with the dial indicator or a 0.010" feeler gauge, see Figure 9-56.
18. Remove the brake spider bolts, they should thread out freely.
19. Remove the bottle jack and continue assembling the wheel ends.

IMPORTANT NOTE

Loctite applied to the three brake spider bolts is a critical procedure to ensure that these bolts sustain the torque requirement for the steering knuckle assembly.

20. Apply loctite to the three brake spider bolts prior to installation into the brake spider. Tighten bolts to 175-200 foot pounds torque.

WARNING

DO NOT GREASE KNUCKLES WITHOUT THE BRAKE SPIDER INSTALLED AND TIGHTENED TO PROPER TORQUE. FAILURE TO DO SO CAN CAUSE COMPONENT DAMAGE RESULTING IN FAILURE AND LOSS OF VEHICLE CONTROL, POSSIBLY CAUSING PERSONAL INJURY OR PROPERTY DAMAGE.

21. Install the tie rod end into the lower steering knuckle arm.
22. Tighten the tie rod castle nuts to 185 foot pounds torque, then rotate the castle nut to the next castle slot and install the tie rod cotter pin.
23. Install the drag link into the steering arm and tighten to the vehicle manufacturer's torque specifications.
24. Install new o-rings on the grease caps and lubricate o-rings with grease.
25. Install grease caps and new retaining rings.
26. Install brakes, drums, wheels, tires and grease steering knuckles with the vehicle on the floor.
27. Remove the jack and safety stands.

TIE ROD END AND CROSS TUBE

NOTE

The FCCC tie rod assembly is designed for use on a mechanical suspension with hydraulic brakes, it is not designed for vehicles with air brakes.

- Hendrickson supplies different tie rod assemblies and each type may take a different replacement tie rod end kit to service. Prior to ordering find the part number on the tie rod tube, see Hendrickson Publication No. SEU-0223 or contact Hendrickson Sales Engineering for corresponding kit numbers.

DISASSEMBLY

1. Chock the wheels.
2. Position the steer axle tires straight ahead.
3. Remove the cotter pin and castle nut.
4. Lightly tap the side of the Ackermann arm to loosen the tie rod end from the Ackermann arm, see Figure 9-57.

FIGURE 9-57

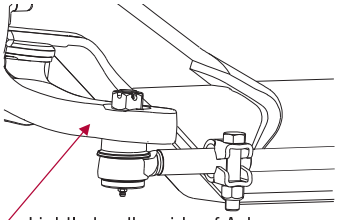

Lightly tap the side of Ackermann arm to loosen the tie rod end.

5. Repeat to Steps 3 and 4 to remove the other tie rod end.
6. Remove the cross tube and tie rod ends from the vehicle.
7. Mount the cross tube in a soft jaw vice.
8. Remove the hardware from the clamp on the cross tube.
9. Count the exposed threads on the tie rod end being replaced.
10. Remove the tie rod end from the cross tube.

WARNING

DO NOT HEAT THE CROSS TUBE WITH A TORCH TO FACILITATE THE REMOVAL OF THE TIE ROD END. THE USE OF SUCH HEAT CAN ADVERSELY AFFECT THE STRENGTH OF THE CROSS TUBE. A COMPONENT DAMAGED IN THIS MANNER WILL RESULT IN LOSS OF WARRANTY, AND CAN RESULT IN THE AND LOSS OF VEHICLE CONTROL, AND POSSIBLE PERSONAL INJURY OR PROPERTY DAMAGE.

11. If the opposing tie rod end is being replaced, repeat Steps 8-10.
12. Inspect the cross tube for dents, cracks, or thread damage. Replace the cross tube if needed.

ASSEMBLY

1. Lubricate the new tie rod end threads with Anti-Seize.

NOTE

When installing the cross tube the thread direction of the tie rod ends are as follows:
- A right hand threaded tie rod end will be installed into the right side Ackermann arm.
- A left hand threaded tie rod end will be installed into the left side Ackermann arm.

2. Install the new tie rod end into the cross tube, leaving the same amount of threads exposed that were counted on the failed tie rod end prior to removal.

WARNING

THREADED PORTION OF THE TIE ROD END MUST EXTEND PAST THE SLOTS INTO THE TIE ROD CROSS TUBE, SEE FIGURE 9-58. FAILURE TO DO SO CAN CAUSE COMPONENT DAMAGE, LOSS OF VEHICLE CONTROL AND POSSIBLE PERSONAL INJURY OR PROPERTY DAMAGE.

WARNING

IT IS CRITICAL TO CHECK THE 5⁄8" TIE ROD CLAMP BOLT HEAD LOCATION TO VERIFY THE CLAMP FASTENERS HAVE SUFFICIENT CLEARANCE AWAY FROM THE LOWER SHOCK MOUNT AT FULL WHEEL CUT. THE FASTENERS MUST NOT CONTACT THE LOWER SHOCK MOUNT. FAILURE TO DO SO CAN CAUSE ONE OR MORE COMPONENTS TO FAIL CAUSING LOSS OF VEHICLE CONTROL AND POSSIBLE PERSONAL INJURY OR PROPERTY DAMAGE.

FIGURE 9-58

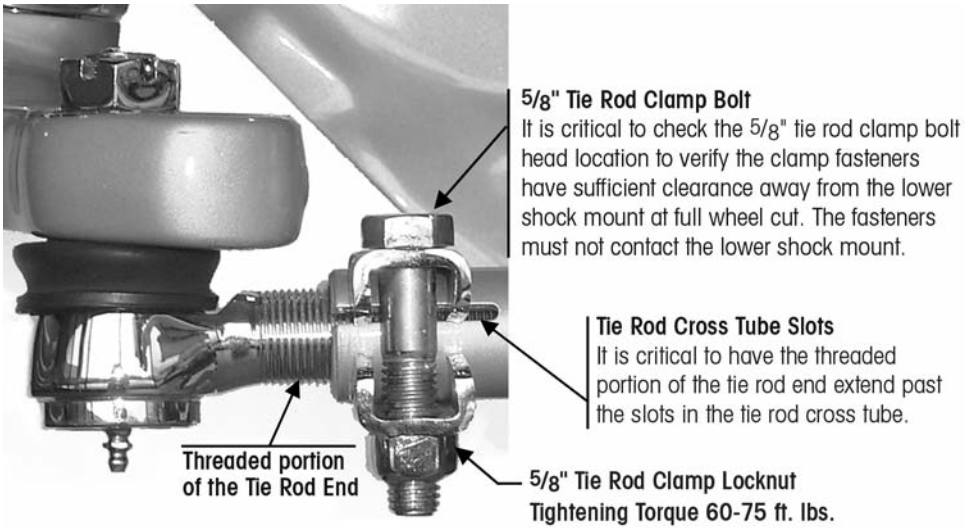

3. Replace the opposing tie rod end if necessary by repeating Steps 2 and 3.

WARNING

DO NOT HEAT THE CROSS TUBE WITH A TORCH TO ROTATE THE CROSS TUBE IN THE TIE ROD END. THE USE OF SUCH HEAT CAN ADVERSELY AFFECT THE STRENGTH OF THE CROSS TUBE. A COMPONENT DAMAGED IN THIS MANNER WILL RESULT IN LOSS OF WARRANTY, AND CAN RESULT IN THE LOSS OF VEHICLE CONTROL, AND POSSIBLE LOWER STEERING KNUCKLE PERSONAL INJURY OR PROPERTY DAMAGE.

4. If replacing opposing tie rod end is not necessary it is critical that the cross tube will rotate in the opposing tie rod end.
5. Install the cross tube into the Ackermann arms.
6. Tighten the castle nuts to 185 foot pounds torque then rotate the castle nut to the next castle slot and install cotter pin.
7. Grease tie rod ends. See Lubrication Chart for required lubricant in the Preventive Maintenance Section of this publication.
8. Set the toe, see Toe Adjustment Procedure in the Alignment & Adjustments Section of this publication.

SECTION 10
Front Wheel Alignment Specifications

SOFTEK for FCCC Motorhome Chassis

FRONT AIR MODULE SUSPENSION ALIGNMENT SPECIFICATION

CAMBER[1]	DESIGN SPECIFICATION	RANGE	
		MINIMUM	MAXIMUM
LEFT	0.0° ± 1.0°	-1.0°	+1.0°
RIGHT	-0.25° ± 1.0°	-1.25°	+0.75°
CROSS	0.0° Max 2°	—	—

CAMBER NOTES:

[1]The camber angle is not adjustable. **DO NOT** bend axle or otherwise try to adjust camber. If found out of specification, notify Hendrickson Tech Services for further information.

CASTER[1,2]	DESIGN SPECIFICATION	RANGE	
		MINIMUM	MAXIMUM
LEFT	3.9° ± 1.0°	+2.9°	+4.9°
RIGHT	3.9° ± 1.0°	+2.9°	+4.9°
CROSS[3]	0.0° Max 2°	—	—

CASTER NOTES:

1. Caster is determined with the vehicle at specified ride height for air suspension or at rated load for mechanical suspension systems. It is critical that the vehicle front and rear ride height is within specifications prior to performing a caster measurement or adjustment.
2. In most cases actual vehicle caster is defined with the frame rails at zero slope. Refer to the vehicle manufacturer's specifications for correct frame rail slope. (Both the alignment surface and the vehicle's frame rails should be level during execution of alignment procedures). For vehicles with a positive frame rake (higher in rear) add the frame slope (in degrees) to the caster reading to determine true vehicle caster.
3. **The cross caster angle is not adjustable** – **DO NOT** bend axle or otherwise try to adjust cross caster. If found out of specifications notify Hendrickson Tech Services for further information. Changes to caster can be attained by using caster shims as provided by the vehicle manufacturer or chassis and body manufacturer. Caster shims must match, side to side, to reduce uneven loading to the suspension components. **The use of two different angle caster shims will not correct cross caster.**
4. **Example of caster adjustment:** 2.5° RH/3° LH, would require one, 1.0 shim on each side to increase caster and achieve 3.50° RH/4.00° LH, which is in specification. **DO NOT** attempt to use uneven shims.

Hendrickson recommends following TMC[2] practices:

	DESIGN SPECIFICATION[1]	RANGE	
		MINIMUM	MAXIMUM
TOTAL TOE[2]	1/16" ± 1/32" (0.06" ± 0.03")	1/32" (0.03")	3/32" (0.09")

TOE-IN NOTES:

1. Toe-in is to be set and adjusted in the normal vehicle unladed configuration. Actual vehicle curb weight on the ground. Toe should be checked at the tires front and rear tread center, at a distance above ground equal to the tire's rolling radius.
2. In most instances total toe is set by the vehicle manufacturer or body builder. Consult the vehicle manufacturer for specifications.

SECTION 11
Torque Specifications

Vehicles built after May 2010 – 9K/10K/12K Capacity

RECOMMENDED TORQUE VALUES PROVIDED IN FOOT POUNDS

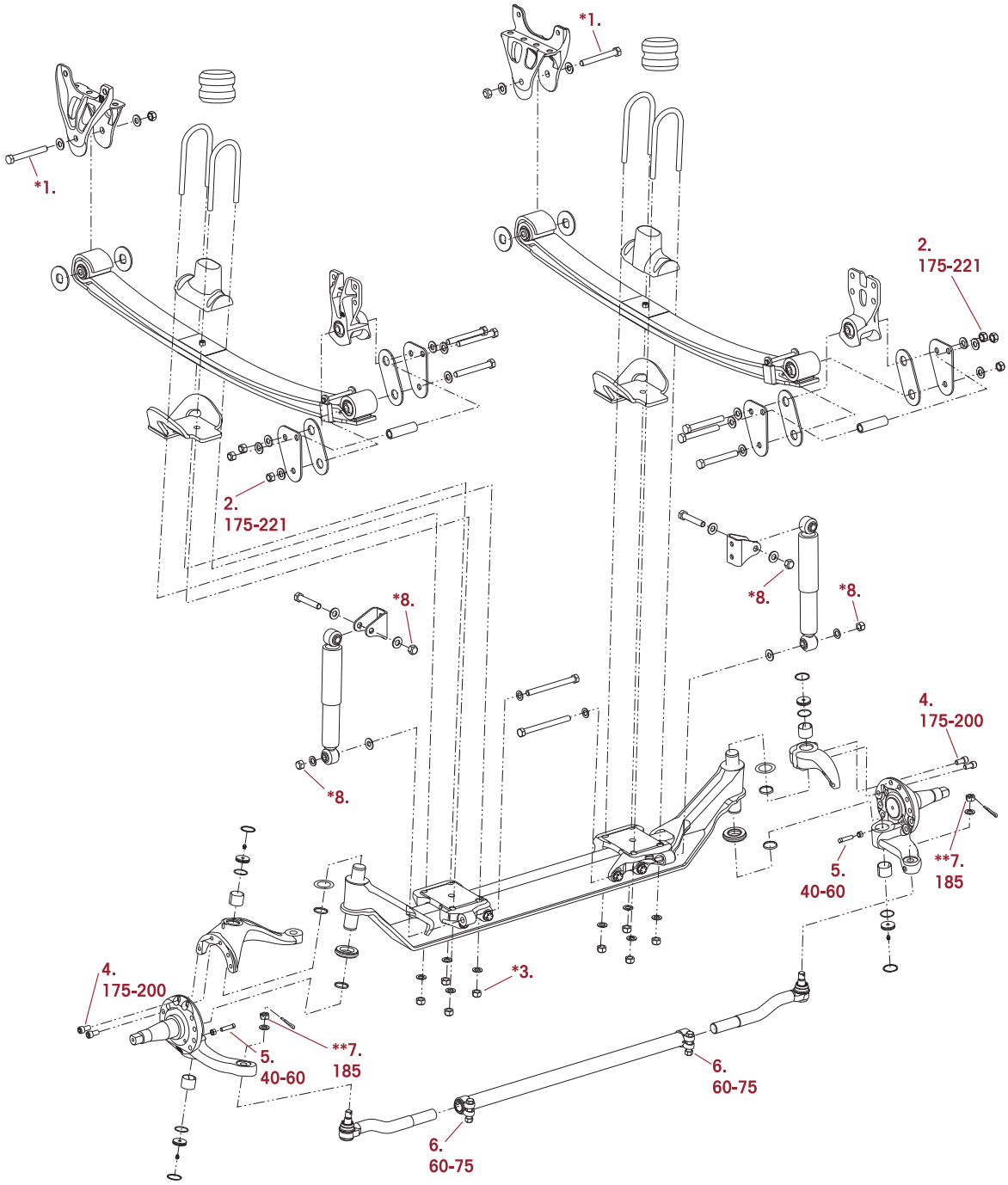

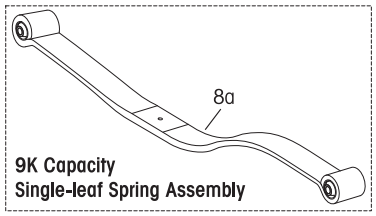

9K Capacity
Single-leaf Spring Assembly

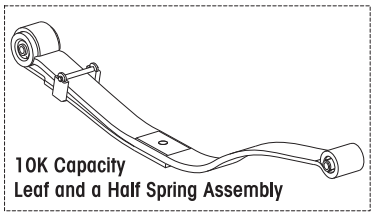

10K Capacity
Leaf and a Half Spring Assembly

SOFTEK for FCCC Motorhome Chassis

HENDRICKSON RECOMMENDED TORQUE SPECIFICATIONS

NO.	COMPONENT	QUANTITY	SIZE	TORQUE VALUE in foot pounds
1	Front Frame Hanger to Leaf Spring Eye Fasteners (Bolt inserted from the outboard to inboard side)	2	¾"	*
2	Rear Shackle Bracket Fasteners	4	¾"	175-221
3	Clamp Group Fasteners	4	¾"	*
	WARNING ENSURE CLAMP GROUP IS ALIGNED PROPERLY PRIOR TO TIGHTENING HARDWARE. FAILURE TO DO SO CAN CAUSE LOSS OF VEHICLE CONTROL, PROPERTY DAMAGE OR PERSONAL INJURY.			
4	Knuckle Attachment Bolt (Socket Head Cap Screw)	4	5/8"	175-200
5	Knuckle / Axle Wheel Stop Bolt	2	5/8"	40-60
6	Tie Rod Tube to Tie Rod End	2	5/8"	60-75
7	Tie Rod End to Lower Steering Knuckle (Castle Nut)	2	7/8"	**185
8	Shocks Eye Fasteners	4	5/8"	*

- **All hardware ¼" and greater is Grade 8 with no additional lubrication.**
- **Frame mount hardware in most cases huck style fasteners supplied by the vehicle or chassis and body manufacturer.**

NOTES:

* All fasteners highlighted in gray in the matrix are not supplied by Hendrickson. Torque values provided are controlled and subject to change by the vehicle manufacturer. Refer to vehicle manufacturer's service manual for more information.

** Torque to 185 foot pounds, advance nut to next hex face to install cotter pin. **DO NOT** back off nut for cotter pin installation.

Vehicles built prior to May 2010 – 9K/10K Capacity

RECOMMENDED TORQUE VALUES PROVIDED IN FOOT POUNDS

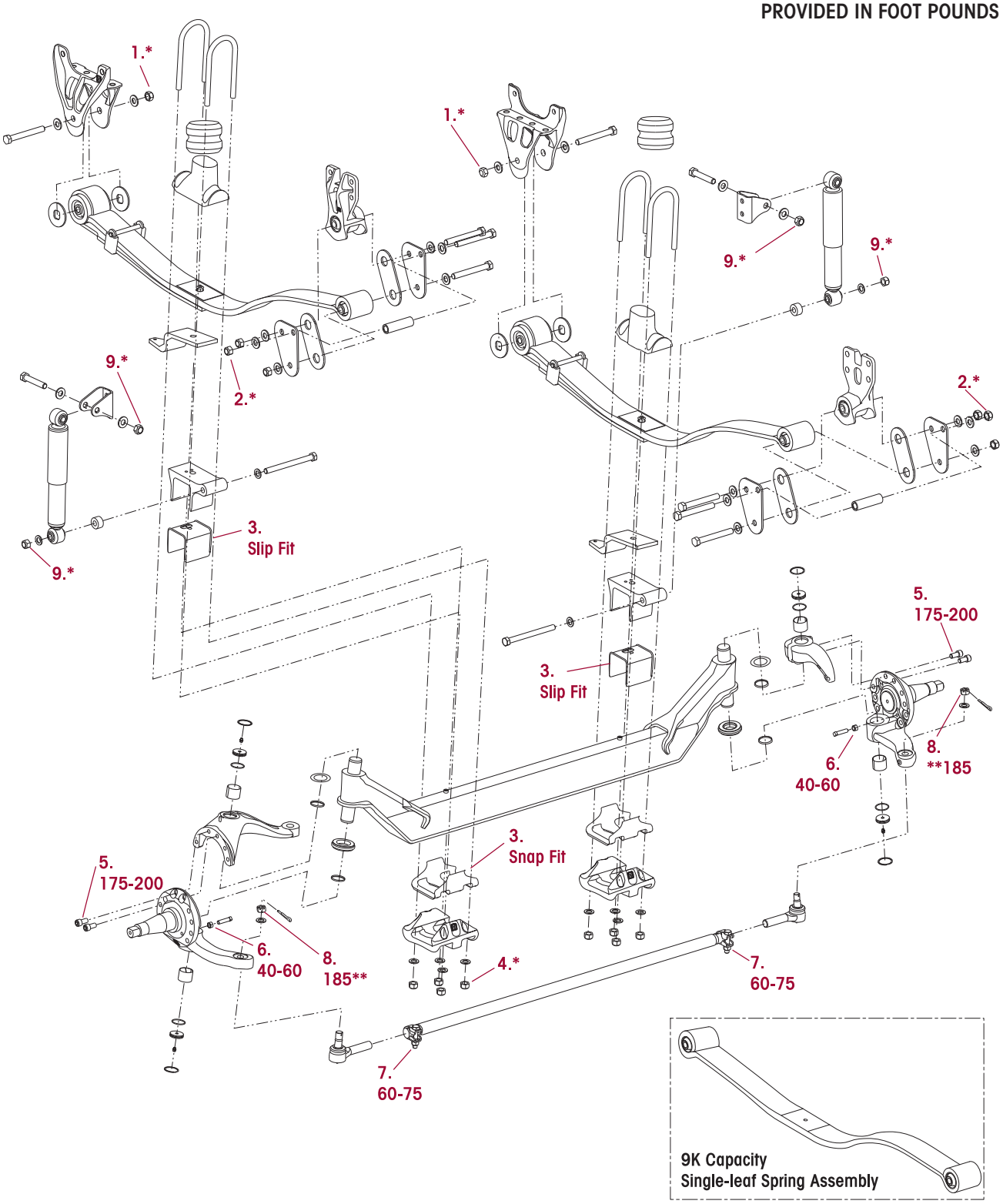

SOFTEK for FCCC Motorhome Chassis

HENDRICKSON RECOMMENDED TORQUE SPECIFICATIONS

NO.	COMPONENT	QUANTITY	SIZE	TORQUE VALUE (in foot pounds)
1	Front Frame Hanger to Leaf Spring Eye Fasteners (Bolt inserted from the outboard to inboard side)	2	¾"	*
2	Rear Shackle Bracket Fasteners	4	¾"	*
3	Axle Wrap Liners for Clamp Group	4	Formed	Slip Fit
	WARNING DO NOT ASSEMBLE CLAMP GROUP WITHOUT AXLE WRAP LINERS. FAILURE TO DO SO CAN CAUSE LOSS OF VEHICLE CONTROL, PROPERTY DAMAGE OR PERSONAL INJURY.			
4	Clamp Group Fasteners	4	¾"	*
	WARNING ENSURE CLAMP GROUP IS ALIGNED PROPERLY PRIOR TO TIGHTENING HARDWARE. FAILURE TO DO SO CAN CAUSE LOSS OF VEHICLE CONTROL, PROPERTY DAMAGE OR PERSONAL INJURY.			
5	Knuckle Attachment Bolt (Socket Head Cap Screw)	4	5/8"	175-200
6	Knuckle / Axle Wheel Stop Bolt	2	5/8"	40-60
7	Tie Rod Tube to Tie Rod End	2	5/8"	60-75
8	Tie Rod End to Lower Steering Knuckle (Castle Nut)	2	7/8"	**185
9	Shocks Eye Fasteners	4	5/8"	*

- **All hardware ¼" and greater is Grade 8 with no additional lubrication.**
- **Frame mount hardware in most cases huck style fasteners supplied by the vehicle or chassis and body manufacturer.**

NOTES:

* All fasteners highlighted in gray in the matrix are not supplied by Hendrickson. Torque values provided are controlled and subject to change by the vehicle manufacturer. Refer to vehicle manufacturer's service manual for more information.

** Torque to 185 foot pounds, advance nut to next hex face to install cotter pin. **DO NOT** back off nut for cotter pin installation.

SECTION 12
Troubleshooting Guide

SOFTEK for FCCC Motorhome Chassis		
TROUBLESHOOTING GUIDE		
CONDITION	**POSSIBLE CAUSE**	**CORRECTION**
Worn or damaged kingpins and kingpin bushings	Dirt in system– contaminated lubricant	Polish and inspect kingpin, replace bushing and seals, then follow specified lubrication procedures
	Incorrect lubricant	Lubricate axle with specified lubricant
	Axle not lubricated at scheduled frequency	Lubricant axle at scheduled frequency
	Incorrect lubrication procedures	Use correct lubrication procedures
	Lubrication interval not compatible with operating conditions	Change lubrication interval to match operating conditions
	Worn or missing seals	Replace worn or missing seals
Vibration or shimmy of front axle during operation	Caster out of specification	Adjust caster
	Wheels and/or tires out of balance	Balance or replace wheels and/or tires
	Worn shock absorbers	Replace shock absorbers
	Wheel bearing adjustment	Adjust wheel bearing to vehicle manufacturer's specifications.
	Brake rotor is warped	See vehicle manufacturer for brake support component.
Excessive wear on tires or uneven tire tread wear	Tires have incorrect air pressure	Adjust tire pressure to manufacturer's specification
	Tires out of balance	Balance or replace tires
	Incorrect axle alignment	Align axles
	Incorrect toe setting	Adjust toe-in to vehicle manufacturer's specification
	Incorrect steering arm geometry	Repair steering system as necessary
	Excessive wheel bearing end play	Check specified wheel nut torque, replace worn or damaged wheel bearings
	Wheel bearing adjustment	Adjust wheel bearing to vehicle manufacturer's specifications
Vehicle is hard to steer	Low pressure in the power steering system	Repair power steering system
	Steering linkage needs lubrication	Lubricate steering linkage
	Steering knuckles are binding	Check vertical clearance
	Incorrect steering arm geometry	Repair steering system as necessary
	Caster out of adjustment	Adjust caster as necessary
	Tie rod ends hard to move	Grease or if problem persists replace tie rod ends
	Worn thrust bearing	Replace thrust bearing

SOFTEK for FCCC Motorhome Chassis		
TROUBLESHOOTING GUIDE (CONTINUED)		
CONDITION	**POSSIBLE CAUSE**	**CORRECTION**
Tie rod ends are worn and require replacement	Tie rod ends need lubrication	Lubricate tie rod end. Make sure lubrication schedule is followed
	Severe operating conditions	Increase frequency of inspection and lubrication intervals
	Damaged boot on tie rod end	Replace tie rod end
Bent or broken cross tube, tie rod end ball stud or tie rod end NOTE: Damaged components require replacement	Pump/gear relief valve pressure setting exceeds system specifications	Adjust power steering system to vehicle manufacturer's specified pressure
	Steering gear poppets improperly set or malfunctioning	Check for proper operation or adjust poppet to vehicle manufacturer's specifications
	Axle stops improperly set	Set axle stops to vehicle manufacturer's specifications
	Axle stops improperly set	Increase frequency of inspection and lubrication intervals
Worn or broken steering ball stud	Drag link fasteners tightened past specified torque	Tighten drag link fasteners to the specified torque
	Lack of lubrication or incorrect lubricant	Lubricate linkage with specified lubricant
	Power steering stops out of adjustment	Adjust steering stops to vehicle manufacturer's specifications
Suspension has harsh or bumpy ride	Broken or worn leaf spring	Replace leaf spring
	Front suspension overloaded	Redistribute steer axle load
Restricted steering radius	Steering stops not adjusted correctly	Adjust steering stops to achieve correct wheel cut
Vehicle leans	Leaf spring broken	Replace leaf spring
	Excessive weight bias	Contact vehicle manufacturer
Vehicle wanders	Caster out of specification	Adjust caster to specification
	Incorrect toe setting	Adjust toe to specification
	Air in the power steering system	Remove air form the power steering systems
	Rear ride height out of adjustment (if applicable)	Adjust ride height to specification (if applicable)

SECTION 13
Reference Material

This technical publication covers Hendrickson Truck Suspension System's recommended procedures for our parts/products. Other components play a major role in overall performance and Hendrickson recommends to follow the specific vehicle manufacturer's recommendation for care and maintenance. Some recommended procedures have been developed by The Technology & Maintenance Council (TMC) and Hendrickson supports these recommendations. We have compiled a list of these below.

TMC

To obtain copies of the following RP's, video's, or charts, contact TMC at:

TMC/ATA
2200 Mill Road
Alexandria, VA 22314

Phone: 703-838-1763
website: tmc.truckline.com
online ordering: www.truckline.com/store

Important References

TMC RP 214B	Tire/Wheel End Balance and Runout
TMC RP 216	Radial Tire Conditions Analysis Guide
TMC RP 219A	Radial Tire Wear Conditions and Causes
TMC RP 222A	User's Guide To Wheels and Rims
TMC RP 230	Tire Test Procedures for Tread wear, Serviceability, and Fuel Economy
TMC RP 514	Pre-Alignment Inspection
TMC RP 618	Wheel Bearing Adjustment Procedure
TMC RP 620B	Front End Alignment Steering Geometry
TMC RP 708A	Trailer Axle Alignment
TMC RP 642	Guidelines For Total Vehicle Alignment
TMC RP 644	Wheel End Conditions Analysis Guide
TMC RP 645	Tie Rod End Inspection and Maintenance Procedure
Video's	
TMC T0326	Wheel End Maintenance
TMC T0372	Tire Pre-Trip Inspection Guidelines
Other	
TMC T0400	Wheel bearing Adjustment Procedure Wall Chart

www.hendrickson-intl.com

HENDRICKSON®

Truck Suspension Systems
800 South Frontage Road
Woodridge, IL 60517-4904 USA

630.910.2800
Fax 630.910.2899

Information contained in this literature was accurate at the time of publication. Product changes may have been made after the copyright date that are not reflected.
© 2011 Hendrickson USA, L.L.C. (U.S. Rights) Hendrickson International Corporation (Rights Outside U.S.) All Rights Reserved

Printed in United States of America