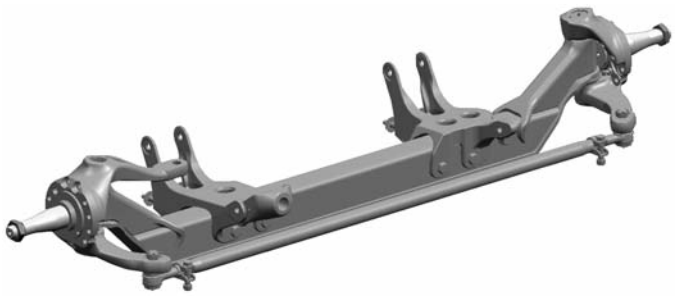

TECHNICAL PROCEDURE

STEERTEK for International Truck Multilink FAS

SUBJECT: Service Instructions
LIT NO: 17730-258
DATE: December 2008 **REVISION:** B

TABLE OF CONTENTS

Section 1 Introduction 2

Section 2 Product Description 3

Section 3 Important Safety Notice 4

Section 4 Parts List 8

Section 5 Towing Procedures 9

Section 6 Special Tools 12

Section 7 Preventive Maintenance
- Visual Inspection 13
- Lubrication Intervals 13
- Kingpin Lubrication 14
- Tie Rod End Lubrication 14
- Tie Rod End Inspection 15
- Tire Inspection 17
- Kingpin Bushing Inspection 20
- Steering Knuckle Inspection 21

Section 8 Alignment & Adjustments
- Alignment Definitions 22
- General Inspection Prior to Alignment . . . 24
- Front Wheel Alignment 25
- Steering Stop 27
- Toe Setting 28

Section 9 Component Replacement
- Fasteners 30
- Axle Brackets 30
- Steering Knuckle
  - Steering Knuckle Disassembly 30
  - Kingpin Preparation & Measurement . 31
  - Kingpin Bushing Removal 33
  - Steering Knuckle Bore Measurement . 34
  - Kingpin Bushing Installation 35
  - Kingpin Bushing Reaming 35
  - Kingpin Seal Installation 37
  - Steering Knuckle Assembly 38
- Tie Rod End and Cross Tube 40

Section 10 Troubleshooting Guide 42

Section 11 Torque Specifications 44

Section 12 Front Alignment Specifications . . 45

Reference Materials 46

Technical Procedure Publication Quiz 47

HENDRICKSON
The World Rides On Us™

SECTION 1
Introduction

This publication is intended to acquaint and assist maintenance personnel in the preventive maintenance, service, repair, and rebuild of the following Hendrickson equipment as installed on applicable International Truck Multilink Front Air Suspension (FAS) vehicles. Carefully read and understand all safety related information within this publication, on all decals and in all such materials provided by the vehicle manufacturer before conducting any maintenance, service or repair.

- **STEERTEK** — A lightweight, formed and robotically welded steer axle assembly.

NOTE Use only Hendrickson Genuine parts for servicing this STEERTEK axle system.

It is important to read and understand the entire Technical Procedure publication prior to performing any maintenance, service, repair, or rebuild of the product. The information in this publication contains parts lists, safety information, product specifications, features, proper maintenance, service, repair and rebuild instructions for the STEERTEK axle.

A Technical Procedure Quiz has been included at the back of this publication. Hendrickson will provide personalized STEERTEK Technical Procedure Quiz Achievement Certificate to candidates scoring 80% or higher on the test. Simply complete the test and fill in the enclosed answer sheet or write your answers on a separate sheet with the return address, name, phone number, and company name as it will appear on the award to:

Hendrickson
ATTN: Truck Marketing Test Quiz Assessment
800 S. Frontage Road
Woodridge, Illinois 60517

Hendrickson reserves the right to make changes and improvements to its products and publications at any time. Contact Hendrickson Tech Services at 630-910-2800 or e-mail techservices@hendrickson-intl.com for information on the latest version of this manual.

The latest revision of this publication is also available online at www.hendrickson-intl.com.

SECTION 2
Product Description

Axle beam — The box-shaped design provides a stiffer axle and resists torsional, longitudinal and vertical loads more effectively than traditional axle beams.

Adjustable tie rod — To help maximize tire life, the tie rod easily adjusts toe-in/out.

Steering knuckles — The steering and tie rod arms are integrated for increased strength and reduced weight. The unique steering knuckle packaging delivers a maximum of 50° wheel cut. The two piece knuckle design makes replacing the kingpin bushings easier by eliminating the need to remove the kingpins.

FIGURE 2-1 STEERTEK for International Truck Multilink FAS

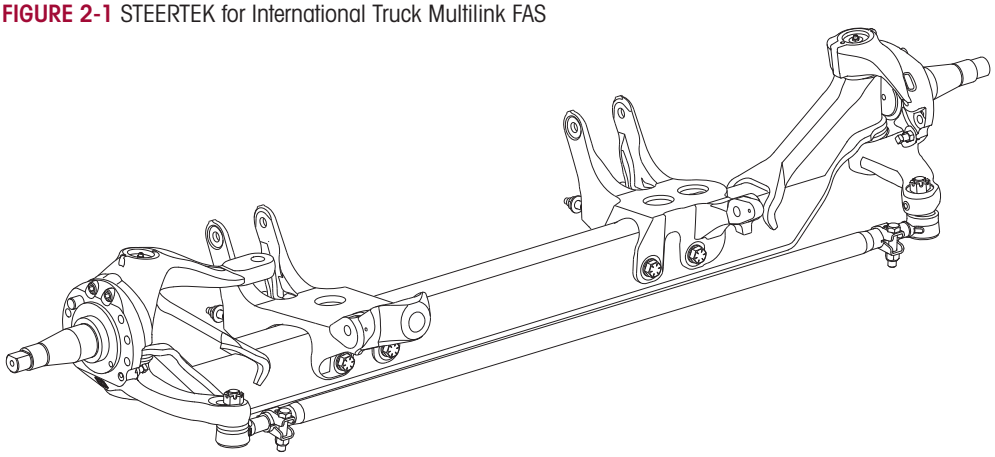

TECHNICAL NOTES

1. The STEERTEK axle is available with 70.87" Kingpin Intersections (KPI).
2. The STEERTEK axle offers 4.25" axle beam drop height. Axle beam drop is measured from the kingpin intersection to the top of the axle.
3. STEERTEK axle system weight is based on a 4.25" drop height and a 70.87" KPI axle. Weight includes the axle beam, knuckle/steering arm assemblies, suspension attachment brackets and tie rod assemblies.
4. This system is anti-lock braking system (ABS) ready. STEERTEK is compatible with most industry standard wheel ends and brakes, contact the vehicle manufacturer for more information.
5. The STEERTEK axle product identification is etched on the center front of the axle beam, providing the following information:
   - Axle part number: Identifies the features of the axle beam.
   - Axle assembly number: Identifies the complete assembly, which includes the steering knuckles and axle mounts.

FIGURE 2-2 Front view of STEERTEK axle showing approximate location of product identification etched into Axle Beam.

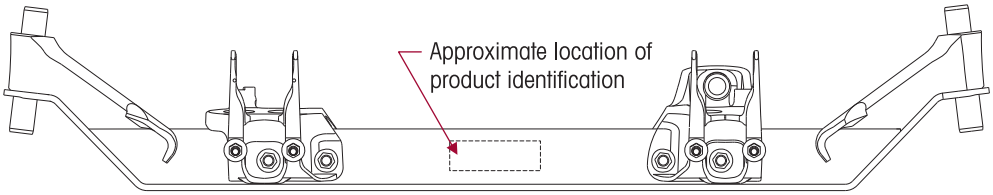

SECTION 3
Important Safety Notice

Proper maintenance, service and repair are important to the reliable operation of the axle. The procedures recommended by Hendrickson and described in this technical publication are methods of performing such maintenance, service and repair.

The warnings and cautions should be read carefully to help prevent personal injury and to assure that proper methods are used. Improper maintenance, service or repair may damage the vehicle, cause personal injury, render the vehicle unsafe in operation, or void the manufacturer's warranty.

Failure to follow the safety precautions in this manual can result in personal injury and/or property damage. Carefully read and understand all safety related information within this publication, on all decals and in all such materials provided by the vehicle manufacturer before conducting any maintenance, service or repair.

EXPLANATION OF SIGNAL WORDS

Hazard "Signal Words" (Danger-Warning-Caution) appear in various locations throughout this publication. Information accented by one of these signal words must be observed to help minimize the risk of personal injury to service personnel, or possibility of improper service methods which may damage the vehicle or render it unsafe.

This is the safety alert symbol. It is used to alert you to potential personal injury hazards. Obey all safety messages that follow this symbol to avoid possible injury or death.

Additional 'Notes' or 'Service Hints' are utilized to emphasize areas of procedural importance and provide suggestions for ease of repair. The following definitions indicate the use of these signal words as they appear throughout the publication.

DANGER — INDICATES AN IMMINENTLY HAZARDOUS SITUATION WHICH, IF NOT AVOIDED, WILL RESULT IN SERIOUS INJURY OR DEATH.

WARNING — INDICATES A POTENTIAL HAZARDOUS SITUATION WHICH, IF NOT AVOIDED, CAN RESULT IN SERIOUS INJURY OR DEATH.

CAUTION — INDICATES A POTENTIAL HAZARDOUS SITUATION WHICH, IF NOT AVOIDED, MAY RESULT IN MINOR OR MODERATE INJURY, OR PROPERTY DAMAGE.

NOTE — An operating procedure, practice condition, etc. which is essential to emphasize.

SERVICE HINT — A helpful suggestion, which will make the servicing being performed a little easier and/or faster.

Also note that particular service operations may require the use of special tools designed for specific purposes. These special tools can be found in the Special Tools Section of this publication.

SAFETY PRECAUTIONS

WARNING

FASTENERS

LOOSE OR OVER TORQUED FASTENERS CAN CAUSE COMPONENT DAMAGE, LOSS OF VEHICLE CONTROL, PROPERTY DAMAGE, OR SEVERE PERSONAL INJURY. MAINTAIN CORRECT TORQUE VALUE AT ALL TIMES. CHECK TORQUE VALUES ON A REGULAR BASIS AS SPECIFIED.

WARNING

LOAD CAPACITY

ADHERE TO THE PUBLISHED CAPACITY RATINGS FOR THE AXLE. ADD-ON AXLE ATTACHMENTS (I.E. SLIDING FIFTH WHEELS) AND OTHER LOAD TRANSFERRING DEVICES CAN INCREASE THE SUSPENSION LOAD ABOVE THE RATED AND APPROVED CAPACITIES WHICH COULD RESULT IN FAILURE AND LOSS OF VEHICLE CONTROL, POSSIBLY CAUSING PERSONAL INJURY OR PROPERTY DAMAGE.

WARNING

MODIFYING COMPONENTS

DO NOT MODIFY OR REWORK PARTS WITHOUT AUTHORIZATION FROM HENDRICKSON. DO NOT USE SUBSTITUTE COMPONENTS NOT AUTHORIZED BY HENDRICKSON. USE OF MODIFIED, REWORKED, SUBSTITUTE, OR REPLACEMENT PARTS NOT AUTHORIZED BY HENDRICKSON MAY NOT MEET HENDRICKSON'S SPECIFICATIONS, AND CAN RESULT IN FAILURE OF THE PART, LOSS OF VEHICLE CONTROL, AND POSSIBLE PERSONAL INJURY OR PROPERTY DAMAGE. USE ONLY HENDRICKSON AUTHORIZED REPLACEMENT PARTS.

WARNING

OFF ROADWAY TOWING

WHEN A VEHICLE IS DISABLED AND EQUIPPED WITH A STEERTEK AXLE, CARE MUST BE TAKEN TO ENSURE THERE IS NO DAMAGE TO THE AXLE WHEN TOWING THE VEHICLE. THE USE OF TOW STRAPS IS NECESSARY TO TOW A DISABLED VEHICLE INTO A REPAIR FACILITY PARKING LOT INTO THE SHOP BAY. THE TOW STRAPS SHOULD BE CONNECTED TO THE TOW HOOKS PROVIDED BY THE MANUFACTURER AT THE FRONT OF THE BUMPER. IF THE USE OF TOW HOOKS IS NOT AN OPTION, THEN TOW STRAPS MAY BE WRAPPED AROUND THE FRONT AXLE (SEE FIGURE 3-1) IN A MANNER THAT IS ACCEPTABLE FOR TOWING THE VEHICLE FROM A REPAIR FACILITY PARKING LOT INTO THE SHOP BAY. DO NOT USE A TOW CHAIN AROUND THE FRONT AXLE OR WITH A SINGLE POINT LOCATION TO TOW THE VEHICLE, DOING SO WILL DAMAGE THE AXLE, SEE FIGURE 3-2, FOR DETAILED TOWING INSTRUCTIONS FOR ON-HIGHWAY TOWING SEE SECTION 6.

FIGURE 3-1 ACCEPTABLE

FIGURE 3-2 NOT ACCEPTABLE

WARNING

SUPPORT THE VEHICLE PRIOR TO SERVICING

PLACE THE VEHICLE ON A LEVEL FLOOR AND CHOCK THE WHEELS TO HELP PREVENT THE VEHICLE FROM MOVING. SUPPORT A RAISED VEHICLE WITH SAFETY STANDS. DO NOT WORK UNDER A RAISED VEHICLE SUPPORTED ONLY BY A FLOOR JACK. A JACK CAN SLIP OR FALL OVER. SERIOUS PERSONAL INJURY CAN RESULT.

WARNING

AXLE CAMBER

AXLE CAMBER IS NOT ADJUSTABLE. DO NOT CHANGE THE AXLE CAMBER ANGLE OR BEND THE AXLE BEAM. BENDING THE AXLE BEAM (SEE FIGURE 3-3) TO CHANGE THE CAMBER ANGLE WILL DAMAGE THE AXLE AND REDUCE AXLE STRENGTH, AND WILL VOID HENDRICKSON'S WARRANTY. A BENT AXLE BEAM CAN CAUSE LOSS OF VEHICLE CONTROL, POSSIBLY CAUSING PERSONAL INJURY OR PROPERTY DAMAGE.

FIGURE 3-3

REPLACE ANY SAFETY DECALS THAT ARE FADED, TORN, MISSING, ILLEGIBLE, OR OTHERWISE DAMAGED. CONTACT HENDRICKSON TO ORDER REPLACEMENT LABELS.

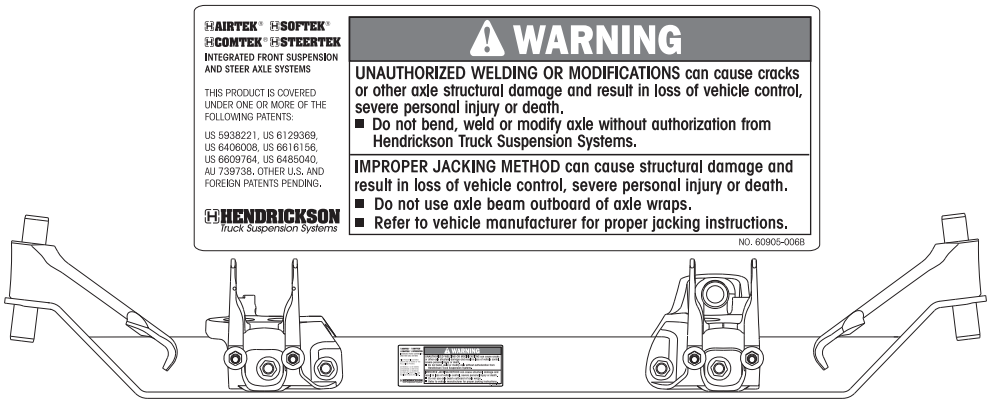

WARNING

AXLE

STEERTEK IS A UNIQUE AXLE, IN THAT THE KINGPIN IS CRYOGENICALLY INSTALLED IN THE AXLE. THE KINGPIN IS A NON-REPLACEABLE COMPONENT OF THE AXLE ASSEMBLY. DO NOT TRY TO REMOVE THE KINGPIN. IF THE KINGPIN SHOWS SIGNS OF MOVEMENT, CONTACT THE HENDRICKSON TECH SERVICES DEPARTMENT.

THE STEERTEK AXLE FOR INTERNATIONAL TRUCK MULTILINK FAS HAS UNIQUE AXLE BRACKETS WHICH ARE NON-SERVICEABLE. THE FASTENERS USED TO SECURE THE AXLE BRACKET TO THE AXLE ARE ALSO NON-SERVICEABLE. LOOSE OR DAMAGED AXLE BRACKETS REQUIRE REPLACEMENT OF THE ENTIRE AXLE ASSEMBLY. THE AXLE BRACKETS AND FASTENERS ARE INCLUDED IN THE AXLE ASSEMBLY AND ARE NOT SOLD SEPARATELY. IMPROPER REPLACEMENT CAN DAMAGED COMPONENTS AND CAN CAUSE LOSS OF VEHICLE CONTROL, POSSIBLE PERSONAL INJURY, DEATH, OR PROPERTY DAMAGE AND WILL VOID APPLICABLE WARRANTIES.

THE REPAIR OR RECONDITIONING OF AXLE COMPONENTS IS NOT ALLOWED AS SHOWN ON LABEL IN FIGURE 3-3. ANY AXLE COMPONENTS FOUND TO BE DAMAGED OR OUT OF SPECIFICATIONS MUST BE REPLACED. ALL MAJOR HENDRICKSON COMPONENTS ARE HEAT TREATED AND TEMPERED. STEERTEK COMPONENTS CANNOT BE BENT, WELDED, HEATED, OR REPAIRED WITHOUT REDUCING THE STRENGTH OR LIFE OF THE COMPONENT. FAILURE TO FOLLOW THESE GUIDELINES CAN CAUSE LOSS OF VEHICLE CONTROL, POSSIBLE PERSONAL INJURY, DEATH, OR PROPERTY DAMAGE AND WILL VOID APPLICABLE WARRANTIES.

WARNING

AIR SPRINGS

CAREFULLY READ AND UNDERSTAND ANY/ALL INSTRUCTIONS AND SAFETY RELATED INFORMATION PROVIDED BY THE VEHICLE MANUFACTURER REGARDING THE PROPER DEFLATION, INFLATION, AND INSTALLATION OF AIR SPRING ASSEMBLIES FOR THE MULTILINK FAS BEFORE CONDUCTING ANY MAINTENANCE, SERVICE OR REPAIR ON THE STEERTEK AXLE.

WARNING

DAMAGED COMPONENTS

IF A VEHICLE EQUIPPED WITH A STEERTEK AXLE IS INVOLVED IN A CRASH, A THOROUGH INSPECTION OF THE AXLE MUST BE PERFORMED NOTING THE CONDITION OF THE AXLE BEAM, KINGPINS, AND KNUCKLE ASSEMBLIES. IF ANY COMPONENT APPEARS DAMAGED, THE AXLE MUST BE REPLACED. IN THE EVENT THE CRASH RESULTED IN EXCESSIVE SIDE LOAD, SUCH AS A BENT WHEEL, HUB, OR SPINDLE, IT IS STRONGLY RECOMMENDED TO REPLACE THE COMPLETE AXLE ASSEMBLY, CONTACT HENDRICKSON TECHNICAL SERVICES WITH ANY QUESTIONS. FAILURE TO REPLACE ANY DAMAGED COMPONENTS CAN CAUSE LOSS OF VEHICLE CONTROL, POSSIBLE PERSONAL INJURY, DEATH, OR PROPERTY DAMAGE AND WILL VOID APPLICABLE WARRANTIES.

WARNING

PERSONNEL PROTECTIVE EQUIPMENT

ALWAYS WEAR PROPER EYE PROTECTION AND OTHER REQUIRED PERSONAL PROTECTIVE EQUIPMENT TO HELP PREVENT PERSONAL INJURY WHEN PERFORMING VEHICLE MAINTENANCE, REPAIR OR SERVICE.

WARNING

TORCH/WELDING

DO NOT USE A CUTTING TORCH TO REMOVE ANY FASTENERS. THE USE OF HEAT ON AXLE COMPONENTS WILL ADVERSELY AFFECT THE STRENGTH OF THESE PARTS. A COMPONENT DAMAGED IN THIS MANNER CAN RESULT IN THE LOSS OF VEHICLE CONTROL AND POSSIBLE PERSONAL INJURY OR PROPERTY DAMAGE.

EXERCISE EXTREME CARE WHEN HANDLING OR PERFORMING MAINTENANCE IN THE AREA OF THE AXLE. DO NOT CONNECT ARC WELDING GROUND LINE TO THE AXLE. DO NOT STRIKE AN ARC WITH THE ELECTRODE ON THE AXLE. DO NOT USE HEAT NEAR THE AXLE. DO NOT NICK OR GOUGE THE AXLE. SUCH IMPROPER ACTIONS CAN DAMAGE THE AXLE, AND CAN CAUSE LOSS OF VEHICLE CONTROL AND POSSIBLE PERSONAL INJURY OR PROPERTY DAMAGE.

CAUTION

PROCEDURES AND TOOLS

A MECHANIC USING A SERVICE PROCEDURE OR TOOL WHICH HAS NOT BEEN RECOMMENDED BY HENDRICKSON MUST FIRST SATISFY HIMSELF THAT NEITHER HIS SAFETY NOR THE VEHICLE'S SAFETY WILL BE JEOPARDIZED BY THE METHOD OR TOOL SELECTED. INDIVIDUALS DEVIATING IN ANY MANNER FROM THE INSTRUCTIONS PROVIDED ASSUME ALL RISKS OF CONSEQUENTIAL PERSONAL INJURY OR DAMAGE TO EQUIPMENT INVOLVED.

WARNING

PARTS CLEANING

SOLVENT CLEANERS CAN BE FLAMMABLE, POISONOUS AND CAUSE BURNS. TO HELP AVOID SERIOUS PERSONAL INJURY, CAREFULLY FOLLOW THE MANUFACTURER'S PRODUCT INSTRUCTIONS AND GUIDELINES AND THE FOLLOWING PROCEDURE:

1. WEAR PROPER EYE PROTECTION.
2. WEAR CLOTHING THAT PROTECTS YOUR SKIN.
3. WORK IN A WELL VENTILATED AREA.
4. DO NOT USE GASOLINE, OR SOLVENTS THAT CONTAIN GASOLINE. GASOLINE CAN EXPLODE.
5. HOT SOLUTION TANKS OR ALKALINE SOLUTIONS MUST BE USED CORRECTLY. FOLLOW THE MANUFACTURER'S RECOMMENDED INSTRUCTIONS AND GUIDELINES CAREFULLY TO HELP PREVENT PERSONAL ACCIDENT OR INJURY.

DO NOT USE HOT SOLUTION TANKS OR WATER AND ALKALINE SOLUTIONS TO CLEAN GROUND OR POLISHED PARTS. DOING SO WILL CAUSE DAMAGE TO THE PARTS AND VOID WARRANTY.

SECTION 4
Parts List

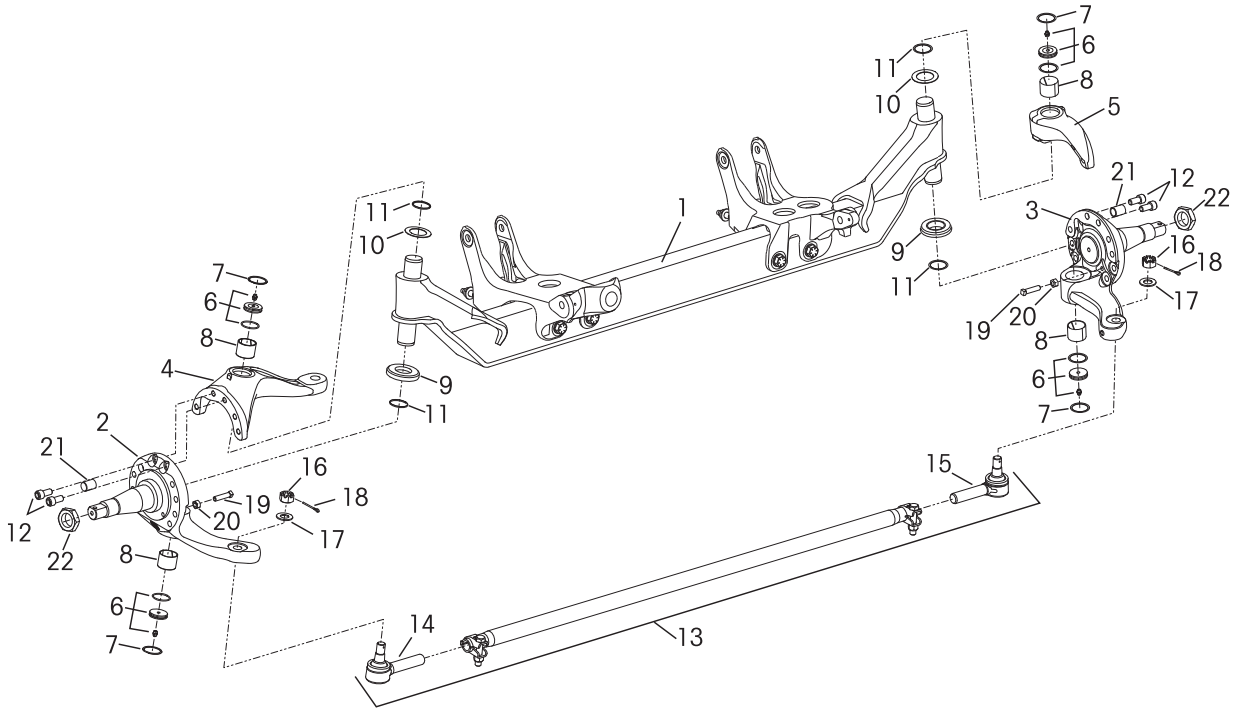

KEY NO.	PART NO.	DESCRIPTION	NO. REQ.
1	66906-002	*Axle & Kingpin Assembly with Axle Brackets 12K, 4.25 Drop, 70.9 KPI, *Replaces 66906-001*	1
2		LH Lower Steering Knuckle Assembly	1
	58900-075	<200 Ackermann, Short Wheel Base	
	58900-073	>200 Ackermann, Long Wheel Base	
3		RH Lower Steering Knuckle Assembly	1
	58900-076	<200 Ackermann, Short Wheel Base	
	58900-074	>200 Ackermann, Long Wheel Base	
4		LH Upper Steering Knuckle Assembly	1
	60903-042	Pro Star Vehicles	
	60903-056	Lone Star Vehicles	
5	60904-034	RH Upper Steering Knuckle Assembly	1
	60961-039	**Kingpin Bushing w/Roller Thrust Bearing Service Kit, One Side,** Includes Key Nos. 6-12, Loctite	
	60961-042	**Roller Thrust Bearing Service Kit,** Includes Key Nos. 9-12, Loctite	
6	59156-000	Grease Cap Assembly	4
7	58937-000	Retaining Ring	4
8	58909-000	Kingpin Bushing	4
9	64256-000	Roller Thrust Bearing	2
10	60259-002	Kingpin Shim 0.047"	2
Not Shown	60259-001	Kingpin Shim 0.005" (May be needed for service)	

KEY NO.	PART NO.	DESCRIPTION	NO. REQ.
11	58910-000	Kingpin Seal	4
12	60236-001	⅝"-11 UNC Socket Head Cap Screw	4
Not Shown	60937-000	Loctite (Red) Compound Tube	1
13		Tie Rod Assembly 12K, 4.25 Drop, 70.9 KPI, 8.35" Ride Ht., Includes Key Nos. 14-16	1
	60239-001	<200 Ackermann, Short Wheel Base	
	60239-002	>200 Ackermann, Long Wheel Base	
	60961-010	**Tie Rod End Service Kit, Axle Set,** Includes Kit Nos. 60961-025 & -026	
	60961-025	**LH Tie Rod End Service Kit**, Includes Key Nos. 14, 16-18	
	60961-026	**RH Tie Rod End Service Kit**, Includes Key Nos. 15-18	
14	64000-001	LH Tie Rod End	1
15	64000-002	RH Tie Rod End	1
16		**⅞" Castle Nut	2
17	22962-007	⅞" Flat Washer	2
18	17800-004	Cotter Pin	2
19	60238-001	½"-13 UNC Square Head Bolt	2
20	60240-000	½"-13 UNC Hex Jam Nut	2
21	64246-000	ABS Sensor Sleeve	2
22	64578-000	1½"-12 UNF Inner Wheel Bearing Adj. Nut	2

NOTE:

* New air springs will be required when replacing the axle assembly, use International Truck's new air spring Part No. 3627997C2 (replaces Part No. 362797C1).

** Item included in assembly only, part not sold separately.

SECTION 5

Recommended Towing Procedures

ON HIGHWAY AND ON ROADWAY

Hendrickson recommends that a vehicle equipped with a STEERTEK axle be towed by the following methods (listed in order of preference) for ON HIGHWAY or ON ROADWAY applications.

1. Wheel lift method, the ideal towing procedure
2. Towing the vehicle from the rear method
3. Conventional axle fork method

Please read, understand and comply with any additional towing instructions and safety precautions that may be provided by the vehicle manufacturer.

Hendrickson will not be responsible for any damage to the axle or other vehicle components resulting from any towing method or fixture not authorized by Hendrickson.

Please contact Hendrickson Tech Services at 630.910.2800 or send email to: techservices@hendrickson-intl.com with any questions regarding proper towing procedures for vehicles equipped with a STEERTEK axle.

WHEEL LIFT METHOD—IDEAL

This method provides the greatest ease for towing the vehicle. Lifting at the tires helps reduce the risk of possible damage to the axle and engine components during towing operations, see Figure 6-1.

FIGURE 6-1 Wheel lift method

TOWING VEHICLE FROM THE REAR METHOD

This method is preferred when the proper equipment is not available to perform the wheel lift method and is necessary for wreckers not equipped with an under lift system.

AXLE FORK LIFT METHOD

This is an alternative method for towing the vehicle, but requires standard 5" forks, see Figure 6-2, and designated lift points between the axle seats. The following procedure must be used:

- Place a spacer on the boom, to provide adequate clearance between the oil pan and the boom if necessary. Lift the vehicle in order to place spacer under tires. This will provide sufficient room under the axle to locate forks in the proper position.
- Install the fork in the boom properly.
- Position the tow forks directly under the axle, between the axle seats as shown in Figure 6-2.

FIGURE 6-2 Proper tow fork location on inside axle seats on the STEERTEK axle

- Prior to lifting the vehicle, ensure that the bottom axle plate is flat in the tow fork to minimize any gap between the bottom axle plate and the tow fork, see Figures 6-3 and 6-4. It may be necessary to deflate the air in the steer axle suspension, and/or release the tractor brakes. Deflate the steer axle air springs by disconnecting the height control valve linkage and lowering the height control valve linkage arm. This will exhaust the air pressure in the steer axle air springs.

FIGURE 6-3 Without Gap

FIGURE 6-4 With Gap

NOTE

When lifting a vehicle with an under lift boom, care must be taken not to damage the engine's oil pan. Vehicles equipped with a front fairing may require removal of the front fairing prior to towing to prevent component damage.

- Lift vehicle and secure the vehicle to the boom.
- Install safety straps, it is preferred to use nylon safety straps. Chains have a tendency to bind and may cause damage to the axle.

OFF ROADWAY TOWING

WARNING

WHEN A VEHICLE IS DISABLED AND EQUIPPED WITH A STEERTEK AXLE, CARE MUST BE TAKEN TO ENSURE THERE IS NO DAMAGE TO THE AXLE WHEN TOWING THE VEHICLE. THE USE OF TOW STRAPS IS NECESSARY TO TOW A DISABLED VEHICLE INTO A REPAIR FACILITY. THE TOW STRAPS SHOULD BE CONNECTED TO THE TOW HOOKS PROVIDED BY THE VEHICLE MANUFACTURER AT THE FRONT OF THE BUMPER. IF THE USE OF TOW HOOKS IS NOT AN OPTION, THEN TOW STRAPS MAY BE WRAPPED AROUND THE FRONT AXLE, (SEE FIGURE 6-5) IN A MANNER THAT IS ACCEPTABLE FOR TOWING THE VEHICLE FROM A REPAIR FACILITY PARKING LOT INTO THE SHOP BAY. DO NOT USE A TOW CHAIN AROUND THE FRONT AXLE TO TOW THE VEHICLE, DOING SO WILL DAMAGE THE AXLE AND VOID WARRANTY, (SEE FIGURE 6-6).

THE FOLLOWING METHODS ARE NOT RECOMMENDED FOR:
ON HIGHWAY OR ON ROADWAY TOWING

FIGURE 6-5

NYLON STRAPS ARE ACCEPTABLE FOR OFF ROADWAY TOWING

FIGURE 6-6

CHAINS ARE NOT ACCEPTABLE FOR OFF ROADWAY TOWING

SECTION 6
Special Tools

These shop made tools are designed to install and remove kingpin bushings. Bushing tools are made from cold rolled steel or equivalent. Drawings are for reference only. Hendrickson does not supply these tools.

KINGPIN BUSHING TOOLS

Kingpin Bushing Installer

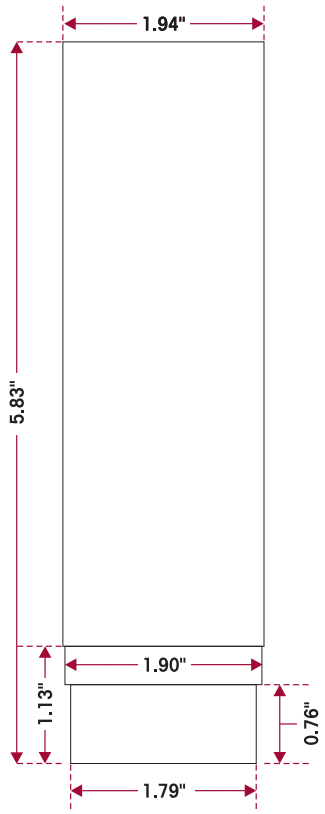

Kingpin Bushing Remover

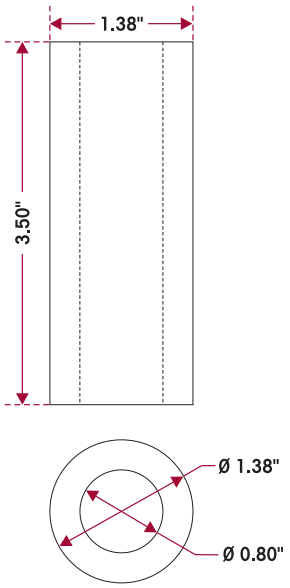

Steering Arm Receiver

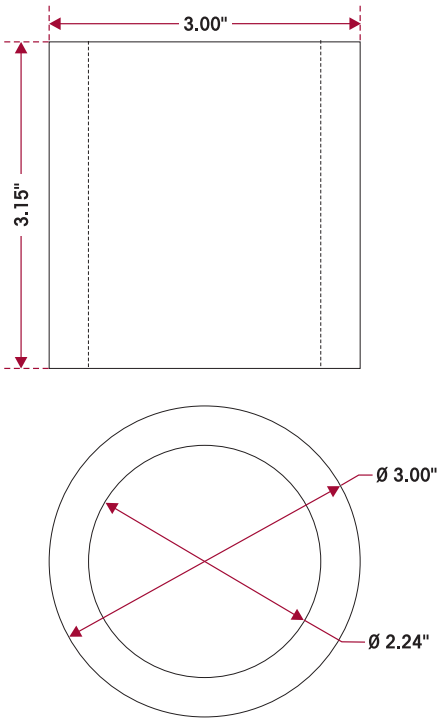

ADJUSTABLE STRAIGHT FLUTE REAMER

The dimension of cutting diameter must facilitate a range of 1.802" – 1.812"

SECTION 7

Preventive Maintenance

VISUAL INSPECTION

The STEERTEK is a low maintenance axle. However it is necessary to visually inspect the following items every six months or 50,000 miles (80,450 km), whichever comes first, to help ensure all such components function to their highest efficiency. Visual inspection must include the following items and other components referenced in this section.

- **Fasteners** — Look for any loose or damaged fasteners on the entire axle. Make sure all fasteners are tightened to the specified torque. Refer to Tightening Torque Specifications section of this publication. Use a calibrated torque wrench to check torque in a tightening direction. As soon as the fastener starts to move, record the torque. Correct the torque if necessary. Replace any worn or damaged fasteners.
- **Operation** — All steering components must move freely through the full range of motion from axle stop to axle stop.
- **Steering pivot points** — Check for looseness at all pivot points. Inspect and lubricate all pivot points, maximum service interval is 25,000 miles. Refer to the Troubleshooting Guide Section of this publication.
- **STEERTEK axle** — The axle should be free of any nicks or gouges. Inspect for any cracks or dents on axle.
- **Tire wear** — Inspect tires for wear patterns that may indicate suspension damage or misalignment. See Tire Inspection in this section.
- **Wear and damage** — Inspect all parts of axle for wear and damage. Look for bent or cracked parts. Replace all worn or damaged parts.

See vehicle manufacturer's applicable publications for other preventive maintenance requirements.

LUBRICATION INTERVALS

For vehicles equipped with the STEERTEK axle, regular lubrication intervals should be followed to help prevent premature wear to the kingpin bushings and tie rod ends, see lubrication chart below.

STEERTEK GREASING AND LUBRICATION SPECIFICATIONS

Component	Greasing Interval	Grease	NLGI Grade	Outside Temperature
Kingpin Bushings	Maximum of 25,000 miles (40,225 kilometers) or 90 days, whichever comes first.	Multipurpose Grease	2	Refer to the lubricant manufacturer's specifications for the temperature service limits applicable to your area.
Tie Rod Ends				
Drag Link	See Vehicle Manufacturer			

NOTE: Lubrication greases acceptable for use on the STEERTEK axle will carry a designation of NLGI #2 EP and rated GC-LB or equivalent.

KINGPIN LUBRICATION

On the Hendrickson STEERTEK front axle, the kingpin grease fittings are located on the top and bottom of the kingpin grease caps.

FIGURE 7-1

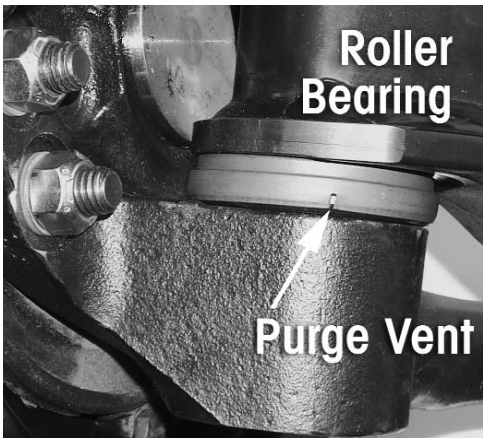

1. Place vehicle on the ground.
2. Prior to greasing the kingpins on the vehicle, the front suspension must be in a loaded condition.
3. Clean off all the grease fittings and grease gun tip with a clean shop towel prior to lubrication.
4. Lubricate the kingpins through the grease fittings on the top and bottom of the steering knuckle, see Lubrication Specification Matrix above.
5. Force the required lubricant into the upper and lower kingpin grease fittings, until new lubricant flows from the upper axle beam and knuckle and the thrust bearing purge location, see Figure 7-1.

NOTE Greasing at the lower zerk should purge grease from the thrust bearing shell.

TIE ROD END LUBRICATION

LUBRICATION PROCEDURE

1. Turn the vehicle wheels straight ahead.
2. Wipe the zerk fitting and grease gun tip clean with shop towels.
3. Wipe the seal/boot clean with shop towels.
4. Attach a grease gun to the zerk fitting. Either a hand or pneumatic grease gun is acceptable. If air operated grease gun is used, system air pressure should not exceed 150 psi (1035 kPa).

FIGURE 7-2

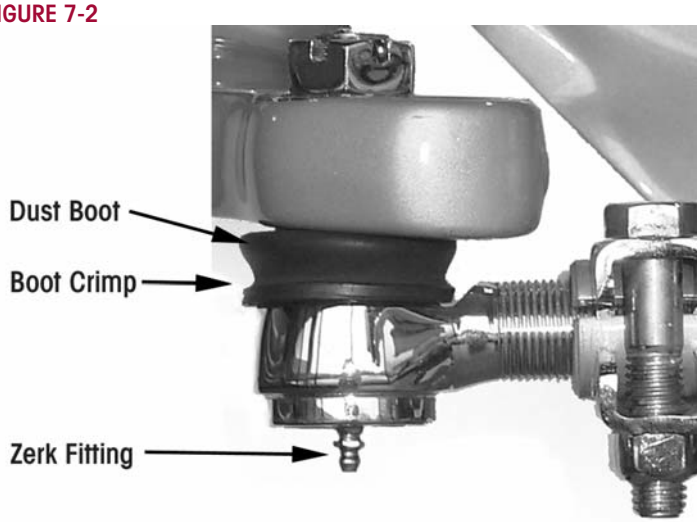

CAUTION EXCEEDING THE MAXIMUM AIR PRESSURE TO THE ZERK FITTING CAN CAUSE DAMAGE TO THE DUST BOOT CAUSING COMPONENT FAILURE.

5. Dirt, water, and discolored old grease should flow from the relief vents or purge holes near the boot crimp or bellows area, see Figure 7-2. Continue to purge grease until fresh grease flows from the purge area.
6. If the tie rod end is designed for lube service and it will not accept grease proceed as follows:
   a. Remove the zerk fitting
   b. Inspect the threaded zerk fitting hole in the tie rod end and remove any obstructions
   c. Install a new zerk fitting
   d. Continue the lubrication procedure
   e. If the tie rod end will not accept grease following this procedure it will be necessary to replace the tie rod end, (see Tie Rod End replacement in the Component Replacement Section of this publication)
7. Apply grease until all the old grease is purged from the boot.

TIE ROD END INSPECTION

INSPECTION PROCEDURE

Before beginning this inspection procedure, the entire system must be unloaded (i.e., the front end of the vehicle must be raised and supported with safety stands).

CAUTION

DO NOT GREASE THE TIE ROD ASSEMBLY BEFORE PERFORMING THE INSPECTION. DOING SO CAN INHIBIT EFFORTS TO DETERMINE ACTUAL WEAR.

CAUTION

REPLACE THE ENTIRE TIE ROD END IF THE BOOT IS TORN OR MISSING, FAILURE TO DO SO CAN CAUSE PREMATURE WEAR OF THE TIE ROD END.

1. Block rear wheels of vehicle. Using the bottom of the axle beam or the frame rails, raise the front end off the ground and support with stands.
2. With the engine off, turn the wheels from full left to full right and then return to the straight-ahead position.
3. Check that the boots are in place and completely installed over the tie rod ends.
4. Check for cracking or tears in the boots. Also check the boot seals for damage. Replace the entire tie rod end if the boot is damaged.

WARNING

THE CORRECT COTTER PIN MUST BE INSTALLED THROUGH THE TIE ROD END WITH THE CASTLE NUT TIGHTENED TO TORQUE SPECIFICATION IN ORDER TO SECURELY ATTACH THE TIE ROD. LOSS OF THE COTTER PIN CAN CAUSE THE TIE ROD END NUT TO BECOME LOOSE AND ADVERSELY AFFECT VEHICLE STEERING AND POSSIBLY RESULT IN TOTAL LOSS OF STEERING CONTROL.

5. Check that the tie rod end nut is installed and secured with a cotter pin. If the cotter pin is missing, check the nut torque specification and then install a new cotter pin. Always tighten the castle nut to specified torque when setting the cotter pin. Do not back off the nut to insert cotter pin.

FIGURE 7-3

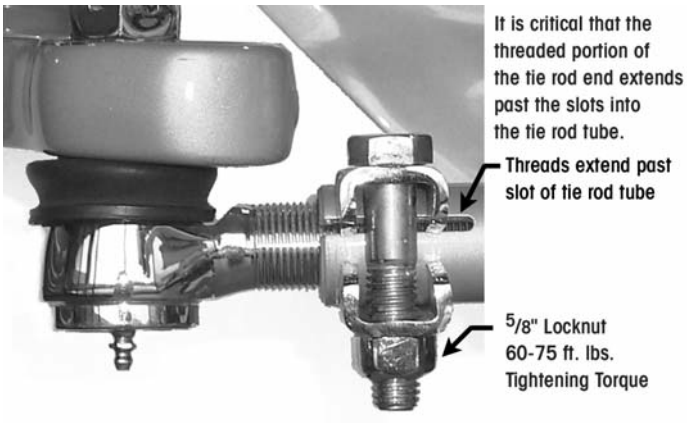

6. Check that the tie rod end is threaded correctly into the cross tube and is engaged deeper than the end of the cross tube slot. The tie rod end must be visible the entire length of the cross tube slot, see Figure 7-3.
7. Check that zerk fittings are installed. Replace a damaged zerk fitting with a new one.

CAUTION

DO NOT USE THE FOLLOWING ITEMS OR METHODS TO CHECK FOR MOVEMENT OF THE TIE ROD ASSEMBLY. DAMAGE TO COMPONENTS CAN RESULT IF:

- A CROW BAR, PICKLE FORK OR 2 x 4 ARE USED
- ANYTHING OTHER THAN HANDS USED TO GRASP THE CROSS TUBE ASSEMBLY (CAN RESULT IN DAMAGE TO THE CROSS TUBE).
- EXCESSIVE PRESSURE OR FORCE IS APPLIED TO THE TIE ROD ENDS OR THE JOINTS OF THE ASSEMBLY.

8. By hand or using a pipe wrench, with jaw protectors to avoid gouging the cross tube, rotate the cross tube toward the front of the vehicle and then toward the rear. After rotating, center the cross tube. If the cross tube will not rotate in either direction, replace both tie rod ends, see Figure 7-4.

FIGURE 7-4

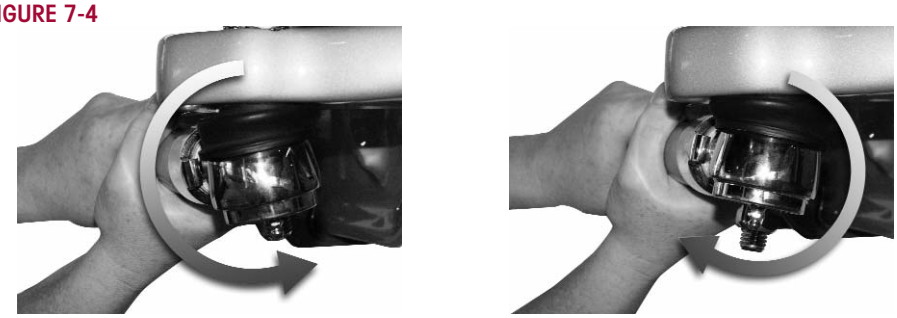

9. Position yourself directly below the tie rod end. Using both hands, grab the assembly end as close to the tie rod end as possible (no more than 6" or 152.4mm). Apply hand pressure with reasonable human effort vertically up and down in a push-pull motion several times (using approx. 50-100 pounds of force). Check for any movement or looseness at both tie rod end locations, see Figure 7-5.

FIGURE 7-5

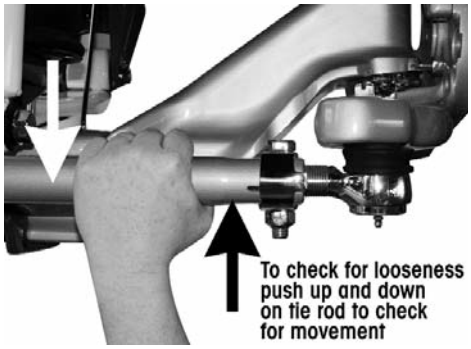

FIGURE 7-6

10. If there is any movement in the tie rod assembly, install a magnetic based dial indicator on the Ackermann arm, see Figure 7-6.
11. Set the dial indicator to zero.
12. Apply hand pressure with reasonable human effort vertically up and down in a push-pull motion several times (using approx. 50-100 lbs. of force). Observe the reading on the dial indicator.
13. If the reading is more than 0.060", replace both tie rod ends at the next service interval.
14. If a tie rod end exhibits 0.125" of movement by hand, the vehicle should be removed immediately from use and the tie rod end be replaced.

NOTE

According to the Commercial Vehicle Safety Alliance (CVSA), the vehicle "out of service" criteria is: Any motion other than rotational between any linkage member and its attachment point of more than ⅛" (3mm), measured with hand pressure only. (393.209(d)), (published in the North American Standard Out-of-Service Criteria Handbook, April 1, 2006.)

TIRE INSPECTION

The leading causes of tire wear are the following, in order of importance:

1. Tire Pressure
2. Toe Setting
3. Thrust Angle
4. Camber

The following tire Inspection guidelines are based upon TMC (Technology and Maintenance Council) recommended practices. Any issues regarding irregular tire wear where Hendrickson is asked for assistance, will require tire and alignment maintenance records as described in the TMC literature numbers RP219A, RP230, or RP 642.

Tire wear is normally the best indicator of vehicle alignment condition. If tires are wearing too rapidly or irregularly, alignment corrections may be needed. The tire wear patterns described below can help isolate specific alignment problems.

The most common conditions of concern are:

- Overall Fast Wear (Miles per 32nd)
- Feather Wear
- Cupping
- Diagonal Wear
- Rapid Shoulder Wear (One Shoulder Only)
- One-Sided Wear

FIGURE 7-7

OVERALL FAST WEAR
(Miles per 32nd)

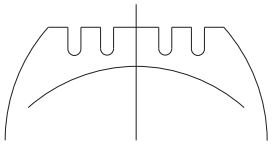

Overall Fast Wear — Fast wear can be described as exhibiting a good, but accelerated wear pattern. It is typically caused by operating conditions, such as mountainous terrain, frequency and severity of turning, abrasive road surfaces in combination with vehicle configurations and their attributes-such as power steering, heavy axle loads, high wheel cuts, setback axles, short wheel base tractors, long wheel base straight trucks. To correct this problem, consult with vehicle and tire manufacturers when specifying equipment or replacing tires. For more information, see TMC RP 219A publication, page 11. For information on how to accurately measure and record tire rates, see TMC RP 230 publication.

FIGURE 7-8

FEATHER WEAR

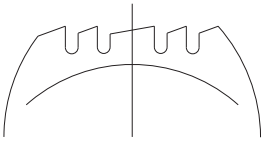

Feather wear — Tread ribs or blocks worn so that one side is higher than the other resulting in step-offs across the tread face. Generally, ribs or blocks exhibit this wear. To spot this problem, do the following:

With one hand flat on the tread of the tire and a firm down pressure, slide your hand across the tread of the tire. In one direction, the tire will feel smooth and in the opposite direction there will be a sharp edge to the tread. Typical causes of feather wear include: excessive side force scrubbing, resulting from conditions of misalignment such as excessive toe, drive axle misalignment, worn, missing or damaged suspension components, bent tie rods or other chassis misalignment.

To correct this problem, tires can be rotated to another axle for maximum utilization of remaining tread. Additionally, diagnose the vehicle itself and correct misalignment condition as required. If steer tire feathers are in opposite directions, an improper toe condition is most likely the cause. For more information, see TMC RP 219A publication, page 5.

If feather wear on both steer tires is in the same direction, drive axle or other chassis misalignment is indicated. If one steer tire shows feather wear and the other steer tire has normal wear, a combination of toe and drive axle or chassis misalignment is indicated.

FIGURE 7-9

CUPPING

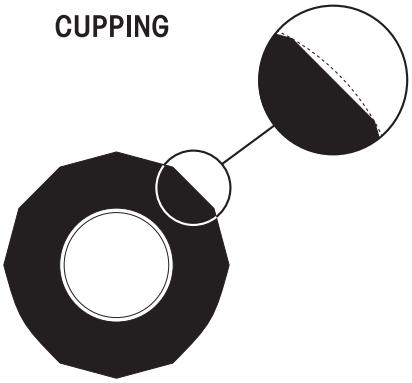

Cupping — Localized, dished out areas of fast wear creating a scalloped appearance around the tire. Cupping, which appears around the tire on the shoulder ribs, may also progress to adjoining ribs, see TMC RP 219A publication, page 7.

Cupping is usually a result of moderate-to-severe imbalance, improper rim/wheel mounting, excessive wheel end play or other assembly non-uniformity. It can also be due to lack of shock absorber control on some suspension types.

To solve cupping problems:

- *Tires* – Correct mismount or balance problem. If ride complaints arise, steer tires may be rotated to drive or trailer axle.
- *Vehicle* – Diagnose component imbalance condition, i.e., wheel, rim, hub, brake, drum. Correct as necessary.

FIGURE 7-10

DIAGONAL WEAR

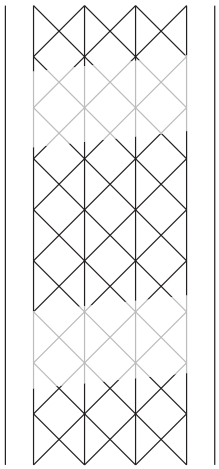

Diagonal Wear — Can be described as localized flat spots worn diagonally across the tread at approximately 25-35° angles, often repeating around the tread circumference. For more information, see TMC RP 219A publication, page 20.

Diagonal wear is usually caused by bad wheel bearings, toe out, mismounting of tire and wheel assembly to axle, and mismatched duals for size and/or inflation pressures. It may start as brake skid. Diagonal wear is aggravated by high speed empty or light load hauls.

To correct diagonal wear, reverse direction of rotation of the tire. If wear is excessive, true tire. If the source of trouble is the vehicle, diagnose cause and correct as needed.

FIGURE 7-11

RAPID SHOULDER WEAR (One Shoulder Only)

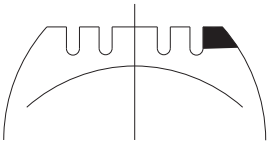

Rapid Shoulder Wear (One Shoulder Only) — Is defined as a tire worn on the edge of one shoulder, sometimes extending to inner ribs. It can progress to diagonal wipeout. For more information, see TMC RP 219A publication, page 22.

This wear condition is usually caused by excessive toe or excessive camber. These conditions can be created by a misaligned or bent axle and can also be caused by loose or worn wheel bearings.

To correct this type of rapid shoulder wear:

- *Tires* – Change direction of rotation of tire. If shoulder wear is severe, remove and retread.
- *Vehicle* – Diagnose misalignment and/or mechanical condition and correct.

FIGURE 7-12

ONE-SIDED WEAR

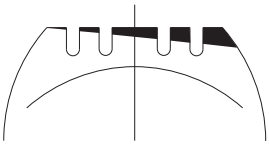

One-sided wear — Is excessive wear on one side of tire extending from the shoulder towards the center of the tread. For more information, see TMC RP 219A, page 26.

One-sided wear is usually caused by improper alignment, worn kingpins, loose wheel bearings, excessive camber, excessive axle loads, non-parallel axles, or non-uniform tire and wheel assembly caused by improper bead seating or bent wheel.

To correct one-sided wear:

- *Tires* – Depending on severity, rotate tires to another axle position or, if worn to minimum tread depths, submit for possible retreading.
- *Vehicle* – Diagnose mechanical problem and correct.

KINGPIN BUSHING INSPECTION

INSPECTION PROCEDURE

1. Chock the wheels to help prevent the vehicle from moving. Set the parking brake.
2. Use a jack to raise the vehicle until the wheels are off the ground. Support the vehicle with safety stands.

FIGURE 7-13

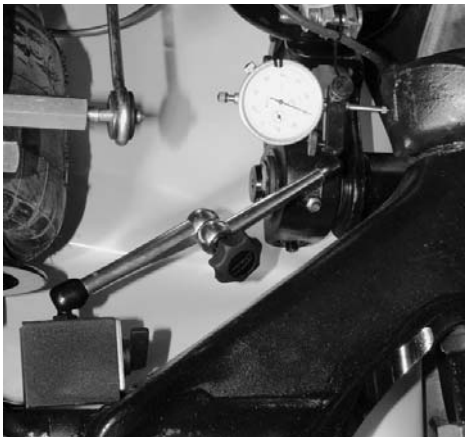

FIGURE 7-14

3. **CHECKING THE UPPER KINGPIN BUSHING**: Install the base of a dial indicator onto the axle beam, see Figure 7-13.
4. Set the dial indicator to "0" zero.
5. Move the top of the tire in and out by applying reasonable constant pressure and then release, see Figure 7-15.

FIGURE 7-15

6. Check the reading on the dial indicator. If the dial indicator moves more than 0.015", the upper bushing is worn or damaged. Replace both bushings. Refer to the Kingpin Bushing replacement procedure in the Component Replacement Section of this publication.
7. **CHECKING THE LOWER KINGPIN BUSHING**. Install a dial indicator so that the base is on the axle and the indicator tip is against the inside of the bottom of the knuckle, see Figure 7-14.
8. Set the dial indicator to "0" zero.
9. Move the bottom of the tire in and out. If the dial indicator moves more than 0.015", the lower bushing is worn or damaged. Replace both kingpin bushings. Refer to the Component Replacement Section of this publication.

NOTE If one bushing is worn or damaged, it is mandatory to replace both the top and bottom bushings on that knuckle assembly.

STEERING KNUCKLE INSPECTION

CHECKING VERTICAL END PLAY (UP AND DOWN MOVEMENT)

The operating spec for vertical clearance on the steering knuckle is 0.008" to 0.030".

1. Chock the rear tires to help prevent the vehicle from moving.
2. Set the parking brakes.
3. Use a jack to raise the vehicle until both tires are 1" off the ground.
4. Place a dial indicator on each side of the axle as follows:
   a. Index the wheels slightly (left or right).
   b. Place the magnetic dial indicator base on the axle, see Figure 7-16.
   c. Place the tip of the dial indicator on the top of the upper steering knuckle (not on the grease cap).
5. Set the dial indicator to "0" (zero).
6. Lower the jack.
7. If vertical clearance is greater than 0.030", adjust the upper knuckle to obtain clearance specifications, if adjustment does not achieve clearance specification, install shims (Hendrickson part no. 60259-002) between the top of the axle and the bottom of the upper steering knuckle to obtain the proper clearance specification. See Steering Knuckle Assembly in the Component Replacement Section of this publication for proper shim installation.
8. If vertical clearance is below 0.008", adjust the upper steering knuckle to obtain the proper clearance specification, if adjustment does not achieve clearance specification, remove shims. See Steering Knuckle Assembly in the Component Replacement Section of this publication for proper shim removal.

FIGURE 7-16

SECTION 8
Alignment & Adjustments

ALIGNMENT DEFINITIONS

FIGURE 8-1

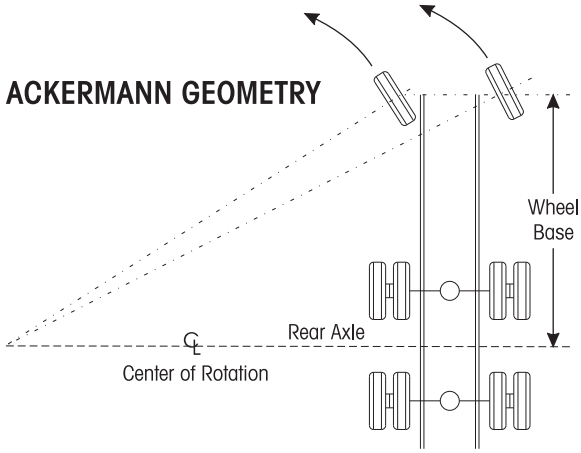

Ackermann Steering Geometry — The geometry of the four bar linkage consisting of the front axle, two knuckle assemblies, and tie rod assembly is designed to provide free rolling of front tire in a turn. Ackermann geometry is dependent upon the steering axle track-width and wheelbase of the vehicle. Improper geometry results in wheel scrub in turns which generally appears as toe wear on the tire, usually more wear on one side of the vehicle than the other due to the operational route of the vehicle.

Bump Steer (Feedback) — The feedback felt through the steering linkage to the steering wheel when a steer axle tire hits a bump in the road. This occurs because the axle-end of the drag link and the axle attachment point of the spring do not travel in parallel circular arcs as the suspension moves up and down. This condition can also be caused by trapped air in the power steering system.

FIGURE 8-2

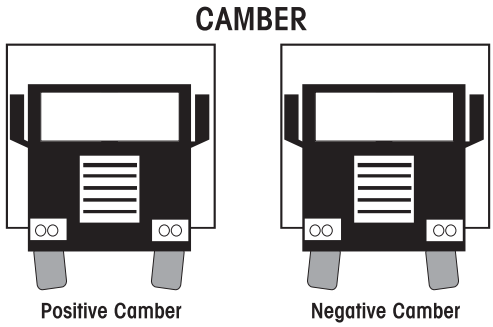

Camber — The angle formed by the inward or outward tilt of the wheel reference to a vertical line. Camber is positive when the wheel is tilted outward at the top and is negative when the wheel is tilted inward at the top.

Excessive positive camber may cause smooth wear on the outer half of the tire tread. Excessive negative camber may cause wear on the inner half of the tread. Static-unloaded camber angles are built into the axle to put the loaded tire perpendicular to the road.

FIGURE 8-3

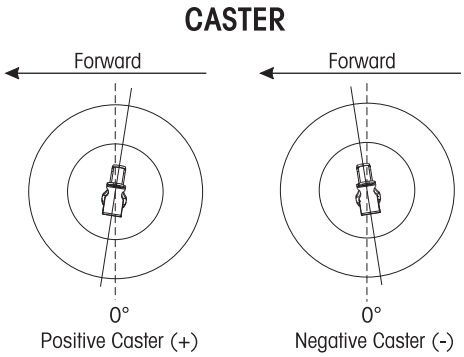

Caster — The forward or rearward tilt of the steering axle kingpin in reference to a vertical line. The angle is measured in degrees. Caster is positive when the top of the steering axis is titled rearward and is negative when the tilt is forward. Proper caster is important for directional stability and returnability. Too much positive caster can cause shimmy, excessive steering effort and is normally a vehicle performance and handling consideration. Uneven positive caster may create a steering pull toward the side with the lower caster. This attribute may be used to compensate for crowned roads.

FIGURE 8-4

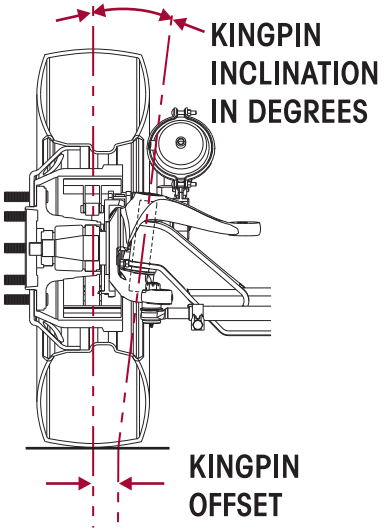

Kingpin Inclination (KPI) — The inward tilt of the kingpin from the vertical. This front suspension parameter has a pronounced effect on steering effort and returnability. As the front wheels are turned around an inclined kingpin, the front of the truck is lifted. This lifting of the vehicle is experienced as steering effort when the turn is executed and exhibits itself as recovery force when the steering wheel is released.

Kingpin Offset — The distance between the center of the tire patch and intersection of the kingpin axis with the ground. This parameter of front-end geometry is important in vehicles without power steering and has a major effect on static steering. If there is no kingpin offset, the tires must scrub around the center of the pin patch when turned in a static condition, resulting in higher static steering efforts.

Steering Arm — The component that connects the drag link to the axle knuckle assembly.

FIGURE 8-5

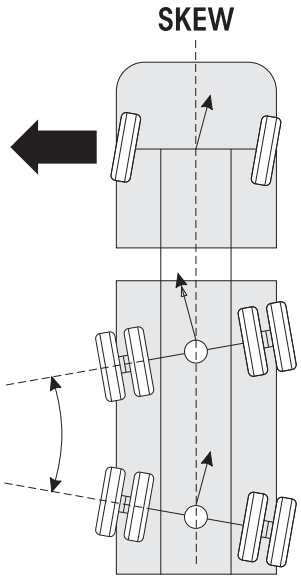

FIGURE 8-6

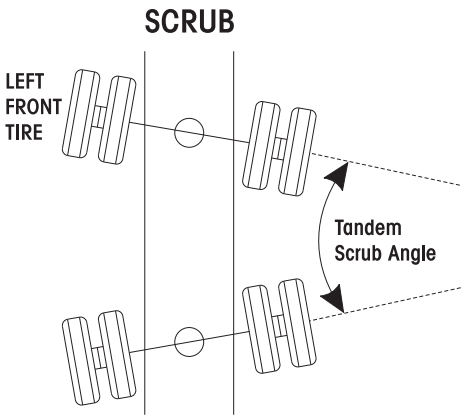

Scrub, Skew, Tram Angle or Parallelism — The angle formed by two thrust or tracking lines of a tandem (or multiple) axle vehicle. As indicated by the term "parallelism", the ideal condition is when the two thrust lines for a 0° angle, or are parallel to each other. Positive skew or tram is when the distance between the right axle ends is less than the distance between the left.

Any scrub angle other than 0° will cause the tandem axles to work against each other. The steer axle must be turned to offset the "push" of the tandem axles to keep the vehicle moving straight ahead. This causes every tire on the vehicle to "scrub." Tire wear from tandem scrubbing occurs at the leading edge of the steer tires in a pattern called "inside/outside" wear, that is, the inside edge of the left steer tire and the outside edge of the right steer tire will exhibit irregular wear for example. Additional tire wear may occur on all tandem axle tires.

FIGURE 8-7

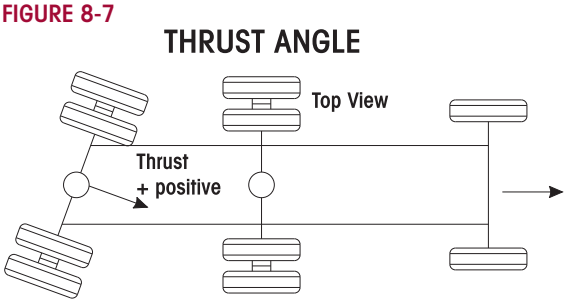

Thrust Angle, Tracking, or Square — The angle formed by the centerline of the vehicle frame (geometric centerline) and the direction that an axle points. As indicated by the term "square", the ideal value for the angle is 0° or when the axle centerline is at 90° or perpendicular to the geometric centerline. Thrust or tracking to the right is positive, and to the left is negative.

A steering correction is required to offset the effect of the thrust angles and keeps the vehicle traveling in a straight line. It results in a lateral offset between the steer and drive axle tires commonly referred to as "dog tracking."

Tie Rod Arm (Ackermann-Arm, Cross Tube Arm) — The component that transmits steering forces between left and right axle knuckle assemblies through the cross tube assembly.

FIGURE 8-8

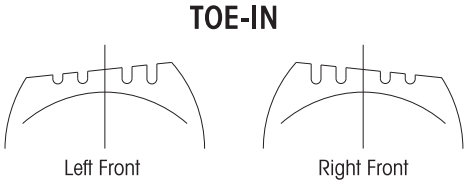

Toe-in — Is when the horizontal line intersects in front of the wheels, or the wheels are closer together in front than in the back. Toe-in is commonly designated as positive, toe-out as negative. Excessive toe-in wears the outside edge of the tires. Steer axle toe is adjustable to reduce wear to the leading edge of the tire and also to avoid road wander. Toe is adjusted in a static, unloaded condition so that the tires will run in a straight line under a dynamic, loaded condition.

FIGURE 8-9

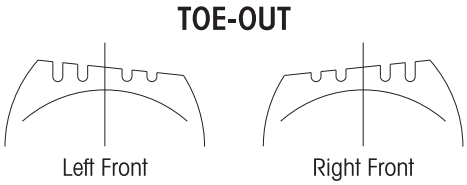

Toe-out — Is when the horizontal lines intersect behind the wheels, or the wheels are closer together in back than in front. Toe-in is commonly designated as positive, toe-out as negative. Excessive toe-out wears the inside edge of the tires. Steer axle toe is adjustable to reduce wear to the leading edge of the tire and also to avoid road wander. Toe is adjusted in a static, unloaded condition so that the tires will run in a straight line under a dynamic, loaded condition.

FIGURE 8-10

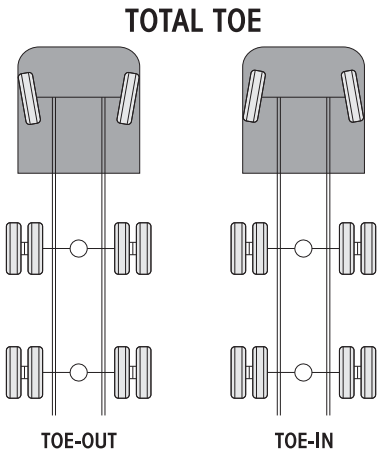

Toe-out on Turns — (See Ackermann Geometry). Excessive turning angles such as those encountered in pickup and delivery operations may contribute to premature tire wear. Be advised that the greater turning angles, the more that toe and camber change. If you have any doubt regarding the optimum turning angles for your operation, contact the vehicle's manufacturer, axle OEM, tire OEM and alignment equipment manufacturer for advice.

Total Toe — The angle formed by two horizontal lines through the planes of two wheels. Steer axle toe is adjustable to reduce wear to the leading edge of the tire and also to avoid road wander. Toe is adjusted in a static, unloaded condition so that the tires will run in a straight line under a dynamic, loaded condition.

GENERAL INSPECTION PRIOR TO ALIGNMENT

WHEELS AND TIRES

Examine the following items:

- The tires are inflated to the manufacturer's specified tire pressure.
- The steer axle tires are the same size and type.
- The lug nuts are tightened to manufacturer's specified torque.
- The wheels are balanced and check for tire to rim runout.
- The wheels and tires are free of excessive wear and damage.
- Wheel bearing end play is within OEM specification.

FRONT SUSPENSION

Inspect the following:

- All fasteners are installed and tightened to the specified torque. See Tightening Torque Specification section of this publication.
- Leaf springs are free of wear or damage.
- Air springs are free of wear or damage (if equipped).

- Shock absorbers are free of wear and damage.
- Vehicle ride height for both the front and rear are within specification. Follow manufacturer's guidelines (if equipped).
- Front and rear spring mounts for wear or damage.

INSPECT TIE ROD ENDS

Perform "Tie Rod Inspection" procedure, refer to the Preventive Maintenance Section of this publication.

REAR AXLE AND REAR SUSPENSION

Rear axle misalignment can cause front tire wear. If the outer edge of one front tire is worn and the inner edge of the other front tire is worn, check the following:

- Make sure the rear axle (especially a tandem axle) is correctly aligned. Refer to the procedure from the manufacturer of the vehicle or the suspension.
- All fasteners including U-bolts (if applicable) are installed and tightened to the specified torque.
- The leaf springs are not worn or damaged.
- The bushings in the leaf springs are not worn or damaged.
- The torque rods (if used) are correctly adjusted (if adjustable).
- The frame is not bent or twisted.
- Refer to any additional recommendations and specifications from the manufacturer of vehicle on rear axles and suspensions. Reference the TMC (The Technology & Maintenance Council) Guidelines for Total Vehicle Alignment.

FRONT WHEEL ALIGNMENT

Hendrickson recommends technicians review TMC's publication TMC (Technology & Maintenance Council) "Guidelines for Total Vehicle Alignment".

The STEERTEK front wheel alignment specification can be found in the Front Alignment Specifications Section of this technical publication.

Check the total vehicle wheel alignment when the following occur:

- Every 80,000 to 100,000 miles, or 12-18 months (normal maintenance).
- When the vehicle does not steer correctly.
- To correct a tire wear condition.
- There are two types of front wheel alignment:
  1. *Minor alignment* – a minor front wheel alignment is done **for all** normal maintenance conditions, see below.
  2. *Major alignment* – a major alignment is done when uneven or excessive tire wear is evident, or response at the steering wheel is sluggish, or the need for major wheel alignment check and adjustment is required, see below.

MINOR FRONT WHEEL ALIGNMENT

Perform the minor front wheel alignment in the following sequence:

1. Inspect all systems that affect wheel alignment. Refer to "Inspection Prior to Alignment" in this Section.
2. Check the wheel bearing end play.

3. Check and adjust the vehicle ride height as specified in the Preventive Maintenance Section of this publication.
4. Check toe-in and adjust if necessary.

MAJOR FRONT WHEEL ALIGNMENT

Be certain to follow wheel alignment inspection intervals as specified by the original equipment manufacturer. Before performing a major front wheel alignment it is recommended that alignment equipment calibration be checked to ensure proper vehicle alignment.

Major wheel alignment is accomplished in the following sequence of operation:

1. Inspect all the systems that influence the wheel alignment. Refer to the "Inspection Prior to Alignment" in this section.
2. Check and adjust the maximum turn angle, (see "Steering Stop Procedure" in this section), see Figures 8-11 and 8-12.
3. If the vehicle has power steering, check and adjust, if necessary, the pressure relief in the power steering system. Refer to "Adjusting the Pressure Relief in the Power Steering System" (see Vehicle Manufacturer's Specifications), see Steer Stops in the Alignment & Adjustments Section of this publication.
4. Verify the turning angle per Step 2, (toe-out during vehicle turns or the Ackermann angle). Refer to OEM specifications.

FIGURE 8-11

FIGURE 8-12

5. Check the kingpin (or steering axis) inclination (the kingpin inclination is not adjustable). Refer to "Kingpin Inclination", in the Definitions under the Alignment & Adjustments Section of this publication.
6. Check the camber angle. Do not attempt to adjust. Refer to "Camber Angle" in the Definitions under the Alignment & Adjustments Section of this publication.

WARNING

AXLE CAMBER IS NOT ADJUSTABLE. DO NOT CHANGE THE AXLE CAMBER ANGLE OR BEND THE AXLE BEAM. BENDING THE AXLE BEAM TO CHANGE THE CAMBER ANGLE CAN DAMAGE THE AXLE AND REDUCE AXLE STRENGTH, AND WILL VOID HENDRICKSON'S WARRANTY. A BENT AXLE BEAM CAN CAUSE LOSS OF VEHICLE CONTROL, POSSIBLY CAUSING PERSONAL INJURY OR PROPERTY DAMAGE, SEE FIGURE 8-13.

7. Check and adjust caster angle. Refer to "Caster Angle" in the Definitions under the Alignment & Adjustments Section of this publication. **The use of two different angle caster shims will not change cross caster.** Cross caster is the difference between the caster readings for left and right side of the vehicle.

FIGURE 8-13

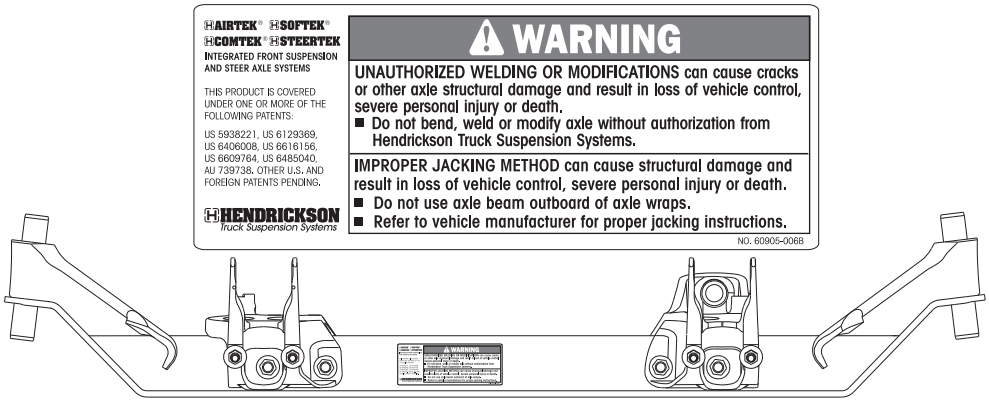

SERVICE HINT

Prior to checking caster confirm that the vehicle is at its proper ride height front and rear. The front and rear ride height must be correct to achieve proper caster.

8. Check and adjust toe-in, refer to adjusting the Toe-In under "Definitions" in the Alignment & Adjustments Section of this publication.

STEERING STOP

ADJUSTMENT PROCEDURE

When the axle or lower steering knuckle is replaced, the steering stop adjustment must be checked.

FIGURE 8-14

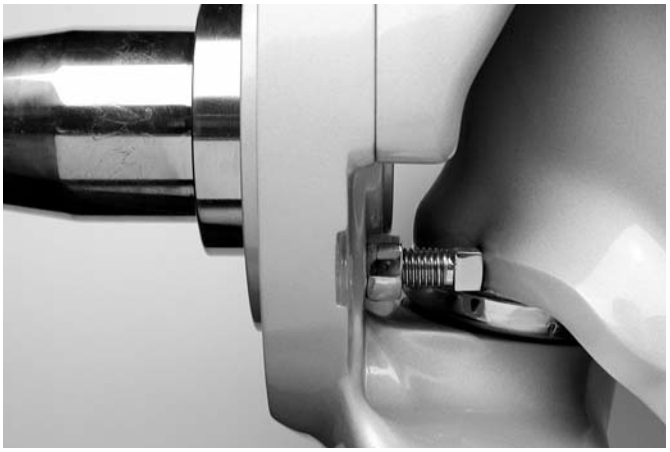

The steering stop adjustment procedure is as follows:

1. Drive truck onto turntables and chock the rear wheels.
2. Measure the wheel cut. The wheel cut is determined by steering the tires. Wheel cut is measured at the inside wheel only, therefore the tires must be turned to the full lock position for each right hand and left hand direction. Refer to the vehicle manufacturer for exact specifications.
3. Increase the wheel cut by loosening the jam nuts and screw the axle stops in clockwise.

4. Tighten the jam nuts.

NOTE It is very important that the sides of the square head axle stops are set parallel to the axle beam to ensure a good contact point on the axle, see Figure 8-14.

5. Decrease the wheel cut by loosening the jam nuts and screw the axle stops out counter-clockwise.
6. Tighten the jam nuts to 40-60 foot pounds torque.
7. Measure the wheel cut and check for any interference with related steering components.

WARNING ALWAYS CHECK/RESET THE STEERING GEAR BOX POPPETS WHEN THE WHEEL CUT IS DECREASED. FOLLOW MANUFACTURER'S GUIDELINES FOR THE GEAR BOX POPPET RESETTING PROCEDURE. FAILURE TO DO SO CAN RESULT IN PREMATURE FAILURE OF THE AXLE OR STEERING KNUCKLE. THIS CONDITION CAN CAUSE LOSS OF VEHICLE CONTROL, PERSONAL INJURY OR PROPERTY DAMAGE AND VOID WARRANTY.

FIGURE 8-15

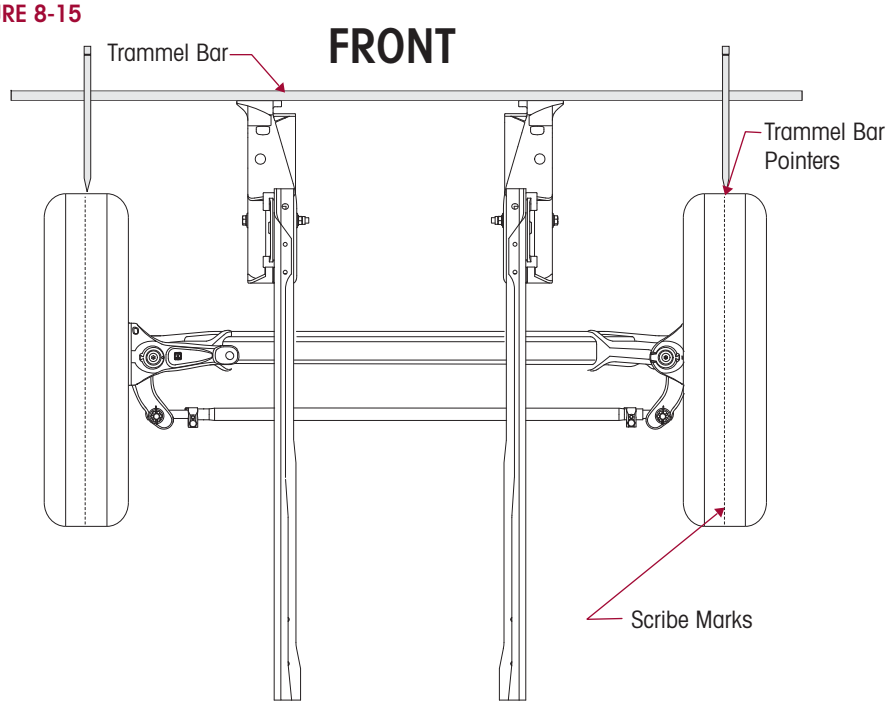

TOE SETTING

1. Place the vehicle on a level floor with the wheels in a straight ahead position.
2. Raise the vehicle and support the front axle with jack stands.
3. Use paint and mark the center area of tread on both steer axle tires around the complete outer diameter of the tires.
4. Scribe a line through both steer axle tires in the painted area around the complete outer diameter of the tires.
5. Raise the vehicle and remove the jack stands.
6. Set the vehicle on the ground.

NOTE Do not measure toe-in with the front axle off the ground. The weight of the vehicle must be on the front axle when toe-in is measured.

7. Use a trammel bar and measure the distance between the scribe marks at the rear of the steer axle tires. Record the measurement.

8. Install the trammel bar and measure the distance between the scribe marks at the front of the steer axle tires. Record the measurement, see Figure 8-15.

NOTE When setting up the trammel bar the pointers should be level with the spindles at the front and rear of the steer axle tires.

9. To calculate the toe setting subtract the front measurement from the rear measurement, the difference between the two will equal the toe-in/toe-out measurement.
10. If the toe measurement is not within the specifications of 1/16" ± 1/32" (0.06" ± 0.03"), it will be necessary to adjust the toe setting. Refer to the following procedure.
    a. Loosen the tie rod cross tube clamp bolts and locknuts.
    b. Turn the tie rod cross tube until the specified toe-in distance is achieved.

WARNING THE THREADED PORTION OF THE TIE ROD END MUST EXTEND PAST THE SLOTS INTO THE TIE ROD CROSS TUBE, SEE FIGURE 8-16. FAILURE TO DO SO CAN CAUSE COMPONENT TO FAIL CAUSING LOSS OF VEHICLE CONTROL AND POSSIBLE PERSONAL INJURY OR PROPERTY DAMAGE.

    c. Tighten the bolt and locknut on the tie rod cross tube to 60-75 foot pounds torque.
11. Repeat Steps 1-9 until the correct toe setting is achieved.

FIGURE 8-16

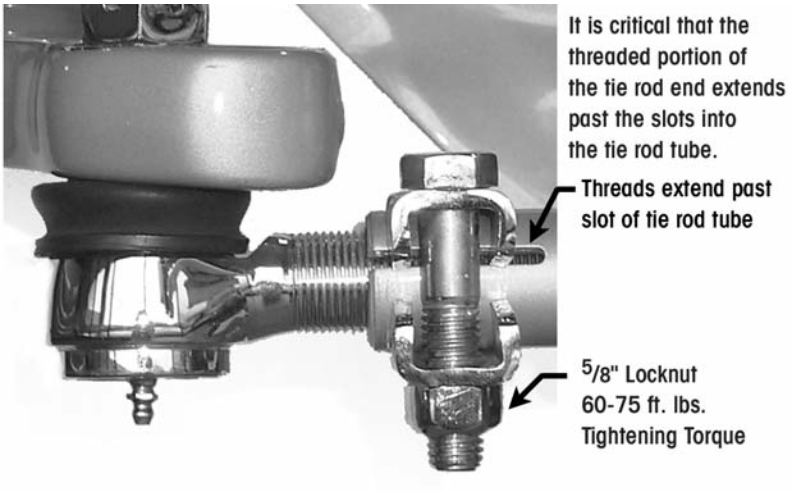

SECTION 9
Component Replacement

FASTENERS

Hendrickson recommends that when servicing the vehicle to replace the removed fasteners with new equivalent fasteners. Maintain correct torque values at all times. Check torque values as specified. See Hendrickson's Torque Specifications section in this publication. If non-Hendrickson fasteners are used follow torque specifications listed in the vehicle manufacturer's service manual.

AXLE BRACKET

WARNING

THE STEERTEK AXLE FOR INTERNATIONAL TRUCK MULTILINK FAS HAS UNIQUE AXLE BRACKETS WHICH ARE NON-SERVICEABLE. THE AXLE BRACKET FASTENERS TO AXLE ARE ALSO NON-SERVICEABLE. IF THE AXLE BRACKET IS LOOSE OR DAMAGED, IT IS NECESSARY TO REPLACE THE ENTIRE AXLE ASSEMBLY. THE AXLE BRACKETS AND FASTENERS ARE INCLUDED IN THE AXLE ASSEMBLY AND ARE NOT SOLD SEPARATELY. IMPROPER REPLACEMENT OR REMOVAL OF THE AXLE BRACKET AND/OR AXLE BRACKETS FASTENERS, OR FAILURE TO FOLLOW THESE GUIDELINES CAN CAUSE LOSS OF VEHICLE CONTROL, POSSIBLE PERSONAL INJURY, DEATH, OR PROPERTY DAMAGE AND WILL VOID APPLICABLE WARRANTIES.

STEERING KNUCKLE

DISASSEMBLY

NOTE

See tools needed to remove and install kingpin bushing under the Special Tools Section of this publication.

The steering knuckle disassembly and assembly includes the Kingpin Preparation and Measurement and Kingpin Bushing Removal process.

1. Place the vehicle on level floor.
2. Chock the wheels.
3. Support the vehicle with jack stands on the axle.
4. Remove the wheel and hub assembly.
5. Remove the brake components from steering knuckle.
6. Remove the tie rod assembly.

SERVICE HINT

Lightly tap the side of the Ackermann arm with a mallet to separate the tie rod end from the Ackermann arm, see Figure 9-1.

7. Remove the drag link from the knuckle if necessary.

FIGURE 9-1

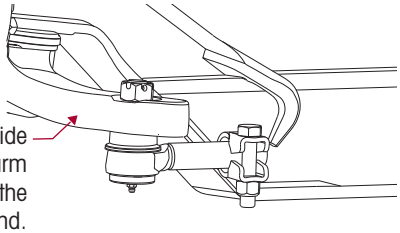

WARNING

REMOVAL OF THE CAP SCREWS WILL ALLOW THE STEERING KNUCKLE TO SEPARATE FROM THE AXLE. THE STEERING KNUCKLE MUST BE SUPPORTED BEFORE REMOVAL OF THESE TWO (2) CAP SCREWS. FAILURE TO DO SO CAN CAUSE COMPONENT DAMAGE OR PERSONAL INJURY.

8. Remove the 2 socket head cap screws that connect upper kingpin connection to the steering knuckle, see Figure 9-2.
9. Remove the lower steering knuckle from the kingpin by sliding it down the kingpin.
10. Remove the upper steering knuckle by sliding it up off the kingpin.

FIGURE 9-2

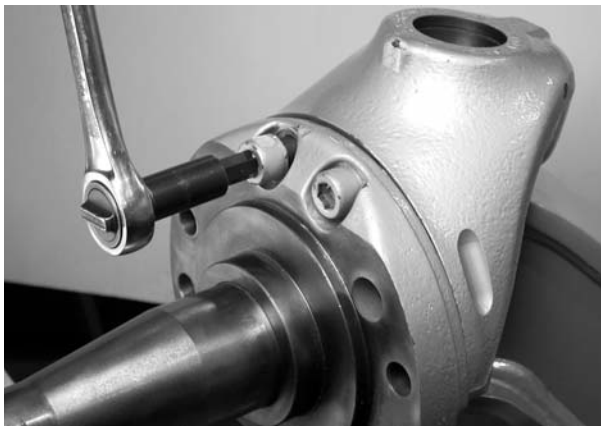

KINGPIN PREPARATION AND MEASUREMENT

CLEANING GROUND AND POLISHED PARTS

- Use a cleaning solvent to clean ground or polished parts and surfaces. **DO NOT USE GASOLINE.**
- Do not clean ground or polished parts in a hot solution tank or with water, steam, or alkaline solutions. These solutions will cause corrosion of the parts.

DRYING THE CLEANED PARTS

- Parts must be dried immediately after cleaning. Dry the parts with clean paper towels, clean rags, or compressed air. Do not dry bearings by spinning with compressed air. Damage to the bearings will result.

PREVENTING CORROSION ON CLEANED PARTS

- Apply a light coating of oil to all cleaned and dried parts that are going to be reused. Do not apply oil to the brake lining or the brake drums. If parts are to be stored, apply an effective rust inhibitor to all surfaces.

WARNING

TO HELP PREVENT SERIOUS EYE INJURY, ALWAYS WEAR PROPER EYE PROTECTION WHEN YOU PERFORM VEHICLE MAINTENANCE OR SERVICE.

WARNING

SOLVENT CLEANERS CAN BE FLAMMABLE, POISONOUS AND CAUSE BURNS. TO HELP AVOID SERIOUS PERSONAL INJURY, CAREFULLY FOLLOW THE MANUFACTURER'S PRODUCT INSTRUCTIONS AND GUIDELINES AND THE FOLLOWING PROCEDURES:

- WEAR PROPER EYE PROTECTION.
- WEAR CLOTHING THAT PROTECTS YOUR SKIN.
- WORK IN A WELL VENTILATED AREA.
- DO NOT USE GASOLINE, SOLVENTS OR OTHER MATERIALS THAT CONTAIN GASOLINE THAT CAN EXPLODE.
- HOT SOLUTION TANKS OR ALKALINE SOLUTIONS MUST BE USED CORRECTLY. FOLLOW THE MANUFACTURER'S RECOMMENDED INSTRUCTIONS AND GUIDELINES CAREFULLY TO HELP PREVENT PERSONAL ACCIDENT OR INJURY.

CAUTION

DO NOT USE HOT SOLUTION TANKS OR WATER AND ALKALINE SOLUTIONS TO CLEAN GROUND OR POLISHED PARTS. DAMAGE TO THE PARTS WILL RESULT.

WARNING

THE STEERTEK HAS AN UNIQUE AXLE. THE KINGPIN IS CRYOGENICALLY INSTALLED IN THE AXLE. THE KINGPIN IS A NON-REPLACEABLE COMPONENT OF THE AXLE ASSEMBLY. DO NOT TRY TO REMOVE THE KINGPIN. DOING SO WILL DAMAGE THE AXLE AND MAY CAUSE LOSS OF VEHICLE CONTROL, PERSONAL INJURY OR PROPERTY DAMAGE. IF THE KINGPIN SHOWS SIGNS OF MOVEMENT, CONTACT HENDRICKSON PRODUCT ENGINEERING - TECH SERVICES.

1. Prepare and polish the kingpin by removing all grease and excess debris using a fine grit (220 grit or higher) emery cloth and parts solvent, see Figures 9-3 through 9-6.

FIGURE 9-3

FIGURE 9-4

FIGURE 9-5 Kingpin Before Cleaning

FIGURE 9-6 Kingpin After Cleaning

2. Inspect the kingpin for wear or damage. Use a micrometer and measure the upper and lower kingpin in two locations. Positions must be 90º opposed from each other. If the kingpin has less than 1.802" diameter, replacement of the axle is necessary, see Figures 9-7 through 9-10.

   Kingpin minimum dimension is 1.802"

FIGURE 9-7

FIGURE 9-8

FIGURE 9-9

FIGURE 9-10

KINGPIN BUSHING REMOVAL

1. Remove the retaining ring for the grease cap.
2. A hydraulic shop press with a minimum forcing capacity of 2.5 tons (or use an arbor press) will be required.

WARNING

BEFORE APPLYING HYDRAULIC PRESSURE TO ANY TOOLING SET-UP, ALWAYS CHECK TO BE SURE THE PRESS PLATE, ADAPTERS, AND COMPONENTS BEING WORKED ON ARE POSITIONED PROPERLY, I.E. "IN LINE" WITH THE RAM. IMPROPER POSITIONING CAN CAUSE PERSONAL INJURY OR COMPONENT DAMAGE.

CAUTION

BEFORE APPLYING HYDRAULIC PRESSURE TO REMOVE OR INSTALL THE KINGPIN BUSHING, SUPPORT THE LOWER STEERING KNUCKLE AS SHOWN IN FIGURES 9-11 AND 9-12. IMPROPER SUPPORT TO THE STEERING KNUCKLES CAN CAUSE COMPONENT DAMAGE.

3. Use the grease cap to press out the kingpin bushing and seal. Remove the grease zerk in the grease cap or use a hollow driver, (see Figure 9-11) to press out the kingpin bushing.
4. Install the lower steering knuckle upside down in press. Be sure to support the lower steering knuckle assembly so that it sits in-line with the press, see Figure 9-12.
5. Use the same procedure to remove the kingpin bushing in the upper kingpin connection or the steering arm, see Figures 9-11 through 9-14.
6. Clean the parts and inspect for reassembly, see Figure 9-14.

FIGURE 9-11

FIGURE 9-12

FIGURE 9-13

FIGURE 9-14

STEERING KNUCKLE BORE MEASUREMENT

Complete the following steering knuckle bore inspection and the measurement instructions prior to installing the kingpin bushing.

1. Measure the upper knuckle bore inside diameter at two locations. Always use an inside micrometer or a telescoping gauge when taking a knuckle bore measurement. Some out-of-roundness at the top and bottom of the bore edges is acceptable. Steering knuckle bore diameter is 1.938" ± 0.003"
2. Measure the upper and lower bore in two positions and at two locations. The two positions must be 90º opposed from each other, see Figures 9-15 through 9-17. If the average measurement is more than the knuckle bore maximum diameter specification, replace the knuckle.

FIGURE 9-15

FIGURE 9-16

FIGURE 9-17

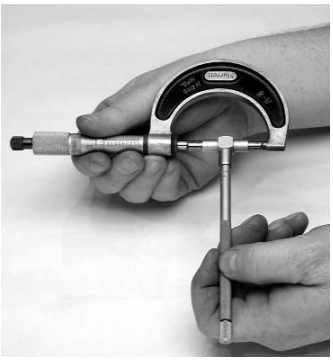

KINGPIN BUSHING INSTALLATION

1. A hydraulic shop press with a minimum forcing capacity of 5 tons will be required.

WARNING

BEFORE APPLYING HYDRAULIC PRESSURE TO ANY TOOLING SET-UP, ALWAYS CHECK TO BE SURE THE PRESS PLATE, ADAPTERS, AND COMPONENTS BEING WORKED ON ARE POSITIONED PROPERLY, I.E. "IN LINE" WITH THE RAM. IMPROPER POSITIONING CAN CAUSE PERSONAL INJURY OR COMPONENT DAMAGE.

2. Install the lower or upper steering knuckle in the press.
3. Install the kingpin bushing from the machined side (axle side) of the lower steering knuckle using a bushing driver, (see driver specifications in the Special Tools Section of this publication). Press in bushing to a depth of no less than 15/64" (0.236") or 6 millimeters and no more than 5/16" (0.32") or 8 millimeters, see Figures 9-18 and 9-20.
4. Following this procedure it is necessary to ream the kingpin bushings to fit the kingpins, (see Kingpin Bushing Reaming Instructions).

FIGURE 9-18

FIGURE 9-19

FIGURE 9-20

KINGPIN BUSHING REAMING

CAUTION

REAM THE KINGPIN BUSHINGS WITH AN ADJUSTABLE STRAIGHT FLUTE REAMER. DO NOT HONE OR BURNISH THE KINGPIN BUSHINGS. HONING OR BURNISHING WILL DAMAGE THE BUSHINGS AND VOID WARRANTY.

WARNING

WHEN INSTALLING STEERING KNUCKLE COMPONENTS IN A VISE IT IS NECESSARY TO PROTECT THE MACHINED SURFACES FROM GOUGES OR MARRING BY USING BRASS JAWS. FAILURE TO DO SO CAN CAUSE PREMATURE PART DAMAGE, DAMAGE TO THE STEERING KNUCKLE COMPONENTS, LOSS OF WARRANTY, LOSS OF VEHICLE CONTROL, CAUSING PERSONAL INJURY OR PROPERTY DAMAGE.

1. Install the lower steering knuckle assembly in a vise with brass jaws.

SERVICE HINT

It is acceptable to mount the knuckle components in a vise either vertically or horizontally when performing the reaming procedure.

2. Install the reamer into the lower steering knuckle until the blades touch the kingpin bushing.
3. Rotate the reamer with light downward pressure. Rotate the reamer smoothly. Do not apply too much pressure, see Figures 9-21 and 9-22.

FIGURE 9-21

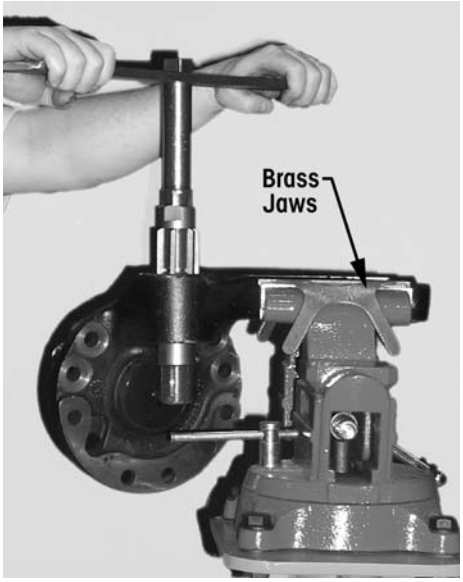

FIGURE 9-22

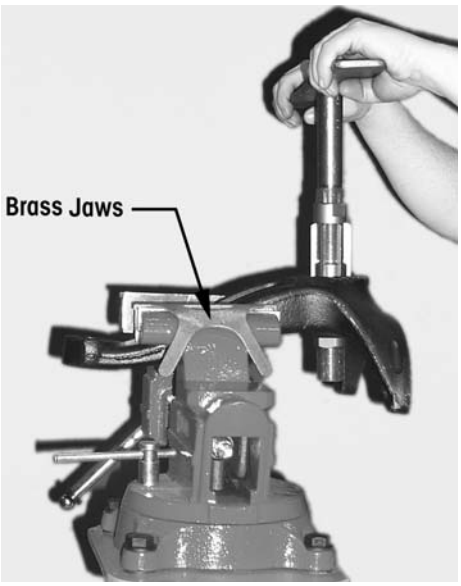

4. Slide the reamer out of the lower steering knuckle assembly. If it is necessary to remove the reamer from the top, rotate the reamer opposite of cutting rotation.
5. Clean and remove all kingpin bushing material from the knuckle assembly. Take special attention to remove material from the grease channels and dimples.
6. Clean the 5/8" brake backing plate bolts with a wire wheel and run a tap through the threads of the upper kingpin connection/steering arm and then flush out with brake cleaner and dry with compressed air.

WARNING

PRIOR TO INSTALLATION ENSURE THAT ALL RESIDUAL LOCTITE MATERIAL IS REMOVED FROM THE MOUNTING BOLTS AND THE THREAD BORES IN THE UPPER KINGPIN CONNECTION OR STEERING ARM, AND NEW LOCTITE 277 OR EQUIVALENT IS APPLIED TO HELP ENSURE THAT THE BOLTS SUSTAIN THE PROPER TORQUE REQUIREMENT. FAILURE TO DO SO CAN CAUSE LOSS OF VEHICLE CONTROL RESULTING IN PERSONAL INJURY OR PROPERTY DAMAGE.

NOTE

The Hendrickson Genuine part, socket head cap screw comes with a pre-applied loctite compound.

7. Install the steering arm and upper kingpin connection on the kingpin.
8. Check for the proper fit by rotating the knuckle assembly back and forth to verify there is no binding on the kingpin, see Figures 9-23 and 9-24.
9. If the bushing is too tight repeat Steps 1 through 8 until the proper clearance is achieved.

NOTE

Bushing size is to be 0.001" larger than the kingpin size.

FIGURE 9-23

FIGURE 9-24

KINGPIN SEAL INSTALLATION

1. Place the steering knuckle assembly in a vise with brass jaws or place on a suitable workbench. The steering knuckle will have the machined surface facing up (axle side up).
2. Lay the kingpin seal into the bore of the steering arm or upper kingpin connection. The seal lip should face outward or toward the axle.
3. Use a bushing driver tool and press seal firmly into the lower steering knuckle assembly.
4. Install the kingpin seal until it makes contact with the kingpin bushing, see Figures 9-25 and 9-26.

FIGURE 9-25

FIGURE 9-26

STEERING KNUCKLE ASSEMBLY

ASSEMBLY

After replacement of the kingpin bushings it is necessary to re-assemble the steering knuckle assemblies. Do not substitute aftermarket components when servicing.

FIGURE 9-27

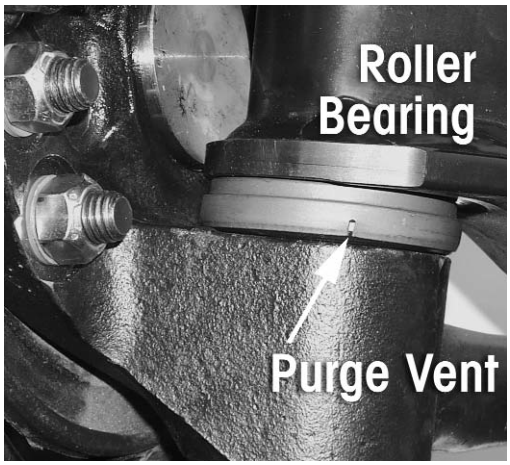

1. Install the thrust bearing on the lower kingpin with the seal facing up toward axle (the black seal will designate the top side).
2. Install the shim on the upper kingpin.
3. Pack the bushing dimples on the upper and lower steering knuckles with multi purpose Lithium based grease (NLGI Grade 2) before installation, see Figure 9-27.
4. Install the upper steering knuckle on the upper arm kingpin.
5. Install the lower steering knuckle on the lower kingpin and install the old socket head cap screws loose into the top two threaded holes.

SERVICE HINT

The easiest way to achieve this is with the grease caps not installed in the knuckle assemblies. This eliminates back pressure. The assembly can then freely slide up and down on the kingpin. If the grease caps are still installed, remove the grease zerks to avoid creating back pressure. Grease zerks will be re-installed at the end of the procedure.

6. Install a bottle jack under the lower knuckle and slightly raise the knuckle until it is possible to thread in the (3) brake backing plate bolts by hand. These are for guide purposes only.
7. Snug the two socket head cap screws.
8. Lower the bottle jack so that all the vertical clearance is on the underside of the axle.
9. Affix a magnetic base dial indicator on the axle and place the tip of the dial indicator on top of the knuckle assembly, see Figure 9-28.

FIGURE 9-28

Checking vertical end play can be performed with the wheel end assembly on.

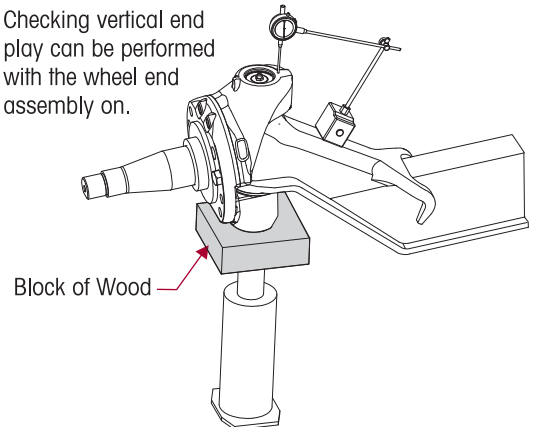

10. Zero the dial indicator.
11. Raise the bottle jack until there is no clearance between the knuckle assembly and the bottom of the axle, slightly lifting the axle.
12. Check the reading on the dial indicator. The specification for vertical travel on the steering knuckle during assembly is 0.008" to 0.011".
13. If the clearance is above 0.011", loosen the socket head cap screws and push down on the knuckle assembly until the proper vertical clearance is achieved. Add (0.005") shim if necessary.

14. If the clearance is below the 0.008", loosen the two socket head cap screws and pull up on the knuckle assembly until the proper vertical clearance is achieved. If the 0.008" minimum clearance is unattainable it may be necessary to remove a 0.005" shim.

NOTE

The Hendrickson Genuine part, socket head cap screw comes with a pre-applied loctite compound.

WARNING

PRIOR TO INSTALLATION ENSURE THAT ALL RESIDUAL LOCTITE MATERIAL IS REMOVED FROM THE MOUNTING BOLTS AND THE THREAD BORES IN THE UPPER STEERING KNUCKLE, AND NEW LOCTITE 277 OR EQUIVALENT IS APPLIED TO HELP ENSURE THAT THE BOLTS SUSTAIN THE PROPER TORQUE REQUIREMENT. FAILURE TO DO SO CAN CAUSE LOSS OF VEHICLE CONTROL RESULTING IN PERSONAL INJURY OR PROPERTY DAMAGE.

15. Remove one old socket head cap screw, replace with new socket head cap screw and tighten to 175-200 foot pounds torque.
16. Remove second socket head cap screw, replace with new socket head cap screw and tighten to 175-200 foot pounds torque.
17. Recheck the vertical clearance with the dial indicator or a 0.010" feeler gauge, see Figure 9-28.
18. Remove the brake spider bolts, they should thread out freely.
19. Remove the bottle jack and continue assembling the wheel ends.

IMPORTANT NOTE

Loctite applied to the three brake spider bolts is a critical procedure to ensure that these bolts sustain the torque requirement for the steering knuckle assembly.

20. Apply loctite to the three brake spider bolts prior to installation into the brake spider. Tighten bolts to the vehicle manufacturer's specifications.

WARNING

DO NOT GREASE KNUCKLES WITHOUT THE BRAKE SPIDER INSTALLED AND TIGHTENED TO PROPER TORQUE. FAILURE TO DO SO CAN CAUSE COMPONENT DAMAGE RESULTING IN FAILURE AND LOSS OF VEHICLE CONTROL, POSSIBLY CAUSING PERSONAL INJURY OR PROPERTY DAMAGE.

21. Install the tie rod end into the lower steering knuckle arm.
22. Tighten the castle nuts to 185 foot pounds torque then rotate the castle nut to the next castle slot and install cotter pin.
23. Install the drag link into the steering arm and tighten to the vehicle manufacturer's specifications.
24. Install new o-rings on the grease caps and lubricate o-rings with grease.
25. Install grease caps and new retaining rings.
26. Install brakes, drums, wheels and tires.
27. Remove jack and safety stands.
28. Grease steering knuckles with the vehicle on the floor.
29. Remove wheel chocks.

TIE ROD END AND CROSS TUBE

DISASSEMBLY

1. Chock the wheels.
2. Position the steer axle tires straight ahead.
3. Remove the cotter pin and castle nut.
4. Lightly tap the side of the Ackermann arm to loosen the tie rod end from the Ackermann arm, see Figure 9-29.

FIGURE 9-29

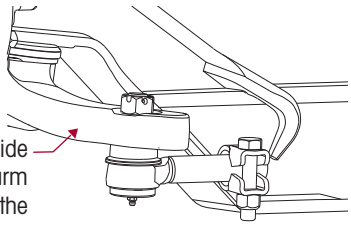

5. Repeat Steps 3 and 4 to remove the other tie rod end.
6. Remove the cross tube and tie rod ends from the vehicle.
7. Mount the cross tube in a soft jaw vice.
8. Remove the hardware from the clamp on the cross tube.
9. Count the exposed threads on the tie rod end being replaced.
10. Remove the tie rod end from the cross tube.

WARNING

DO NOT HEAT THE CROSS TUBE WITH A TORCH TO FACILITATE THE REMOVAL OF THE TIE ROD END. THE USE OF SUCH HEAT CAN ADVERSELY AFFECT THE STRENGTH OF THE CROSS TUBE. A COMPONENT DAMAGED IN THIS MANNER WILL RESULT IN LOSS OF WARRANTY, AND CAN RESULT IN THE AND LOSS OF VEHICLE CONTROL, AND POSSIBLE PERSONAL INJURY OR PROPERTY DAMAGE.

11. If the opposing tie rod end is being replaced repeat Steps 8 through 10.
12. Inspect the cross tube for dents, cracks, or thread damage. Replace the cross tube if needed.

ASSEMBLY

1. Lubricate the new tie rod end threads with Anti-Seize.

NOTE

When installing the cross tube the thread direction of the tie rod ends are as follows:
- A right hand threaded tie rod end will be installed into the right side Ackermann arm.
- A left hand threaded tie rod end will be installed into the left side Ackermann arm.

2. Install the new tie rod end into the cross tube, leaving the same amount of threads exposed that were counted on the failed tie rod end prior to removal.

WARNING

THE THREADED PORTION OF THE TIE ROD END MUST EXTEND PAST THE SLOTS INTO THE TIE ROD CROSS TUBE, SEE FIGURE 9-30. FAILURE TO DO SO CAN CAUSE COMPONENT DAMAGE, LOSS OF VEHICLE CONTROL AND POSSIBLE PERSONAL INJURY OR PROPERTY DAMAGE.

3. Replace the opposing tie rod end if necessary by repeating Steps 2 and 3.
4. If replacing opposing tie rod end, it is critical that the cross tube will rotate in the opposing tie rod end.

FIGURE 9-30

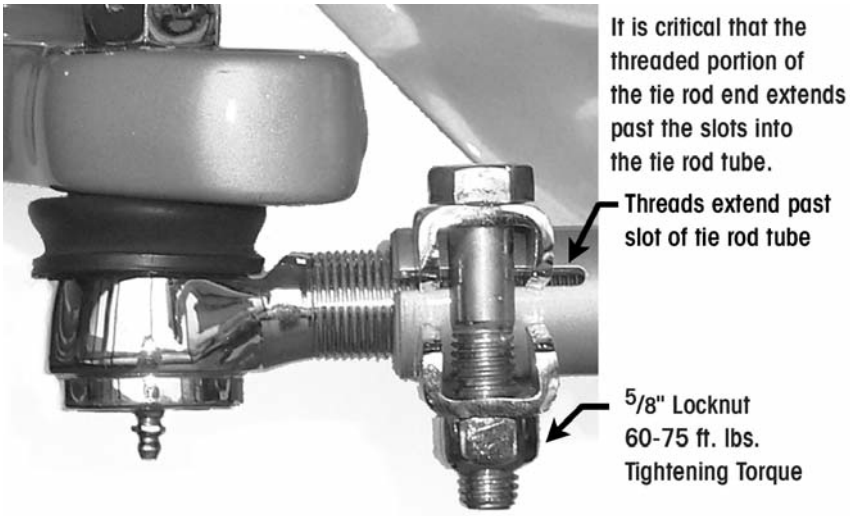

WARNING

DO NOT HEAT THE CROSS TUBE WITH A TORCH TO ROTATE THE CROSS TUBE IN THE TIE ROD END. THE USE OF SUCH HEAT CAN ADVERSELY AFFECT THE STRENGTH OF THE CROSS TUBE. A COMPONENT DAMAGED IN THIS MANNER WILL RESULT IN LOSS OF WARRANTY, AND CAN RESULT IN THE LOSS OF VEHICLE CONTROL, AND POSSIBLE PERSONAL INJURY OR PROPERTY DAMAGE.

5. Install the cross tube into the Ackermann arms.
6. Tighten the castle nuts to 185 foot pounds torque then rotate the castle nut to the next castle slot and install cotter pin.
7. Grease tie rod ends, see Lubrication Chart for required lubricant in the Preventive Maintenance Section of this publication.
8. Set the toe, (see the Toe Setting Procedure in the Alignment & Adjustments Section of this publication).

SECTION 10
Troubleshooting Guide

STEERTEK		
TROUBLESHOOTING GUIDE		
CONDITION	**POSSIBLE CAUSE**	**CORRECTION**
Worn or damaged kingpins and kingpin bushings	Dirt in system – contaminated lubricant	Polish and inspect kingpin, replace bushing and seals, then follow specified lubrication procedures
	Incorrect lubricant	Lubricate axle with specified lubricant
	Axle not lubricated at scheduled frequency	Lubricate axle at scheduled frequency
	Incorrect lubrication procedures	Use correct lubrication procedures
	Lubrication interval not compatible with operating conditions	Change lubrication interval to match operating conditions
	Worn or missing seals	Replace worn or missing seals
Vibration or shimmy of front axle during operation	Caster out of specification	Check ride height prior and adjust caster to specification
	Wheels and/or tires out of balance	Balance or replace wheels and/or tires
	Worn shock absorbers	Replace shock absorbers
	Worn suspension components	Replace/repair per vehicle manufacturer's procedure
	Broken engine mount	Replace engine mount
	Wheel bearing adjustment	Adjust wheel bearing to the vehicle manufacturer's specifications.
Excessive wear on tires or uneven tire tread wear	Tires have incorrect air pressure	Adjust tire pressure to manufacturer's specification.
	Tires out of balance	Balance or replace tires
	Incorrect tandem axle alignment	Align tandem axles
	Incorrect toe setting	Adjust toe-in to manufacturer's specification
	Incorrect steering arm geometry	Repair steering system as necessary
	Worn kingpin bushings	Replace kingpin bushings
	Excessive wheel bearing end play	Check specified wheel nut torque, replace worn or damaged wheel bearings
	Wheel bearing adjustment	Adjust wheel bearing to the vehicle manufacturer's specifications.
Tie rod ends are worn and require replacement	Tie rod ends need lubrication	Lubricate tie rod end. Make sure lubrication schedule is followed.
	Severe operating conditions	Increase frequency of inspection and lubrication intervals
	Damaged boot on tie rod end	Replace tie rod end

STEERTEK

TROUBLESHOOTING GUIDE (CONTINUED)

CONDITION	POSSIBLE CAUSE	CORRECTION
Vehicle is hard to steer	Low pressure in the power steering system	Repair power steering system
	Steering linkage needs lubrication	Lubricate steering linkage
	Steering knuckles are binding	Check vertical clearance
	Incorrect steering arm geometry	Repair steering system as necessary
	Caster out of specification	Check ride height prior and adjust caster to specification
	Tie rod ends hard to move	Replace tie rod ends
	Worn thrust bearing	Replace thrust bearing
	Steering gear box internal problem	Perform steering gear trouble shooting procedures per steering gear manufacturing guidelines.
Bent or broken cross tube, tie rod end ball stud or tie rod end NOTE: Damaged components require replacement	Pump/gear relief valve pressure setting exceeds system specifications	Adjust power steering system to manufacturer's specified pressure
	Steering gear poppets improperly set or malfunctioning	Check for proper operation or adjust poppets to OEM specifications
	Axle stops improperly set	Set axle stops to OEM specifications
	Severe duty cycle service	Increase frequency of inspection and lubrication intervals
Worn or broken steering ball stud	Drag link fasteners lightened past specified torque	Tighten drag link fasteners to the specified torque
	Lack of lubrication or incorrect lubricant	Lubricate linkage with specified lubricant
	Power steering stops out of adjustment	Adjust steering stops to OEM specifications
Restricted steering radius	Steering stops not adjusted correctly	Adjust steering stops to achieve correct wheel cut
Vehicle wanders	Caster out of specifications	Check ride height prior and adjust caster to specification
	Incorrect toe setting	Adjust toe to specification
	Fifth wheel not greased	Grease fifth wheel
	Air in the power steering system	Remove air from the power steering systems
	Rear ride height out of adjustment	Adjust ride height to specification
	Front ride height out of adjustment	Adjust ride height to specification

SECTION 11
Torque Specifications

HENDRICKSON RECOMMENDED TORQUE VALUES PROVIDED IN FOOT POUNDS

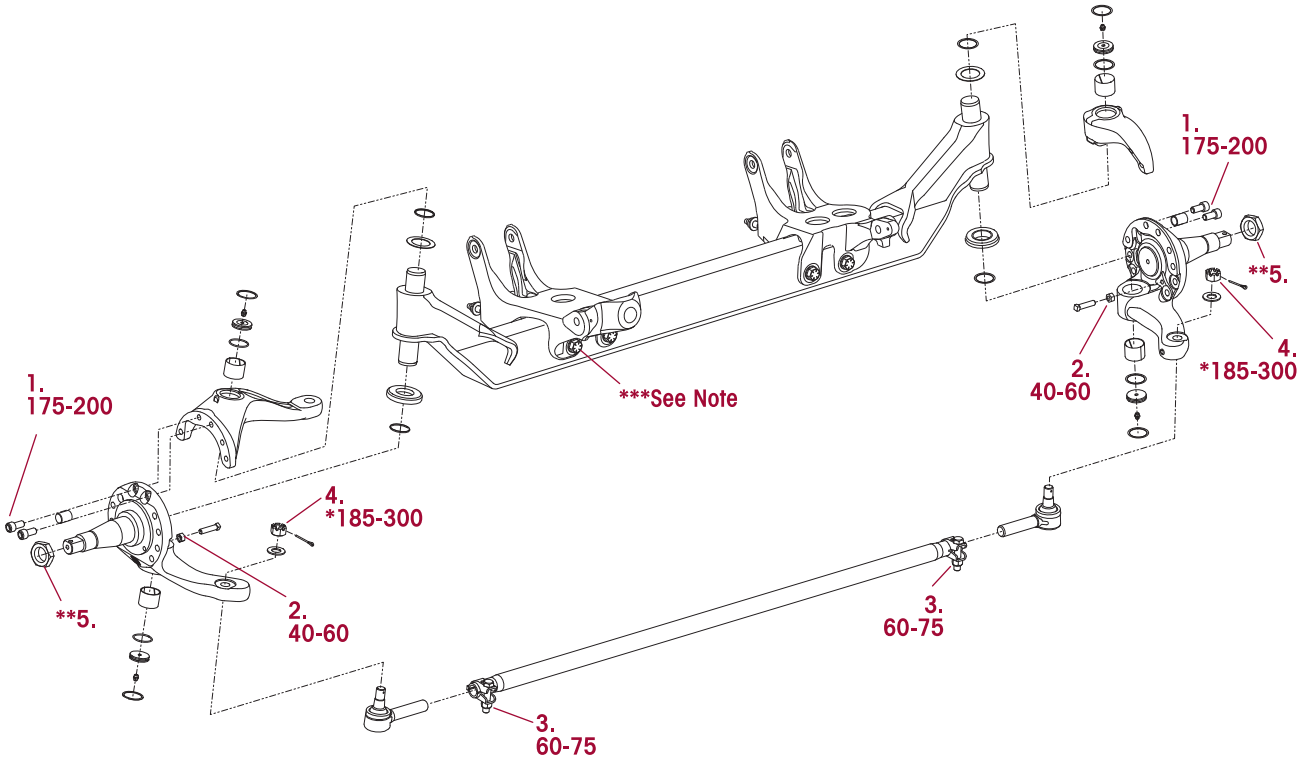

STEERTEK				
HENDRICKSON RECOMMENDED TORQUE SPECIFICATIONS				
NO.	**COMPONENT**	**QUANTITY**	**SIZE**	**TORQUE (in foot pounds)**
1	Knuckle Attachment Bolt (Socket Head Cap Screw)	4	5/8"	175-200
2	Knuckle / Axle Wheel Stop Bolt	2	5/8" Jam Nut	40-60
3	Tie Rod Tube to Tie Rod Ends	2	5/8"	60-75
4	Tie Rod Ends / Drag Link to Steering Knuckle	2	7/8" Castle Nut	*185-300
5	Inner Wheel Bearing Adjusting Nut	2	1½"	**

• All hardware ¼" and greater is Grade 8 with no additional lubrication.

NOTE:

* Torque to 185 foot pounds, advance nut to next hex face to install cotter pin. Do not back off nut for cotter pin installation.

** Contact vehicle manufacturer. Torque value based on wheel end hardware.

*** Warranty voided if fasteners are loosened, torqued/re-torqued, replaced or tampered with in any way.

SECTION 12
Front Alignment Specifications

STEERTEK

AXLE ALIGNMENT SPECIFICATION

CAMBER[1]	DESIGN SPECIFICATION	RANGE	
		MINIMUM	MAXIMUM
LEFT	0.0º ± 1.0º	-1.0º	+1.0º
RIGHT	- 0.25º ± 1.0º	-1.25º	+0.75º
CROSS	0.25º ± 1.0º	-0.75º	+1.25º

CAMBER NOTES:

[1] The camber angle is not adjustable. Do not bend axle or otherwise try to adjust camber. If found out of specification, notify Hendrickson Tech Services for further information.

Hendrickson recommends following TMC[2] practices:

	DESIGN SPECIFICATION[1]	RANGE	
		MINIMUM	MAXIMUM
TOTAL TOE[2]	1/16" ± 1/32" (0.06" ± 0.03")	1/32" (0.03")	3/32" (0.09")

TOE-IN NOTES:

[1] Toe-in is to be set and adjusted in the normal vehicle unladed configuration. Actual vehicle curb weight on the ground. Toe should be checked at the tires front and rear tread center, at a distance above ground equal to the tire's rolling radius.

[2] In most instances total toe is set by the vehicle manufacturer or body builder. Consult the vehicle manufacturer for specifications.

Reference Material

This technical publication covers Hendrickson Truck Suspension Systems' recommended procedures for our parts/products. Other components play a major role in overall performance and Hendrickson recommends you follow the specific vehicle manufacturer's recommendation for care and maintenance. Some recommended practices have been developed by The Technology & Maintenance Council (TMC) and Hendrickson supports these recommendations. We have compiled a list of these below.

TMC

To obtain copies of the following RP's, video's, or charts, contact TMC at:

TMC/ATA
2200 Mill Road
Alexandria, VA 22314

Phone: 703-838-1763
website: tmc.truckline.com
online ordering: www.truckline.com/store

Important References

TMC RP 214B	Tire/Wheel End Balance and Runout
TMC RP 216	Radial Tire Conditions Analysis Guide
TMC RP 219A	Radial Tire Wear Conditions and Causes
TMC RP 222A	User's Guide To Wheels and Rims
TMC RP 230	Tire Test Procedures for Tread Wear, Serviceability, and Fuel Economy
TMC RP 514	Pre-Alignment Inspection
TMC RP 618	Wheel Bearing Adjustment Procedure
TMC RP 620B	Front End Alignment Steering Geometry
TMC RP 708A	Trailer Axle Alignment
TMC RP 642	Guidelines For Total Vehicle Alignment
TMC RP 644	Wheel End Conditions Analysis Guide
TMC RP 645	Tie Rod End Inspection and Maintenance Procedure
Video's	
TMC T0326	Wheel End Maintenance
TMC T0372	Tire Pre-Trip Inspection Guidelines
Other	
TMC T0400	Wheel bearing Adjustment Procedure Wall Chart

Technical Procedure Publication Quiz

1) What three items have the greatest influence on tire wear?
   a) Toe
   b) Air Pressure
   c) Camber
   d) Thrust Angle

2) Caster may be increased or decreased using shims or wedges.
   True or False

3) Cross caster may be changed using shims or wedges.
   True or False

4) You may bend a STEERTEK axle to correct for improper camber settings.
   True or False

5) In an unladen vehicle the correct toe setting for the STEERTEK axle is?
   a) 0 to negative $^1/_8$"
   b) 0 to negative $^1/_{16}$"
   c) 0 to positive $^1/_{32}$"
   d) Positive $^1/_{16}$" ± $^1/_{32}$"

6) When reducing wheel cut on the STEERTEK axle it is necessary to check the steering gear box poppets.
   True or False

7) For a vehicle equipped with a STEERTEK axle it is an acceptable practice to tow using a tow chain wrapped around the axle.
   True or False

8) To remove the STEERTEK knuckle you must.
   a) Drive the kingpin out of the axle bore.
   b) Remove the locking pins before driving the kingpin out.
   c) Remove the two $^5/_8$" socket head cap screws and separate the knuckle assembly.
   d) None of the above.

9) What is the maximum allowable specification for lateral movement of the steering knuckle?
   a) 0.001"
   b) 0.075"
   c) 0.030"
   d) 0.015"

10) Worn kingpins are easily removed and replaced.
    True or False

11) Although the STEERTEK is low maintenance, it is recommended to do a visual inspection on the axle every _____ miles.
    a) 100,000 or 1 year
    b) 50,000 or 6 months
    c) Never

12) How many grease points are there on the STEERTEK axle?
    a) 2
    b) 6
    c) 8
    d) None

13) Prior to performing a total vehicle alignment the following components must be inspected.
    a) Front and rear spring mounts
    b) Steer axle tires
    c) Tie rod ends
    d) All of the above

14) Wheel bearing adjustment has no impact on tire wear.
True or False

15) Prior to steering knuckle re-assembly it is critical that residual Loctite is removed and reapplied from the upper kingpin connection.
True or False

16) If the kingpin bushing is worn, then both bushings on that knuckle need to be replaced.
True or False

17) The unique packaging of the steering knuckle will allow up to _____ degrees of wheel cut on the STEERTEK axle.
a) 50°
b) 32°
c) 87°
d) None of the above

18) A pre-alignment inspection reveals a tie rod end is worn out of specification. What is the correct action needed to complete the alignment.
a) Fill the tie rod with grease to absorb excessive play.
b) Replace the tie rod and reset toe before alignment.
c) Perform alignment and then replace tie rod end and reset toe.
d) Align vehicle and do not repair tie rod end.

19) The seal on the thrust bearings are installed facing down.
a) True
b) False
c) Doesn't matter

20) When servicing tie rod ends it is not necessary to have the part number located on the tie rod tube to order tie rod service kits.
True or False

CERTIFICATE

Hendrickson will provide a personalized STEERTEK Technical Procedure Quiz Achievement Certificate to candidates scoring 80% or higher on the test. Simply complete the test and fill in the enclosed answer sheet or write your answers on a separate sheet with the return address, name, phone number, and company name as it will appear on the award to:

Hendrickson
ATTN: Truck Marketing Test Quiz Assessment
800 S. Frontage Road
Woodridge, Illinois 60517

HENDRICKSON

Truck Suspension Systems
800 South Frontage Road
Woodridge, IL 60517-4904 USA

630.910.2800
Fax 630.910.2899

Information contained in this literature was accurate at the time of publication. Product changes may have been made after the copyright date that are not reflected.
© 2008 Hendrickson USA, L.L.C. (U.S. Rights) Hendrickson International Corporation (Rights Outside U.S.) All Rights Reserved

17730-258 Rev B 12-08

Printed in United States of America